T. F. MEUSCH.
CHECK PROTECTOR.
APPLICATION FILED MAY 19, 1916.

1,209,606. Patented Dec. 19, 1916.

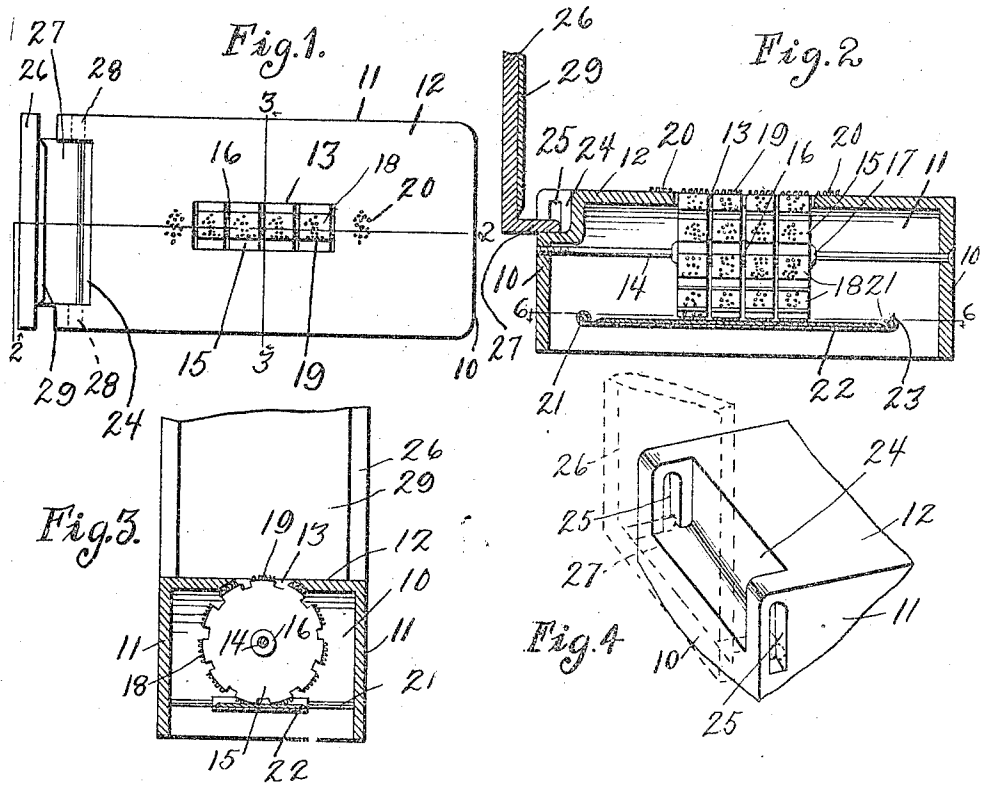
Fig.1.
Fig.2
Fig.3.
Fig.4

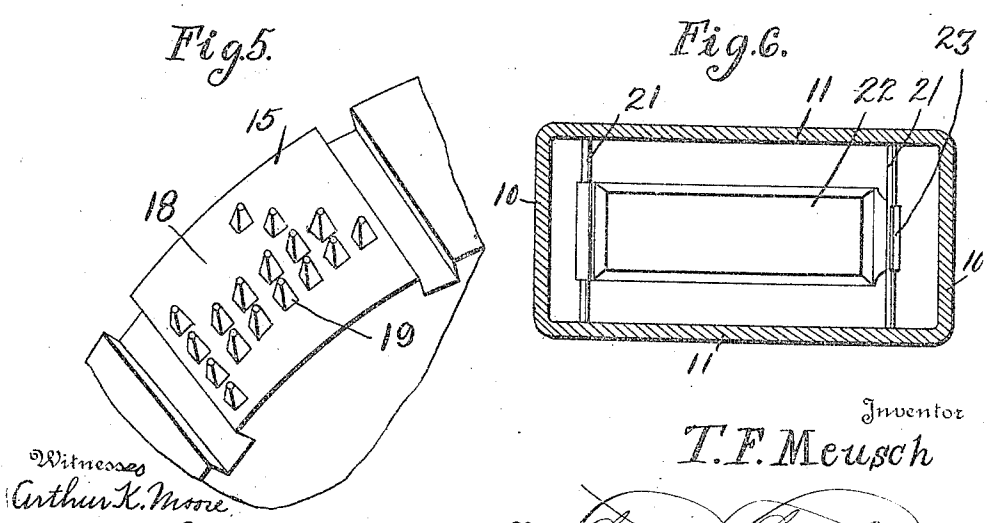
Fig.5.
Fig.6.

Witnesses
Arthur K. Moore
L. N. Gillis

Inventor
T. F. Meusch

By Chandler Chandler

Attorneys

UNITED STATES PATENT OFFICE.

THEODORE F. MEUSCH, OF WINNFIELD, LOUISIANA.

CHECK-PROTECTOR.

1,209,606. Specification of Letters Patent. Patented Dec. 19, 1916.

Application filed May 19, 1916. Serial No. 98,635.

To all whom it may concern:

Be it known that I, THEODORE F. MEUSCH, a citizen of the United States, residing at Winnfield, in the parish of Winn, State of Louisiana, have invented certain new and useful Improvements in Check-Protectors; and I do hereby declare the following to be a full, clear, and exact description of the invention, such as will enable others skilled in the art to which it appertains to make and use the same.

This invention relates to canceling or stamping devices and has special reference to a check protector.

The principal object of the invention is to provide an improved form of device of this description which is of such a compact character that it may be readily carried in the pocket and yet which may be as efficacious as the large and complicated machines usually used for the purpose.

A second important object of the invention is to provide a machine of this character which will not only effect punching of characters through a check or the like but will at the same time color the portions of the check about the perforations.

A third important object of the invention is to provide a device of this character wherein the platen will be so constructed as to constitute a top or cover for the device and wherein such platen will be so attached to the body or base of the device that it will press evenly all over the slip of paper inserted between the base and platen no matter what the variations in thickness of such strips may be.

With the above and other objects in view, as will be hereinafter apparent the invention consists in general of certain novel details of construction and combinations of parts hereinafter fully described, illustrated in the accompanying drawings, and specifically claimed.

In the accompanying drawings, like characters of reference indicate like parts in the several views, and Figure 1 is a plan view of the device with the platen or cover thrown back; Fig. 2 is a section on the line 2—2 of Fig. 1; Fig. 3 is a section on the line 3—3 of Fig. 1; Fig. 4 is a detail view showing the pin and slot connection of the platen with the base of the device; Fig. 5 is a perspective view of a portion of one of the number wheels greatly enlarged to show the form of the projection used in cutting through the check; Fig. 6 is a sectional view on the line 6—6 of Fig. 2.

In the embodiment of the invention herein disclosed there is provided a base which is in the form of a casing having end members 10 and side members 11. This casing is furthermore provided with a top 12 and in this top 12 is a slot 13 which extends longitudinally of the top. Fixed in the end walls 10 are the ends of a shaft 14, the shaft lying directly below the center of the slot. Mounted on the shaft 14 is a series of number wheels 15 which are held in spaced relation by means of washers 16, the wheels being properly positioned on the shaft by means of collars 17 at each end of the series of wheels. On the peripheries of these wheels are raised portions 18 and projecting from these raised portions are the punching members which serve to penetrate a check or the like and which are preferably arranged in two rows as shown in Fig. 5 at 19. Each of these members is preferably pyramidal in form with the apex of the pyramid slightly blunted as can also be seen with reference to said Fig. 5. These punching members 19 project through the slot 13 and form a portion of the periphery of the wheel so that the wheels may be spoken of as having portions of their peripheries projecting through said slots. At each end of the slot I prefer to provide a raised character 20, here shown as a dollar mark, ($) to indicate the value of the figures following and preceding the character. These marks are made in the same manner as the figures on the number wheels, that is to say by raised pyramidal points.

It is to be noted that the number wheels are provided with eleven characters, the characters running from zero to nine (0–9) and then an eleventh character for indicating a blank space so that raising of a check is prevented. This blank space is provided with a multiplicity of the points 19 and thus when the check is punched with this multiplicity of points a number of points arranged in the form of a numeral cannot be used without giving plain indication of the effort to raise the check.

Extending between the sides 11 of the casing is a pair of bars or rods 21 and pivoted to one of these rods is an ink pad 22 preferably formed of a thin strip of metal suit-

ably covered with an absorbent fabric to receive the ordinary stamping ink. It is preferable that this stamping ink be of the indelible type as this will greatly aid in the prevention of raising of the checks. The other end of this ink pad is held to the remaining bar 21 by means of a spring clip 23 so that the ink pad may be swung down below the open bottom of the casing in order to renew the supply of ink. The ink pad is so positioned that the points of the members 19 will rub over the pad as the wheels 15 are rotated.

One end of the casing is bent to provide a rabbeted portion 24 and the sides at the ends of this rabbeted portion are provided with vertically disposed slots 25.

At 26 is indicated the body of the platen and extending downward from one end of this platen is a flange 27 which fits between the sides 11 at the rabbeted end of the casing. Across the bottom of this flange 27 extends a bar 28 which projects beyond the flange to provide journal ends fitting in the slots 25. By this means, the platen, while hingedly connected to the casing, has a certain amount of vertical bodily movement so that when paper of different thicknesses is used the platen may be kept at all times parallel to the top of the casing. Beneath this platen is provided a thin rubber pad 29 which is fixed firmly to the platen and serves as the surface against which the check rests during the operation of punching or canceling.

In using the device, the wheels are first inked by rotating all of the wheels until all of the numerals have been passed over the inking pad. The wheels are then moved until the number of dollars for which the check is drawn appears through the opening 13, the proper number of blanks or blank indications being also exposed. For instance, with four wheels as indicated, any amount less than one-hundred dollars ($100) would have two blanks exposed. The platen, of course, has been folded back in order to permit observation of the numbers. The check is now placed in such position that the numbers will be alined with the blank space on the check used for such numbers and the platen closed down thereon. A slight pressure with the hand will then punch the check and at the same time the ink will color the rims of the punched holes.

It is to be observed that the holes punched are ragged and no paper is removed so that it becomes difficult to fill up these holes.

There has thus been provided a simple and efficient device of the kind described and for the purpose specified.

It is obvious that many minor changes may be made in the form and construction of the invention without departing from the material principles thereof. It is not therefore desired to confine the invention to the exact form herein shown and described but it is wished to include all such as properly come within the scope claimed.

What is claimed is:—

1. In a check protector, a hollow base having a top provided with a slot, said base having at one end adjacent the top a pair of ears provided with vertically elongated openings, a platen having a downturned end flange extending over the ear provided end of the base and lying between said ears, journal ends formed on said flange and rotatable and slidable in said slots, and number wheels rotatably mounted in the base and having portions on their peripheries projecting through the first slot.

2. In a check protector, a hollow base having a top provided with a slot, said base having at one end adjacent the top a pair of ears provided with vertically elongated openings, a platen having a downturned end flange extending over the ear provided end of the base and lying between said ears, journal ends formed on said flange and rotatable and slidable in said slots, number wheels rotatably mounted in the base and having portions of their peripheries projecting through the first slot, spaced bars in said base and extending between the side walls thereof, an inking pad pivoted to one of said bars and engageable with the peripheries of the wheels, and a catch carried by the free end of the pad and detachably engageable with the other bar.

3. In a check protector, a stamping character formed from a series of punching projections each consisting of a truncated pyramid having its truncated end parallel to its base to provide an ink carrying surface.

In testimony whereof, I affix my signature, in the presence of two witnesses.

THEODORE F. MEUSCH.

Witnesses:
S. E. Tousley,
B. F. Harrop.