June 19, 1951 O. J. RAINVILLE 2,557,687

BAFFLE TYPE EXHAUST SILENCER

Filed April 27, 1948 2 Sheets-Sheet 1

Fig. 1.

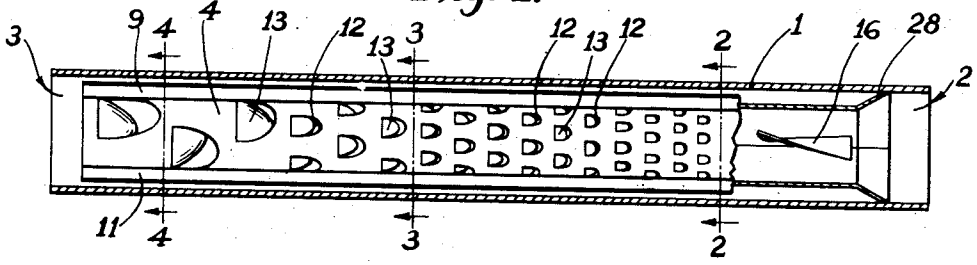

Fig. 4.

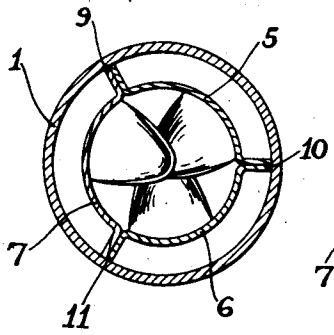

Fig. 3.

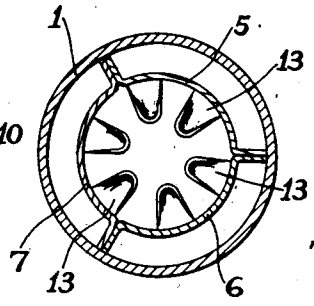

Fig. 2.

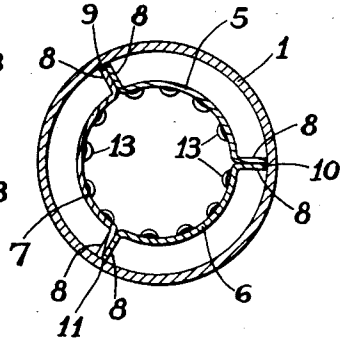

Fig. 6.

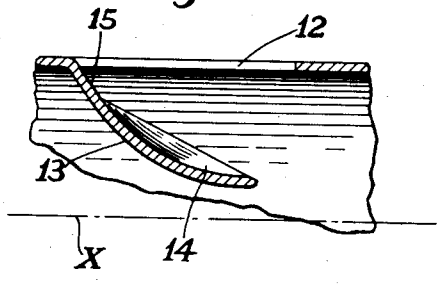

Fig. 5.

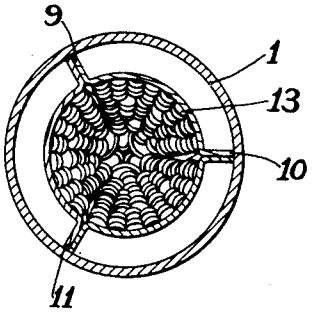

Fig. 7.

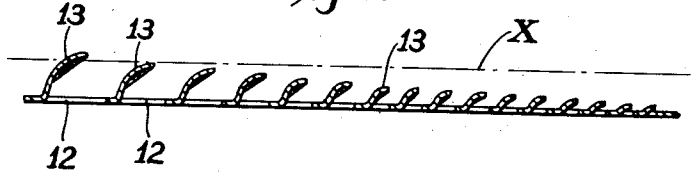

INVENTOR.
Omer J. Rainville
BY
Townsend M. Gunn.
Attorney.

June 19, 1951 O. J. RAINVILLE 2,557,687

BAFFLE TYPE EXHAUST SILENCER

Filed April 27, 1948 2 Sheets-Sheet 2

Fig. 9.

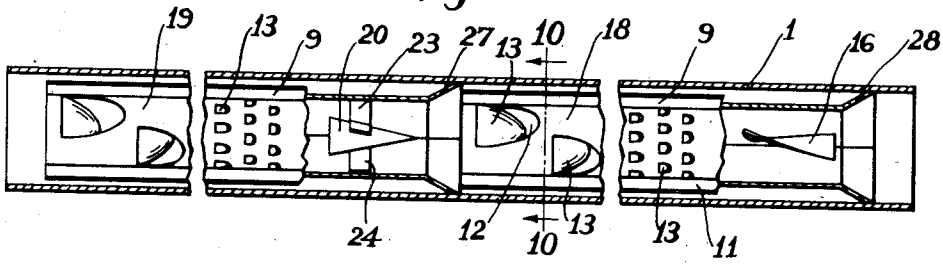

Fig. 10.

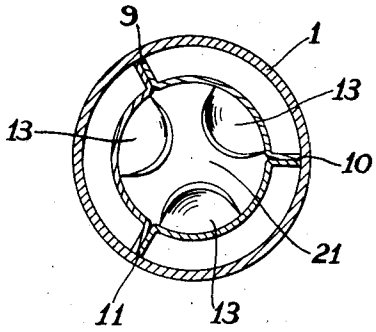

Fig. 8.

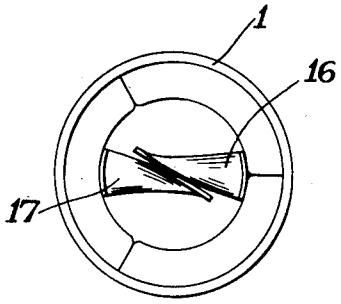

Fig. 11.

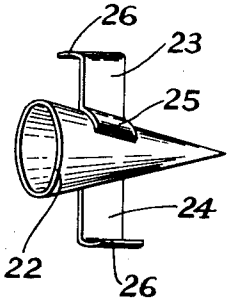

INVENTOR.
Omer J. Rainville
BY
Townsend M. Gunn
Attorney.

Patented June 19, 1951

2,557,687

UNITED STATES PATENT OFFICE

2,557,687

BAFFLE TYPE EXHAUST SILENCER

Omer J. Rainville, Attleboro, Mass.

Application April 27, 1948, Serial No. 23,413

10 Claims. (Cl. 181—70)

1

This invention relates to certain new and useful improvements in exhaust silencers of the type generally employed with internal combustion engines for silencing or muffling the discharge of products of combustion from such engines, and also relates to certain new and useful component parts of said silencers.

Among the several objects of the invention may be noted the provision of a new form of exhaust silencer of the class described which is so constructed as to give a maximum of silencing effect while presenting a minimum of interference to the gases passing through it; the provision of a new form of exhaust silencer so arranged in its component parts as to effectively silence so-called "back-fires" from the engine; the provision of an exhaust silencer of the class described which is simple to construct and which because of its simplicity may be readily adapted to existing types of internal combustion engines; the provision of a component part for an exhaust silencer which may readily be inserted in the exhaust tubes of internal combustion engines which are ordinarily not equipped with silencers, thereby to muffle and silence effectively the exhaust noise of such engines; and the provision of an exhaust silencer, and its component parts, which is economical to construct and efficient in its operation. Other objects will be in part obvious and in part pointed out hereinafter.

The invention accordingly comprises the elements and combinations of elements, features of construction, and arrangements of parts which will be exemplified in the structures hereinafter described, and the scope of the application of which will be indicated in the following claims.

In the accompanying drawings, in which are illustrated several of the various possible embodiments of the invention:

Figure 1 is a longitudinal sectional view of one form of the exhaust silencer of the present invention;

Figures 2, 3, and 4 are cross-sectional views taken on lines 2—2, 3—3, and 4—4 respectively of Figure 1;

Figure 5 is an end perspective view looking into the silencer of Figure 1 from line 2—2;

Figure 6 is a longitudinal sectional view of one of the flutes of the present invention;

Figure 7 is a fragmentary longitudinal cross-section of a part of this invention, in order to show more clearly certain relationship of parts;

Figure 8 is an end view of Figure 1, to illustrate more clearly certain portions of the silencer;

Figure 9 is a cross-sectional broken view to

2

illustrate another embodiment of this invention;

Figure 10 is a cross-sectional view taken along lines 10—10 of Figure 9; and

Figure 11 is a perspective view of a part of the Figure 9 embodiment, to show more clearly certain features of construction.

Similar reference characters throughout the drawing are used to designate similar elements.

In hitherto designed exhaust silencers, there have been attempts made to accomplish the three main requirements of a silencer, viz., (1) effective muffling or silencing of the regular exhaust noise of the internal combustion engine, as well as that form of noise called a "back-fire"; (2) silencing without setting up any appreciable back pressure; and (3) long life, which life is shortened by, for example, condensation vapors remaining in the silencer and corroding the material of which the silencer is made. An additional requirement is that the silencer be as simple as possible, with a minimum of parts to get out of order or to fail.

It is the general purpose of this invention to provide a silencer which meets these requirements to the extent required. The manner in which it does will now be explained by referring to the accompanying drawings, as follows:

Referring to Figure 1, there is shown at 1 the outside casing of the exhaust silencer. Casing 1 is tubular, preferably cylindrical in shape, but may have other shapes in cross-section if desired, such as hexagonal, for example. It will be noted that casing 1 is open throughout its length, and that it has an inlet or forward end indicated generally by 2 and an exit end indicated generally by 3.

Mounted within casing 1 is a gas dissipator element comprising a tubular shell indicated generally by 4. Shell 4 may be made of one piece, if desired, but for ease in stamping certain perforations in the shell (later to be described), I prefer to use a 3-piece construction as shown by the cross-sectional views, Figures 2, 3 and 4. As shown, shell 4 is made up of three elongated members 5, 6 and 7, each member being as shown and comprising approximately ⅓ the circumference of the shell 4. Members 5, 6 and 7 are formed with turned outward flanges 8 thereon, which flanges serve, by means of spot welding or riveting, as means to fasten members 5, 6 and 7 together to form the complete tubular shell 4. Flanges 8 extend outwardly from shell 4 a distance not greater than ¼ the approximate diameter of shell 4, and these joined flanges thus form ribs 9, 10, and 11, running the length of the shell and serving as spacing and mounting means for shell 4 with-

in casing 1. The inside diameter of casing 1 is such that the outer edges of ribs 9, 10 and 11 bear snugly with a good friction fit against the inside wall of casing 1, thus holding shell 4 firmly in place. Shell 4 is provided at its entrance end with an outwardly-flared rim 28 which fits snugly casing 1.

The shell 4 is provided with a series of openings 12 throughout its length, and said openings 12 are preferably arranged in groups, with the openings of each group successively increasing in size toward the exit end of the silencer. The openings of each circular series are in staggered relation with respect to the openings in adjacent series.

Projecting inwardly toward the center of shell 4 are flutes 13, each of said openings 12 having one flute attached to that portion of its edge which is toward the exit end 3 of the silencer. It will be noted, as shown in Figures 2, 3, 4, and 7, that said flutes gradually increase in size in a direction toward the exit end 3 of the silencer, and in the same direction the free ends of the flutes gradually approach the longitudinal axis line of the shell 4 (said axis line being represented by the dot and dash line X), eventually to project beyond the said axis line as to the flutes adjacent the exit end of the shell 4. It will also be noted that said flutes incline forwardly, and while I prefer to form the flutes 13 as an integral part of shell 4 by striking the flutes inwardly in the production of said openings 12, nevertheless, the flutes may be formed separately and attached to the shell in their proper positions as by spot welding or riveting, if desired.

Figure 5 illustrates the perspective appearance of the silencer if looking into the entrance end, and illustrates the above-mentioned staggering of openings 12 to provide overlapping of the flutes as to any gases flowing against the flutes.

Flutes 13 are spoon shaped and are so positioned as to be concaved inwardly as shown in Figure 6, which is an enlarged drawing for purposes of clarity. The forward portion (indicated at 14) of each flute is narrower than the rearward portion (indicated at 15) attached to shell 4. I have found that by making the flutes spoon shaped and concaved inwardly as shown, each flute scoops out of the exhaust gas flowing past it a portion and directs substantially all of that portion outward through the respective opening and to the inside wall of casing 1. By doing this the sound energy of the gas is effectively dissipated. When the flutes are flat, not spoon shaped, not all of the gas hitting the flute comes out, and furthermore, the gas coming out is not completely directed so as to impinge on the wall of casing 1. Thus, the spoon-shaped flute is far more silencing than the flat flute. Furthermore, it will be noted that since the size of any opening 12 through which the scooped portion of gas must be expelled, increases in a backward direction, and since the back portion of the flute is wider than the front, then as the scooped gas is deflected outwardly, it meets with lesser and lesser resistance. As a result of this, the gas to be expelled has a very free passageway outward, and the net effect of this is to give a greater muffling effect with less back pressure than is experienced in prior silencers.

While I do not know exactly why the particular form of dissipator works, I am led to believe by my experiments that the smaller forward flutes collect the high-speed, and hence high-pitched, exhaust gases and dissipate their energy outward, while the larger flutes toward the rear collect the lower-speed, lower-pitched gases. Also, since the impediment offered by the flutes to the flow of gas increases (due to their increase in size and greater angularity) as the velocity of the gas decreases in going from entrance end to exit end of the dissipator 4, all portions of the dissipator tend to operate at maximum efficiency and hence the muffling effect is very pronounced even with a short dissipator.

It will be noted that the flutes adjacent the exit end of the dissipator preferably overlap as shown in Figure 4, thus offering the greatest impediment to the flow of gas. Since these last-mentioned flutes do not touch each other, being displaced axially, it is to be noted that the dissipator cannot be considered to be completely closed at its exit end, and thus very low-speed gases, having little or no noise value, can pass around those flutes to emerge from within the dissipator. However, this overlapping of said flutes will be spoken of hereafter as resulting in a "closed" end, in contrast to end flutes which do not overlap, and hence result in an open central passageway 21, as shown in Figure 10, through the dissipator, which type will be called an "open" end.

In the forward end of dissipator shell 4, either by welding or riveting or other suitable means, I prefer to mount two gas deflectors 16 and 17, made of sheet metal and formed, as shown in Figures 1 and 8, so as to have a longitudinally partially spiral shape. These deflectors approach each other at the center of the dissipator, and thus lie for a portion of their lengths in the stream of gases flowing into the dissipator. Because of their spiral forward twist, each deflector tends to deflect a portion of the central gas stream outwardly toward the wall of the dissipator, where the stream at high pressure and low volume can be acted upon by the first series of flutes 13, which are purposely made small to silence high-pressure gases.

As specified above, the height of the spacing and supporting ribs 9, 10 and 11 is such that the spacing between the outside periphery of dissipator shell 4 and the inner periphery of outside casing 1 is not more than ¼ the diameter of shell 4. I have found that if this spacing is not more than specified, effective muffling will be ensured with a minimum of back pressure. The muffling effect will increase as the said spacing is made smaller, but a point is eventually reached at which the back pressure begins to increase to a point which is objectionable. As the spacing is made larger, the back pressure will decrease, but the muffling effect becomes less. In practice, a silencer constructed so that the outer periphery of shell 4 is 1⅛ inches in diameter and the inner diameter of casing 1 is 1½ inches, has been found to be very satisfactory.

Since there are no transverse walls in the above described silencer, it is obvious that no pockets are formed to entrap condensation products resulting from the exhaust vapors. Any such condensation products are free to drain from casing 1, and as a result this construction provides a long life with a less amount of corrosion than has hitherto been experienced in other types of mufflers.

Referring now to Figure 9, I have shown another preferred embodiment of my invention which I have found useful in cases where the simpler form already described is not as effective as desired. As before, an outside casing 1 is pro-

vided, and mounted within it in the manner aforesaid are two dissipator shells 18 and 19, and a gas expander indicated generally at 20. Said dissipator shells 18 and 19 follow the construction already described for shell 4. However, it is to be noted that while shell 19 is of the "closed" end type like shell 4, shell 18 is of the "open" end type. That is, as shown in Figure 10, the flutes adjacent the exit end of shell 18 do not overlap, and thus an open central bore or passageway 21 is provided throughout the length of shell 18. The purpose of this is to permit the passage through shell 18 of the high-speed exhaust gases resulting from a "back-fire" in the exhaust manifold of the internal combustion engine. Upon emergence from the central bore of dissipator 18, these high-speed gases strike the apex of gas expander 20, and are deflected outward to the wall of dissipator 19. In this position said gases can be acted upon by the first series of flutes of shell 19. The gas expander 20 also serves to slow down these high-speed gases, and thus give the flutes of dissipator 19 a longer time to act upon them. Gas expander 20 is preferably slightly smaller in diameter at its base than dissipator 18.

I have shown in perspective view in Figure 11 a preferred form of gas expander 20. A substantially conical shell 22, either hollow or solid, is formed. Attached to it near its base are two supports 23, and 24, preferably being thin in cross section so as to offer minimum impedance to gases flowing past them. Said supports 23 and 24 may preferably be made of sheet metal. The lower end 25 of each support 23 and 24 is bent over and attached to expander 20, as by spot welding, and the top 26 of the support is bent over to fit the inside of shell 19, as shown. Ends 26 are then spot welded, brazed, or riveted to hold expander 20 in its proper place in the entrance end of shell 19.

In assembly, shell 18 is inserted in casing 1, and shell 19 is then inserted until its inner flared end 27 comes in line, approximately as shown, with the exit end of shell 18. Shells 18 and 19 are, as before, held tightly in place, by friction fit, in casing 1.

The operation of the double silencer is as follows: Exhaust gases enter the right (as shown) end of casing 1 and are first deflected by deflectors 16 and 17. As the gases pass down the length of shell 18, the aforesaid flutes 13 scoop out gases in progressively greater amounts and directively deflect these scooped-out portions to the wall of casing 1. Any gases which escape this, as well as high-speed "back-fire" gases, emerge centrally from dissipator 18 to strike expander 20. They are deflected outwardly toward the wall of the dissipator shell 19 and traverse its length, wherein they are further dissipated and silenced.

For silencing the exhausts of motor cycles or other engines, a dissipator shell similar to shell 4 may be constructed and inserted in the exhaust pipe of the motor cycle. If the proper spacing has been followed, it will be found that the usual noisy exhaust is effectively reduced.

It is to be understood that the principle of this Figure 9 embodiment may be extended by providing more than two dissipators concentrically aligned as shown. While two is generally satisfactory, further muffling effects may be obtained by adding more dissipators.

Since many departures may be made from the embodiments shown herein without departing from the spirit and scope of the invention, it is to be understood that all matter set forth herein or shown in the accompanying drawings is to be considered as illustrative and not in a limiting sense.

I claim:

1. A dissipator adapted for use in an exhaust silencer comprising a tubular shell having a series of apertures in the wall thereof, and forwardly-inclined inwardly-directed flutes projecting from the edges of said apertures, said flutes being spoon shaped and concaved inwardly with the forward portion of each of said flutes being narrower than that portion of the flute attached to the edge of the aperture, and said apertures and their respective flutes increasing in size in a direction toward the outlet end of said shell.

2. A dissipator adapted for use in an exhaust silencer, comprising a tubular shell having a series of apertures in the wall thereof, and forwardly-inclined inwardly-directed flutes projecting from the edges of said apertures, said flutes being spoon shaped and concaved inwardly with the forward portion of each of said flutes being narrower than that portion of the flute attached to the edge of the aperture, said shell having external support means attached thereto for spacing said shell from the wall of said exhaust silencer a distance not greater than ¼ the diameter of said shell.

3. A dissipator adapted for use in an exhaust silencer, comprising a tubular shell having a series of apertures in the wall thereof, and forwardly-inclined inwardly-directed flutes projecting from the edges of said apertures, said flutes being spoon shaped and concaved inwardly with the forward portion of each of said flutes being narrower than that portion of the flute attached to the edge of the aperture, said shell having external support means attached thereto for spacing said shell from the wall of said exhaust silencer, said support means comprising at least three outwardly projecting ribs mounted on said shell and adapted to support said shell centrally within the exhaust silencer in such manner that the spacing between the outside of said shell and the inside of said silencer is not more than ¼ of the diameter of said shell, each of said ribs comprising outwardly turned flanges integral with said shell.

4. An exhaust silencer of the character described comprising an outside casing and a dissipator mounted within said casing concentrically therewith, said dissipator comprising a tubular shell having openings therein gradually increasing in size in a direction toward the exit end of said exhaust silencer, and forwardly-inclined inwardly-directed flutes projecting from the edges of said openings with the forward portion of each flute being narrower than that portion of the flute attached to the edge of its respective opening, said flutes gradually increasing in size in a direction toward the exit end of said exhaust silencer, said casing and said dissipator being spaced apart, throughout their length, by a distance not substantially greater than ¼ the diameter of said dissipator.

5. An exhaust silencer of the character described comprising an outside casing and at least two dissipators mounted within said casing concentrically therewith and in alignment with each other, each of said dissipators comprising a tubular shell having openings therein gradually increasing in size in a direction toward the exit end of said exhaust silencer, and forwardly-inclined inwardly-directed flutes projecting from the edges of said apertures, said flutes being spoon shaped and concaved inwardly with the forward

portion of each flute being narrower than that portion of the flute attached to the edge of the aperture, said flutes likewise increasing in size in a direction toward the exit end of said exhaust silencer, and said casing being spaced apart from each of said dissipators a distance substantially not greater than ¼ the diameter of the dissipators.

6. An exhaust silencer of the character described comprising an outside casing, a first dissipator, and a second dissipator, said first and second dissipators being mounted within said casing concentrically therewith and in alignment with each other, each of said dissipators comprising a tubular shell having openings therein gradually increasing in size in a direction toward the exit end of said exhaust silencer, and forwardly-inclined inwardly-directed flutes projecting from the edges of said openings, said flutes gradually increasing in size in a direction toward the exit end of said exhaust silencer and gradually approaching the axes of said dissipators, said first dissipator being mounted nearest the entrance end of said exhaust silencer and having its central bore open throughout its length, said second dissipator being mounted nearest the exit end of said exhaust silencer and having its central bore substantially restricted by the overlapping, on the axis line, of those flutes adjacent said exit end, said last-named flutes being spaced apart, axially, in order to provide passage-way for low velocity gases.

7. An exhaust silencer of the character described comprising an outside casing, a first dissipator, and a second dissipator, said first and second dissipators being mounted within said casing concentrically therewith and in alignment with each other, each of said dissipators comprising a tubular shell having openings therein gradually increasing in size in a direction toward the exit end of said exhaust silencer, and forwardly-inclined, inwardly-directed flutes projecting from the edges of said openings, said flutes gradually increasing in size in a direction toward the exit end of said exhaust silencer and gradually approaching the axes of said dissipators, said flutes being spoon shaped and concaved inwardly, with the forward portion of each flute being narrower than that portion of the flute attached to the edge of the opening, said first dissipator being mounted nearest the entrance end of said exhaust silencer and having the central part of its bore open throughout its length, said second dissipator being mounted nearest the exit end of said exhaust silencer and having the central part of its bore substantially restricted by the overlapping, on the axis line, of those flutes adjacent said exit end, said last-named flutes being spaced apart, axially, in order to provide passage-way for low velocity gases.

8. An exhaust silencer of the character described comprising an outside casing and a dissipator mounted within said casing concentrically therewith, said dissipator comprising a tubular shell having openings therein gradually increasing in size in a direction toward the exit end of said exhaust silencer, and forwardly-inclined, inwardly-directed flutes projecting from the edges of said openings, said flutes being spoon shaped and concaved inwardly, said casing and said dissipator being spaced apart throughout their length, by a distance substantially not greater than ¼ the diameter of said dissipator, and means mounted adjacent the entrance end of said dissipator for deflecting gases, entering therein, toward the wall of said dissipator.

9. An exhaust silencer of the character described comprising an outside casing, at least two dissipators mounted within said casing concentrically therewith and in alignment with each other, each of said dissipators comprising a tubular shell having openings therein gradually increasing in size in a direction toward the exit end of said exhaust silencer, and forwardly-inclined inwardly-directed flutes projecting from the edges of said openings, said flutes being spoon shaped and concaved inwardly with the forward portion of each of said flutes being narrower than that portion of the flute attached to the edge of the aperture, said flutes gradually increasing in size in a direction toward the exit end of said exhaust silencer and gradually approaching the axes of said dissipators, and a gas expander mounted between the exit end flutes of one of said dissipators and the entrance end flutes of another of said dissipators, for directing exhaust gases against the inside wall of said other dissipator said gas expander comprising a substantially cone-shaped element mounted in alignment with said dissipators and having its apex pointed toward the entrance end of said exhaust silencer.

10. An exhaust silencer of the character described comprising an outside casing, a first dissipator, a second dissipator, said first and second dissipators being mounted within said casing concentrically therewith and in alignment with each other, a gas deflector and a gas expander, said dissipators each comprising tubular shells having openings in the walls thereof gradually increasing in size in a direction toward the exit ends of said dissipators, and forwardly-inclined inwardly-directed flutes projecting from the edges of said openings, said flutes gradually increasing in size in a direction toward the exit ends of said dissipators and gradually approaching the axes of said dissipators, said flutes being spoon shaped and concaved inwardly, said gas deflector comprising at least two spirally-twisted elongate members mounted in the entrance end of said first dissipator and lying for a portion of their lengths in the central bore of said first dissipator thereby to deflect gases entering said entrance end toward the wall of said first dissipator, said gas expander comprising a substantially cone-shaped element mounted in the entrance end of said second dissipator in alignment therewith with its apex pointed toward the exit end of said first dissipator, thereby to deflect gases emerging from said first dissipator toward the wall of said second dissipator.

OMER J. RAINVILLE.

REFERENCES CITED

The following references are of record in the file of this patent:

UNITED STATES PATENTS

Number	Name	Date
624,062	Mattews	May 2, 1899
738,858	Swain	Sept. 15, 1903
788,242	Broga	Apr. 25, 1905
1,182,098	Mayer	May 9, 1916
1,213,558	Turner	Jan. 23, 1917
1,781,001	Eisele	Nov. 11, 1930
1,991,014	Compo	Feb. 12, 1935
1,991,748	Johnson	Feb. 19, 1935
1,998,385	Powell	Apr. 16, 1935
2,065,343	Moore	Dec. 22, 1936
2,213,614	Scarritt	Sept. 3, 1940
2,350,924	Rainville	June 6, 1944