United States Patent [19]

McCaskill, III

[11] **3,820,599**

[45] **June 28, 1974**

[54] **CIRCULATION APPARATUS**

[75] Inventor: **John Walton McCaskill, III,** Houston, Tex.

[73] Assignee: **Rockwell Manufacturing Company,** Houston, Tex.

[22] Filed: **Sept. 1, 1972**

[21] Appl. No.: **285,746**

[52] **U.S. Cl.** **166/.5,** 166/226

[51] **Int. Cl.** **E21b 33/00**

[58] **Field of Search** 166/.5, 226, 208, 85, 86, 166/87, 88; 285/18

[56] **References Cited**

UNITED STATES PATENTS

2,631,000	3/1953	Lee	166/226 X
2,663,307	12/1953	Birdwell	166/226 X
3,216,452	11/1965	Williams	166/226 X
3,494,419	2/1970	Mullins	166/226 X
3,638,725	2/1972	Ahlstone	166/226 X
3,736,984	6/1973	Garrett	166/226 X

Primary Examiner—Henry C. Sutherland
Assistant Examiner—Richard E. Favreau

[57] **ABSTRACT**

The circulation apparatus is a coupling mounted between a riser extending to the drilling rig and a casing string suspended within the well. The apparatus controls the passage of fluids from the flow bore of the riser to the annulus around the riser. The apparatus includes an outer sleeve having circulation ports and an inner sleeve movable axially by rotation of the riser. The inner sleeve controls the passage of fluids through the circulation ports by means of its position relative to the outer sleeve. A pack off containing a compression element is provided as a final seal after the circulation operation is completed.

22 Claims, 8 Drawing Figures

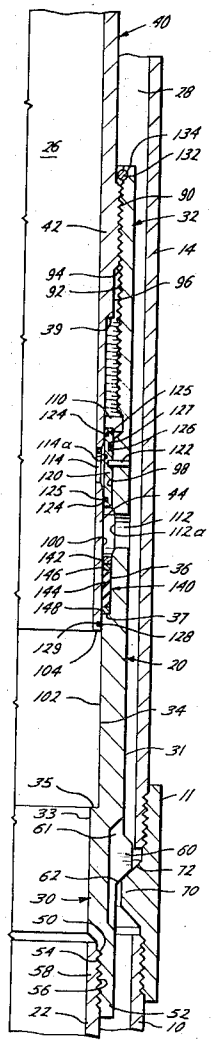

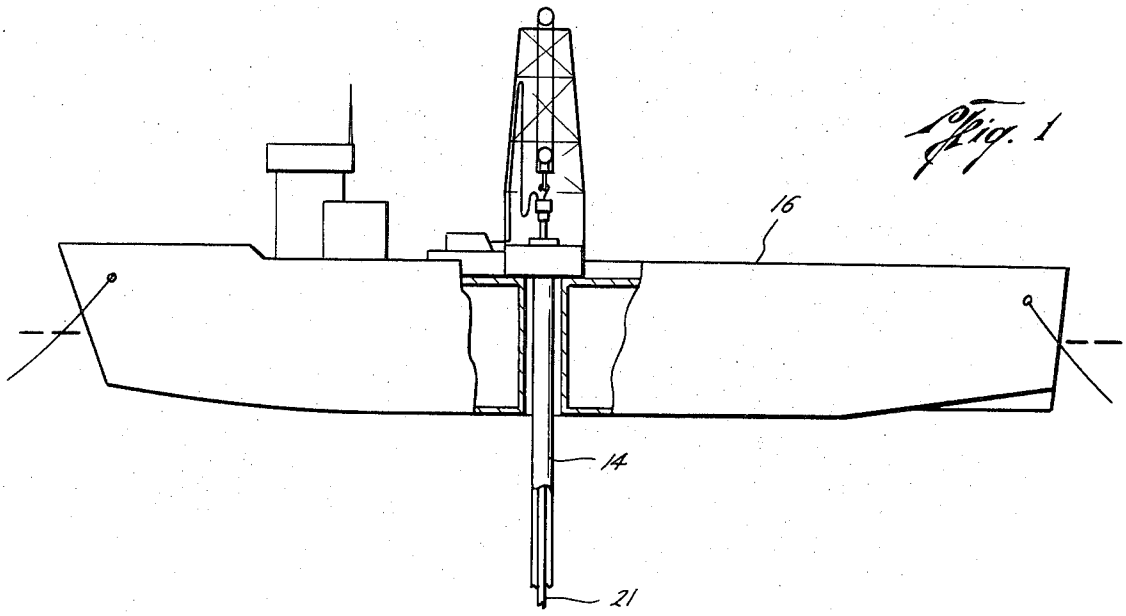

Fig. 1

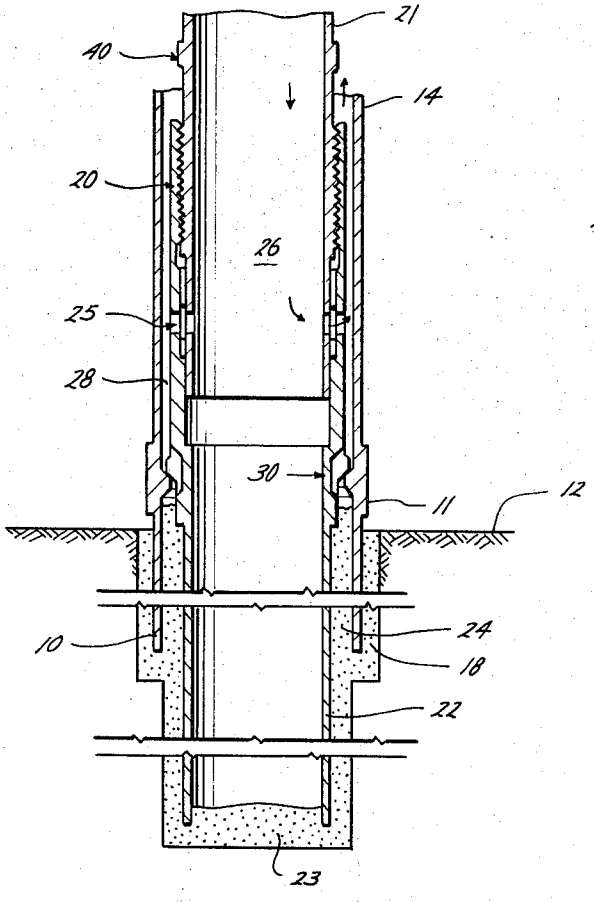

Fig. 2

Fig. 3

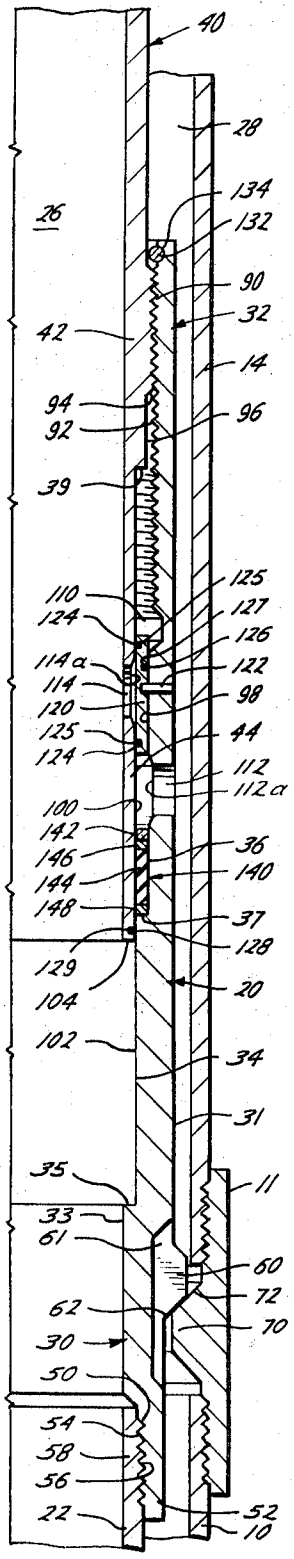

Fig. 4

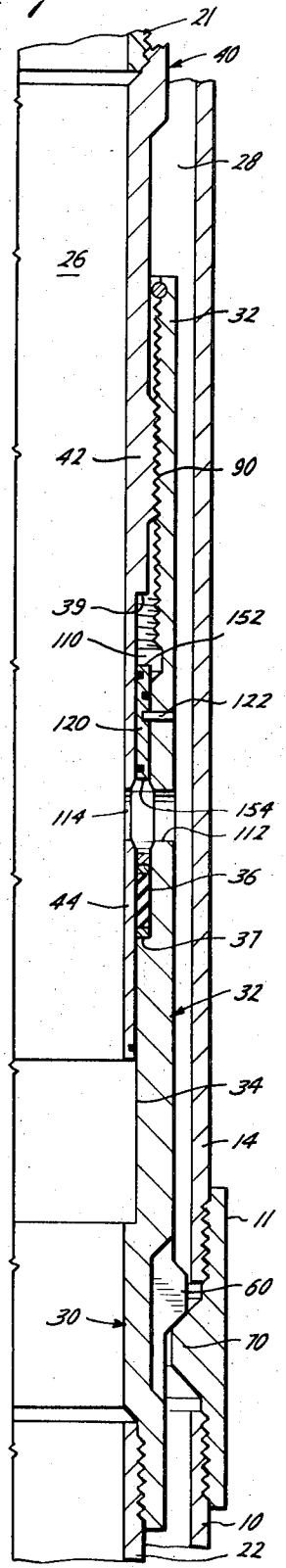

Fig. 5

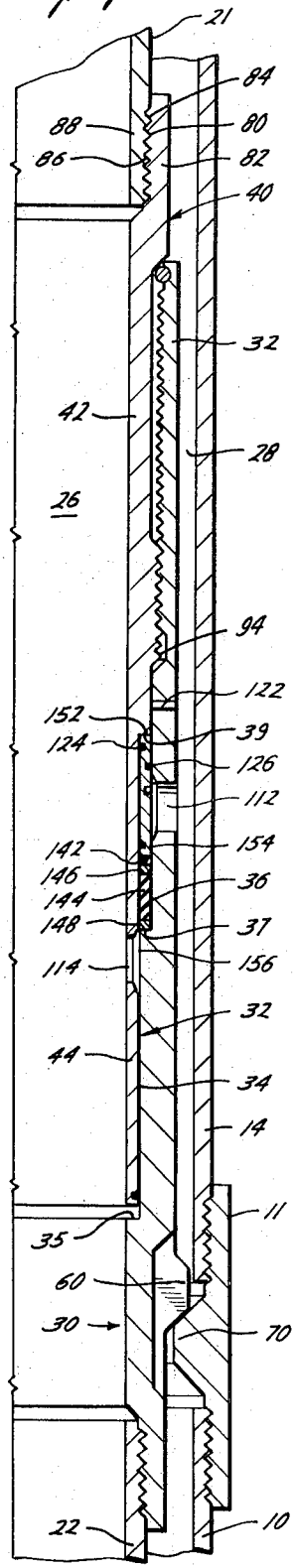

Fig. 6

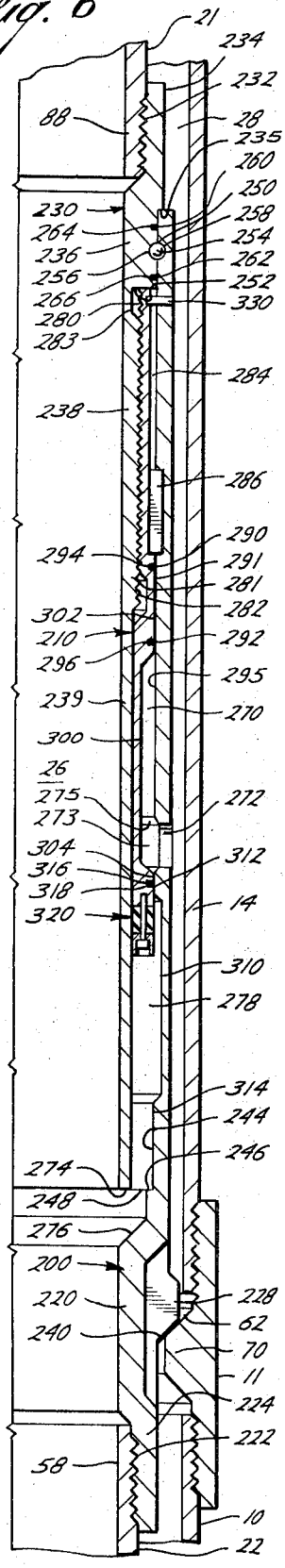

Fig. 7

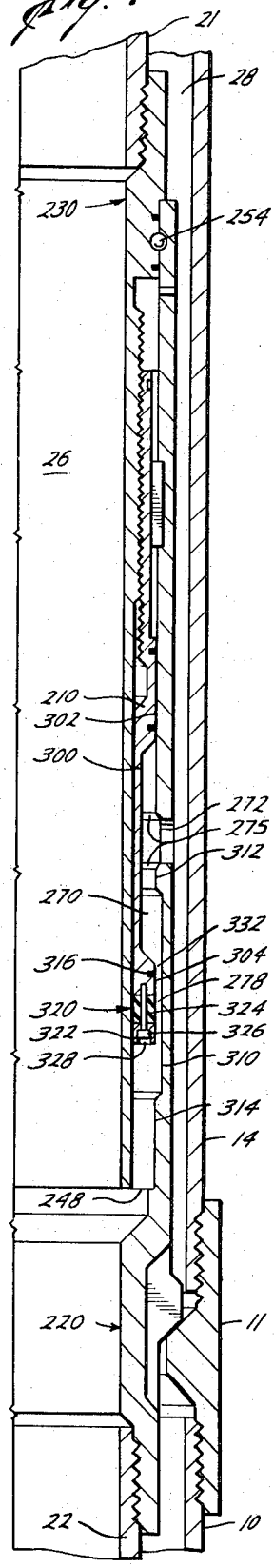

Fig. 8

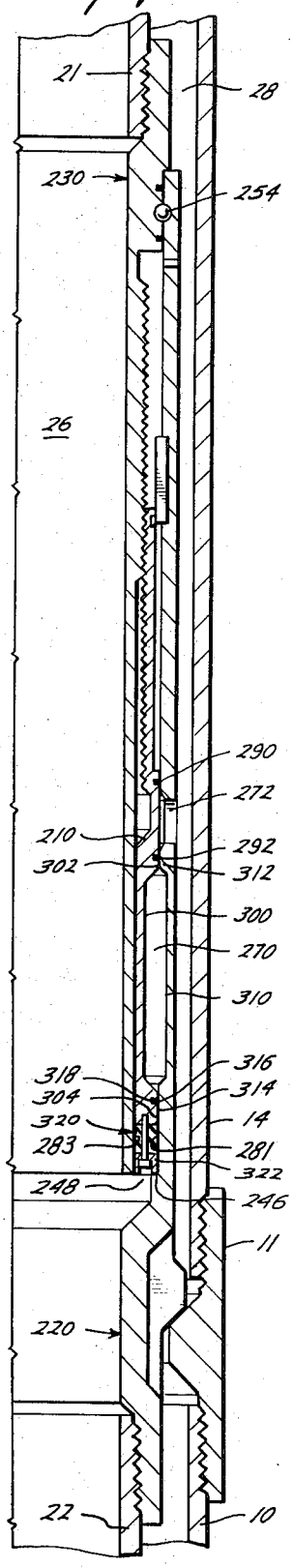

CIRCULATION APPARATUS

BACKGROUND OF INVENTION

1. Field of the Invention

The present invention relates to the drilling of oil or gas wells and more particularly to wash apparatus used to control the passage of washing fluids between the flow bore and annulus around the casing.

2. Description of the Prior Art

Offshore drilling for oil and gas has required the development of new methods and apparatus for extended casing operations underwater. In extended casing operations a conductor casing is jetted, drilled or driven into the ocean floor to provide support for an underwater wellhead. This wellhead supports a multiple number of hanger heads, hangers and their respective casing and tubing strings. Risers are extended from the underwater wellhead to the drilling platform where conventional wellhead equipment is used during the drilling operation.

During the drilling of an underwater well, it is often desired to cement the casing strings within the well to provide support and to isolate production zones. During this operation cement is pumped down through the flow bore of a riser and casing string and up around the lower end of the casing string into an annulus formed between that string and the previously hung casing string in the well. To provide the maximum support possible for the casing string being cemented, it is necessary that the cement extend upwardly around that string as close to the wellhead as possible. Because of the difficulty in determining the level of cement in the annulus, more cement is forced into the annulus than is necessary such that the level of the cement may extend around and above the wellhead. If the cement is permitted to harden around the wellhead and the riser connections it becomes very difficult to remove the risers.

To prevent cement from hardening around the riser area, a method of washing out the undesired cement is used. To perform such an operation a washout joint is connected near the wellhead having circulation ports for passing washing fluids between the flow bore and the annulus. By forcing washing fluids through the circulation ports, the washing fluid washes out the annulus and carries the excess cement surrounding the wellhead to the surface where it is removed.

U.S. Pat. No. 3,508,609 to Fowler et al. describes such a washout joint. The Fowler patent permits the circulation ports of the washout joint to be opened upon a right hand rotation of the riser and also permits those ports to be closed upon a further right hand rotation of the riser. The structures disclosed in U.S. Pat. Nos. 3,405,763 and No. 3,590,922 require the riser to be rotated in a direction opposite the direction of opening the ports to close the circulation ports.

The prior washout joints, however, provide mere interference seals upon the closure of the washout joint to seal off the ports. These seals become ineffective where the sealing surface becomes blemished by nicks and dents and through the deterioration of such seals due to the passage of washing fluids over those seals. Because of the pressure differential between the flow bore and the annulus, such interference seals have proved to be inadequate.

Fowler has provided the industry with a washout joint which is opened and closed upon a rotation of the riser without changing the direction of rotation of the riser. However, the apparatus described in that patent requires such a large outside diameter that the annulus becomes restricted thereby making the apparatus ineffective. Although other washout joints have a usable outside diameter, they fail to provide the single rotation actuation developed by Fowler.

Compression seals have previously been used in cementing apparatus which is used to control the flow of cement through the annulus during the cementing operations. U.S. Pat. Nos. 3,273,646; 3,421,580; 3,460,615; 3,468,559; 3,489,215; 3,489,436; 3,492,026; and 3,638,725 describe the use of a compression seal for the closure of the annulus. However the use of a compression seal in washout joints is visibly absent.

U.S. Pat. Nos. 3,227,218; 3,335,799; 3,460,615; 3,489,436; 3,492,026; and 3,638,725 demonstrate the use of a threaded sleeve movable axially upon actuation by the right hand rotation of the riser. U.S. Pat. No. 3,227,218 shows a splined righthand rotated nut actuating a sleeve valve by a shoulder on the nut engaging th sleeve valve upon an axial movement of the nut in response to the righthand rotation of a handling string. Sleeve valves are shown sealing around portal apertures in U.S. Pat. Nos. 3,086,590; 3,227,218; 3,382,921; 3,468,559; and 3,638,725.

SUMMARY OF THE INVENTION

The invention disclosed herein is a combined washout joint and casing hanger with its lower end suspending a casing string within the well and its upper end connected to a riser extending to the surface. A portion of the joint is provided with circulation ports, which in the running position, are covered by an axially movable sleeve disposed between an inner and outer tubular member composing the apparatus. Circulation ports are opened upon a righthand rotation of the riser. Upon completion of the washout operation the ports are closed upon a righthand rotation of the riser.

In the final closed position the sleeve disposed within the apparatus bears against a compression seal located below the sleeve. As the sleeve moves downwardly, upon actuation by the rotation of the riser, the sleeve compresses the compression seal thereby causing the packing element within the compression seal to sealingly engage between the inner and outer tubular members.

It is an objective of the present invention to provide a combined washout joint and casing hanger with a reduced outer diameter to increase the size of the annulus for the passage of washing fluids. This improved structure further reduces the cost of the apparatus as compared with those devices shown in the prior art.

It is a further object of the present invention to provide a compression sealing means rather than an interference O-ring type seal to insure the establishment of a permanent seal upon completion of the washout operation. One embodiment includes a compression seal which is not subjected to deterioration by the washing fluids passing over its surfaces.

Other objects and advantages of the invention will appear from the following description.

BRIEF DESCRIPTION OF THE DRAWINGS

For a detailed description of the preferred embodiments of the invention, reference will now be made to the accompanying drawings wherein:

FIGS. **1** and **2** are a general cross-section of a typical installation of the invention with FIG. **1** being shown at a reduced scale as compared with FIG. **2**;

FIG. **3** is a cross-section of embodiment I showing the circulation apparatus in the initial closed position;

FIG. **4** is a cross-section of embodiment I showing the circulation apparatus in the open position;

FIG. **5** is a cross-section of embodiment I showing the circulation apparatus in the final closed position;

FIG. **6** is a cross-section of embodiment II showing the circulation apparatus in the initial closed position;

FIG. **7** is a cross-section of embodiment II showing the circulation apparatus in the open position.

FIG. **8** is a cross-section of embodiment II showing the circulation apparatus in the final closed position.

DESCRIPTION OF THE PREFERRED EMBODIMENT

The present invention is a combination washout joint and casing hanger which can be installed in an oil or gas well on a single trip into the well. The apparatus is in the form of a joint or coupling which provides means for suspending a string of casing and means for washing out the annulus around the riser casing extending to the surface after the cementing operation is completed.

FIGS. **1** and **2** illustrate a typical environment in which the present invention may be used. A conductor casing **10** is shown jetted, drilled, or driven into the ocean floor **12** with a conductor riser or casing extension **14** extending from casing head **11**, which connects riser **14** and casing **10** at the ocean floor **12**, to a drilling means or platform such as a ship or barge **16.** Conductor casing **10** is shown secured to the ocean floor **12** by cement **18.** A general view of embodiment I is shown in FIG. **2** with circulation coupling **20** illustrated in the open position. The upper riser portion **40** of coupling **20** is attached to riser or casing extension **21** which extends to the drilling surface **16,** and the lower larger portion **30** of coupling **20** is shown suspending a string of casing **22** into the well. Although the means for suspending casing string **22** is shown as an integral part of coupling **20,** it may be separate from and connected to coupling **20.** FIG. **2** shows the completed cementing of the casing **22** at **24,** and the circulation passages **25** open for the washout operation. The casing **22** is plugged with cement at **23.** A fluid may now pass down the central or flow bore **26** of casing **22** until the fluid passes through passages **25** into the annulus **28,** formed by the previously installed casing **14** and the riser casing **21.** The fluid then flows up to the drilling surface **16** where the returns are removed from the well. The preferred embodiments will be described under the supposition that all connections are right hand threaded such that right hand rotation causes them to engage rather than disengage. However, it should be understood that if left hand threaded connections were to be used, the circulation coupling **20** would be actuated upon a left hand rotation of the riser **21.**

EMBODIMENT I

Referring now to FIGS. **3–5** for a detailed illustration of embodiment I, the circulation coupling **20** is shown to have two major portions, a lower cylindrical casing hanger portion **30** and an upper cylindrical riser portion **40.**

The lower cylindrical casing hanger portion **30** in FIG. **3** has a righthand threaded connection **50** at its lower extremity **52** for attachment and suspension of casing string **22.** The attachment of extremity **52** and casing string **22** may be of varying types. In the preferred embodiment, however, extremity **52** has a box with interior righthand threads **54** for engagement with exterior righthand threads **56** on the periphery of pin **58** on the upper end of casing string **22.** Extremity **52** causes casing string **22** and hanger portion **30** to have substantially the same inner flow diameter.

A plurality of radially extending azimuthally spaced ribs **60** forming flutes **61** therebetween are provided on the peripheral external surface of hanger portion **30** for engagement with the internal restrictive shoulder **70** of casing head **11.** Ribs **60** may have a leading beveled edge **62** mating with an upper beveled edge **72** disposed on shoulder **70.** Shoulder **70** provides the support for the suspension of casing **22** until casing **22** becomes cemented in the well as shown at **23** and **24** in FIG. **2.** Other methods of supporting hanger portion **30** may be utilized, such as an expansion landing ring received in landing grooves.

Flutes **61** are provided for the passage of well fluids and cement through annulus **28** between the conductor casing and riser **10, 14** and casing and riser **21, 22.**

Box **32** forms the upper extremity of hanger portion **30,** and includes a major counterbore section **34** and a minor counterbore section **36.** Major counterbore section **34** enlarges the inner flow bore of hanger portion **30** and forms with the internal surface **33** an annular shoulder **35** facing upwardly in the well. Minor counterbore section **36** is a counterbore within major counterbore section **34** and has a greater inner diameter. Minor counterbore section **36** also forms with major counterbore section **34** an annular shoulder **37** facing upwardly.

Best shown in FIG. **5,** the upper cylindrical riser portion **40** has a righthand threaded connection **80** at its upper extremity **82** for attachment to riser **21.** Extremity **82** has a box with interior right hand threads **84** for engagement with exterior righthand threads **86** on the periphery of pin **88** on the lower end of riser **21.** Extremity **82** permits riser **21** and riser portion **40** to have substantially the same inner flow diameter. Of course these connections may be of varying types.

Referring again to FIG. **3,** a pin portion **42** comprises an intermediate portion of the riser portion **40,** which has a reduced diameter section or nipple **44** as its lower end. Nipple **44** decreases the diameter of the peripheral surface of the pin portion **42** and creates with external surface **96,** and external annular shoulder **39** facing downwardly into the well and opposite shoulder **37.**

Box **32** is threadedly engaged with pin **42** to form threaded connection **90.** The minor counterbore section **36** of box **32** has interior righthand threads **92** which threadingly engage corresponding exterior righthand threads **94** of pin **42.** The inside diameter of threads **92** and the outside diameter of threads **94** are slightly larger than the diameter of the inner peripheral

surface 98 of minor counterbore section 36 and the diameter of outer peripheral surface 98 of pin 92. Threads 94 are located above nipple 44. Upon the righthand rotation of riser 21, pin 42 moves downwardly into box 32 to the right hand threaded connection 90. Securement means such as a snap ring 132 is disposed in internal annular groove 134 in the tip of minor counterbore section 36 to prevent accidental disassembly of riser portion 40 and hanger porton 30.

The diameter of surface 96 of pin 42 is slightly smaller than the diameter of surface 98 of minor counterbore section 36, so that it may be slidably received therein. Likewise, the diameter of surface 100 of nipple 44 is only slightly less than the diameter of major counterbore section 34. This structure causes annular shoulders 37 and 39 to face each other as previously indicated, creating an annular chamber 110 between them and the adjoining surfaces 98 and 100, and causing annular shoulder 35 to face the lower end 104 of nipple 44.

An annular cylindrical packing gland 120 is disposed within chamber 110. Packing gland 120 has an inner diameter slightly greater than the outer diameter of nipple 44, and an outer diameter slightly less then the inner diameter of counterbore section 36. Packing gland 120 is prevented from axial movement initially by shear pin 122 which passes through counterbore section 36 and into packing gland 120.

O-ring seals 124 are provided in annular grooves 125 disposed in the internal surface of packing gland 120 for sealingly engaging the smooth external surface 100 of nipple 44. O-ring seal 126 is disposed in annular groove 127 in the external peripheral surface of gland 120 for sealing engagement with the smooth internal surface 98 of minor counterbore section 36. In the initial closed position as shown in FIG. 3 ports 114 are positioned adjacent to gland 120 such that seals 124 seal completely around and enclose all ports 114. Seals 124, 126 together prevent communication between ports 112 and annulus 28 and further prevent any fluids from ports 112, 114 from reaching the upper portion of chamber 110 above gland 120 to threads 92. O-ring seal 128 is disposed in annular groove 129 provided near the tip 104 of nipple 44 to sealingly engage the smooth internal surface 102 of major counterbore section 34 thereby preventing any fluids from passing through ports 112 and into central flow bore 26 and vice versa. The O-ring seals provide temporary seals during the running-in and washing-out operations, but are not relied upon for permanent sealing.

A compression seal 140 is spaced below gland 120 in chamber 110. Compression seal 140 has a means for reducing friction such as a soft metal bearing ring 142 or ball bearings and an annular packing element 144 between two retainer rings 146, 148 to prevent any rotational motion of upper riser portion 40 from being transmitted by friction to compression seal 140, by means of packing gland 120. Compression seal 140 is activated for final sealing of chamber 110 in the final closed position of circulation coupling 20 which is discussed hereinafter.

Passage 25 comprises a plurality of ports 112 azimuthally spaced around and through minor counterbore section 36 and a plurality of ports 114 azimuthally spaced around and through nipple 44. Ports 112 are positioned opposite the space between the gland 120 and the seal 140, and ports 114 are initially positioned between the upper and lower O-rings 124 in the gland 120. Annular beveled edge grooves 112*a* and 114*a* prevent the shearing of seals 124, 126 as they pass ports 112, 114 as hereinafter discussed.

The circulation coupling 20 may be installed in any casing string suspended in the well after the conductor casing and riser are in place. Coupling 20 is attached to the last casing section in the casing string to be suspended, such as casing 22, by a righthand rotation of coupling 20. Riser portion 40 has already been inserted into, and connected by right-hand rotation to, hanger portion 30. Snap ring 132 has been disposed in internal annular groove 134 in the tip of minor counterbore section 36 to prevent the disassembly of riser portion 40 from hanger portion 30. A section of riser casing 21 is attached at connection 80 by righthand rotation, and successive sections are added as the casing string is lowered until ribs 60 of coupling 20 engage and rest on shoulder 70 of casing head 11.

Referring again to FIG. 3, coupling 20 is shown in the initial closed position and landed on casing head 11. At this point cement indicated at 23 and 24 in FIG. 2 is passed down through flow bore 26, around the lower end of casing 22 and into annulus 28. Drilling mud or other liquid is pumped in behind the cement until the cement reaches at least the level in annulus 28 shown in FIG. 2. It is impossible to determine the extent of the top of the cement in the annulus, and cement may rise substantially higher in the annulus, to above the coupling 20. If the cement is allowed to set up at this level, it may be impossible to separate the coupling to remove risers. Thus it is desirable to wash out all cement above the box 32 before the cement sets up. Passage 25 is used for this purpose.

To open passage 25 for the washout operation as shown in FIG. 4, riser 21 is rotated to the right causing pin 42 to move axially downwardly within box 32 until ports 112 and 114 are in alignment. Nipple 44 has a sufficient length to avoid the engagement of shoulder 39 against gland 120 as chamber 110 becomes contracted. Water or other such liquid is then passed down flow 26 as shown in FIG. 2 and through passage 25 into annular 28. The fluid then passes up annulus 28 to the drilling platform 16, washing-out the cement around the coupling.

To close passage 25 as shown in FIG. 5, riser 21 is further rotated to the right until shoulder 39 engages the upper end 152 of gland 120. Further rotation shears pin 122, due to the force of pin 42, and gland 120 is moved axially downward until the lower end 154 of the gland engages bearings 142. Upon such engagement, ports 112 have been moved below the compression seal, and gland 120 has been disposed adjacent ports 112.

Further rotation compresses compression seal 140 thereby sealing passage 25 from any fluid flow. Bearing ring 142 reduces the friction between gland 120 and upper retainer ring 146, thereby reducing the likelihood of compression seal 140 to rotate and be damaged during compression. Such a compression seal is more dependable than an interference seal which requires a sealing engagement with a smooth surface. Compression seal 140 will make a good seal since packing 144 will be forced into any imperfections in the inner surface 98 of minor counterbore section 34 or outer surface 100 of nipple 44.

EMBODIMENT II

Referring now to FIGS. 6–8 illustrating embodiment II, the circulation coupling 200 also has a lower cylindrical casing hanger portion 220 and an upper cylindrical riser portion 230.

As in embodiment I the lower cylindrical casing hanger portion 220 has a righthand threaded connection 222 at its lower extremity 224, which comprises a box for connection with pin 58 on the upper end of casing string 22, whereby casing string 22 and hanger portion 220 have substantially the same inner flow diameter.

A plurality of radially extending ribs 228 engage restrictive shoulder 70 on casing head 11, through a lower beveled edge 240 mating with upper edge 62 of shoulder 70. Shoulder 70 supports the suspension of casing 22 by coupling 200 until casing 22 is cemented into place.

Hanger portion 220 is provided with a counterbore 244 extending from near the ribs 228 to the upper end of the hanger portion, the counter terminating at its lower end in a small shoulder 246 and a bevel 276.

The upper cylindrical riser portion 230, as in embodiment I, has a righthand threaded connection 232 at its upper extremity 234 for attachment to riser 21. Extremity 234 is a box for receiving pin 88 of riser casing 21 thereby permitting riser 21 and riser portion 230 to have substantially the same inner flow diameter.

Below the box 234 the coupling riser portion 230 is reduced in diameter at 235 and telescopically received within the counterbore 244 of the hanger portion 220, the two portions of the coupling being rotatably connected together at 250 and prevented from longitudinal movement relative to each other by means of ball bearings 254 received in cooperating ball races 256, 258 in the riser portion 230 and the counterbore 244, respectively. Interference O-ring seals 260, 262 are disposed in annular grooves 264, 266 respectively located above and below balls 254 and races 256, 258 to prevent foreign material and fluids from damaging connection 250.

Coupling riser portion 230 has an upper portion 236 and a lower reduced diameter portion 238. The reduced diameter portion 238 forms a shoulder 252 with portion 236, and is provided with straight righthand male threads 282, as for example Acme threads, on a portion 282 thereof extending from a threading tool runout groove 283 adjacent the shoulder 252 to the beginning of a further reduced diameter nipple portion 239 which forms the lower end of the riser portion 230 of the coupling. The nipple portion 239 is substantially smaller in outside diameter than the counterbore 244, and terminates at its lower end 274 substantially at the level of the shoulder 246, leaving an annular passageway 278 therebetween which opens into the bore of the coupling at an annular aperture 248.

A sleeve valve 210, comprising a generally tubular sleeve, is provided with female threads 280 at its upper end threadedly engaging the threads 282 on the portion 238, the sleeve valve being received in the annular space 270 between the riser portion 230 and the hanger portion 220. In the running-in condition, as shown in FIG. 6, the sleeve valve is pinned to the hanger portion 220 by means of a shear pin 330. The upper outer peripheral surface 291 of sleeve valve 210 has splines 284 cooperating with and engaging a spline guide 286 affixed on the upper peripheral surface 295 of counterbore section 244. The above described structure permits axial movement downward of sleeve valve 210 upon the righthand rotation of riser portion 230 due to the righthand rotation of riser 21. Spline guide 286 prevents any rotary motion of sleeve valve 210 while permitting axial movement. The righthand rotation of threads 282 drive thread 280 and thus sleeve valve 210 downwardly. Initially, however, sleeve valve 210 is inhibited from axial movement by shear pin 330.

Sleeve valve 210 has an external reduced diameter section or annular groove 300 in its lower extremity creating raised lands 302, 304 above and below groove 300. FIG. 8 shows a corresponding internal reduced diameter section or annular groove 310 in the lower portion of counterbore section 244 which is substantially the same length as groove 300 and which creates lands 312, 314 above and below groove 310. In the running-in condition shown in FIG. 6, the lower end of groove 300 is opposite a plurality of azimuthally spaced ports 272 in the wall of the hanger portion 220. An internal groove 273 having upper and lower bevels 275 incompasses these ports. Lands 312, 314 are disposed adjacent lands 302, 304, respectively, in the final closed position as illustrated in FIG. 8.

Seals 290, 292 are disposed in grooves 294, 296, respectively, in land 302. As shown in FIG. 8 seals 290 and 292 are sufficiently spaced apart to sealingly enclose ports 272 by annular seal 290 being disposed above and annular seal 292 below ports 272. An O-ring seal 316 is disposed in annular groove 318 which is located in land 304. In the final closed position, seals 292 and 316 seal above and below, respectively, the chamber 270 created by grooves 300 and 310; although a compression seal 320, hereinafter discussed, will be the primary seal for closing annular passageway 278.

It must be noted that, as shown in FIG. 6, land 304 mates with land 312 in the initial closed position to prevent the flow of foreign material from ports 272 into chamber 270, or from flow bore 26 into annulus 28.

For a final seal an annular compression seal 320 shown in FIG. 7 is affixed to the lower end of sleeve valve 210. Seal 320 has a retainer ring 322 supporting an annular packing element 324 by means of bolts 326 passing from below through retainer ring 322 and packing element 324 and threaded into the lower end of sleeve valve 210. The heads of bolts 326 have been countersunk into retainer ring 322 to permit the compression of packing element 324 without the bolts 326 wedging against the abutting surface shoulder 246. As shown in FIG. 8 the sleeve valve 210 forces retainer ring 322 against shoulder 246 which thereby compresses packing element 324 into sealing engagement with the outer peripheral surface 283 of nipple 238 and with the inner peripheral surface 281 of counterbase section 244. The countersunk bolts 326 cannot contact shoulder section 246 because of the countersink holes 328.

The circulation coupling 200 is installed under the same procedure described in the installation of coupling 20 in embodiment I. Coupling 200 is run in on riser 21 until lands 228 engage shoulder 70. The casing 22 is then cemented.

Referring again to FIG. 6, coupling 200 is shown in the initial closed position. No cement is permitted to pass between flow bore 26 and annulus 28. Lands 304

and **312,** as previously disclosed, are adjacent in the initial closed position of coupling **220** with O-ring seal **316** sealingly engaging the smooth surface of land **312** to close passage **278** by preventing flow through passageway **278** into ports **272.**

To open a flow passage **278** between annulus **28** and flow bore **26,** riser **21** is rotated to the right causing pin **238** to also rotate to the right thereby forcing sleeve valve **210** downward and shearing pin **330.** As sleeve valve **210** moves downward, land **304** moves off of land **312** until land **304** no longer engages any portion of counterbore section **244** and is merely projecting into annular groove **310** causing a flow passage **332** to be formed around **304** and seal **316.** Well fluids are then passed down flow bore **26** and through aperture **248** into chamber **270** around land **304** and into annulus **26** via plurality of ports **272.** The fluid passes up annulus **28** to the drilling platform **16.**

To close, as shown in FIG. **8,** upon the completion of the washout process, riser **21** is further rotated to the right until lands **302, 304** mate and seal with lands **312, 314,** respectively. This seals the flow passage **278.** However, since O-ring seals **292, 316** are merely interference seals, no seal will be established if the surface **281** of lands **312, 314** opposite seals **292, 316** has been damaged due to a blemish such as a dent or scratch in the surface. Therefore, compression seal **320** has been used which will establish a seal regardless of the smoothness of the surfaces **281, 283** since packing element **324** will flow into and seal around any such blemishes.

While a preferred embodiment of the invention has been shown and described, modifications thereof can be made by one skilled in the art without departing from the spirit of the invention.

I claim:

1. An apparatus mounted in fluid flow relationship with a casing extension and a casing string for the passage of fluids between the annulus and the flow bore and for the suspension of the casing string within a well comprising

a lower tubular member adapted for suspending the casing string within the well,

an upper tubular member rotatably mounted within said lower member and adapted for connection to the casing extension, said upper and lower members having registerable fluid passageways,

means actuated by the rotation of the casing extension in one direction for axially moving said upper member whereby said passageways are first registered for fluid passage and then unregistered blocking fluid flow,

an annular chamber formed between the upper and lower members so as to be constricted upon axial movement of said upper member in said one direction, and

a compression seal in said annular chamber positioned to be compressed upon the axial movement of said upper member to the unregistered position to seal off said passageways.

2. An apparatus as defined in claim **1** wherein said compression seal includes a packing element disposed between an upper and a lower retainer ring.

3. An apparatus as defined in claim **2** wherein a first annular shoulder is disposed on the outer periphery of said upper member forming one end of said annular chamber and a second annular shoulder is disposed on the inner periphery of said lower member forming the other end of said annular chamber whereby upon the axial movement of said upper member said compression seal is compressed between said first and second annular shoulders; and means for reducing friction between said upper retaining ring and said first annular shoulder.

4. An apparatus as defined in claim **3** further including a packing gland disposed within said annular chamber; and means on said gland positioned for sealing around said passageways in said upper member prior to the axial movement of said upper member and for sealing around said passageways in said lower member after said upper member has moved axially to unregister said passageways.

5. An apparatus mounted in fluid flow relationship with an upper portion and a lower portion of a casing string for the passage of fluid between the annulus surrounding such casing string and the flow bore of such casing string comprising

an inner sleeve affixed to such upper portion,

an outer sleeve affixed to such lower portion,

said inner sleeve being telescopingly mounted within said outer sleeve,

said inner and outer sleeves having registrable fluid passageways,

means for axially moving said inner sleeve in a single axial direction,

said inner sleeve being movable to a first position where said passageways do not register thereby preventing fluid flow between the annulus and flow bore, to a second position where said passageways do register permitting such fluid flow, and to a third position where said passageways again do not register, all said positions being achieved by the axial movement of said inner sleeve in a single direction in relation to said outer sleeve,

sealing means comprising a sleeve valve between said inner and outer sleeves adapted to provide a seal between said inner and outer sleeves when said inner sleeve is in any of said first, second and third positions, and

a packing element compressed between two retainer rings when said inner sleeve is in said third position.

6. An apparatus as defined in claim **5** wherein said sleeve valve is releasably mounted on one of said sleeves and is located on one side of said passageways.

7. An apparatus as defined in claim **6** wherein said single axial direction is downwardly; said registrable fluid passageways include at least one outer port in said outer sleeve and at least one inner port in said inner sleeve; and said sleeve valve is releasably mounted above said outer port while said inner sleeve is in said first position.

8. An apparatus as defined in claim **7** wherein the downward movement of said inner sleeve from said second position to said third position releases said sleeve valve causing said sleeve valve to also move downwardly thereby sealingly engaging said outer sleeve around said outer port.

9. An apparatus as defined in claim **8** wherein said sleeve valve compresses said packing element in said third position.

10. An apparatus as defined in claim **9** further including means for reducing friction between said sleeve

valve and one of said retainer rings as said packing element becomes compressed.

11. An apparatus as defined in claim **10** wherein said moving means includes a connection between said inner and outer sleeve whereby upon rotation of said upper portion said inner sleeve moves downwardly in relation to said outer sleeve.

12. An apparatus mounted in fluid flow relationship with a casing string for the passage of fluid between the outer annulus surrounding such casing string and the flow bore of such casing string comprising

a body portion mounted in fluid flow relationship with such casing string, said body portion having a fluid passageway between such flow bore and such outer annulus,

a sleeve valve movably mounted on said body portion having a first position where said passageway is closed, a second position where said passageway is open, and a third position where said passageway is closed,

means for moving said sleeve valve to open and close said passageway, said moving means being actuated by the rotation of such casing string in a single direction to cause said valve sleeve to move axially in a single direction with respect to said body portion, and

compression seal means including a packing element between an upper and a lower retainer disposed on said sleeve valve for compression against an annular shoulder disposed on said body portion upon the movement of said sleeve valve to close said passageway, whereby said compression seal means seals off said passageway from the flow of fluids.

13. An apparatus as defined by claim **12** further including means for sealing between said body portion and said valve sleeve while said sleeve valve is in said first and third positions.

14. An apparatus as defined by claim **13** wherein said sealing means includes seals mounted on said sleeve valve which sealingly engage said body portion in said first and third positions.

15. An apparatus as defined by claim **14** wherein said body portion includes a sleeve; said sleeve valve reciprocably movable within said sleeve; said passageway including at least one port through said sleeve.

16. An apparatus as defined by claim **15** wherein said sleeve has a longitudinal groove in its internal surface located below said port whereby in said second position said sealing means and said compression seal means are prevented from sealingly engaging said internal surface of said body portion thereby permitting fluid passage through said passageway.

17. An apparatus as defined by claim **16** wherein said body portion further includes a nipple rotatably connected to said sleeve; said nipple being threadingly connected to said sleeve valve and splined to said sleeve whereby upon rotation of said casing said sleeve valve is prevented from rotating with said nipple thereby causing said sleeve valve to move downwardly within said sleeve.

18. An apparatus mounted in fluid flow relationship with an upper and a lower casing string for the passage of fluid between the annulus surrounding such casing strings and the flow bore of such casing strings comprising:

a sleeve mounted on such upper casing string and on such lower casing string; said sleeve having a passageway therethrough for the flow of fluids between such flow bore and such annulus;

sealing means mounted on said sleeve; said sealing means including an upper retainer, a packing element, and a lower retainer; said packing element being disposed between said upper and lower retainers;

means reciprocatably mounted on said sleeve actuated by the rotation of such upper casing; and

means for biasing said sealing means against said reciprocating means as said reciprocating means moves towards said biasing means whereby said sealing means sealingly closes said passageway by compressing said packing element between said upper and lower retainers.

19. Apparatus for the passage of fluid between the flow bore of a tubular well string and the surrounding environment comprising

telescoped upper and lower tubular members in said well string rotatably connected togther,

an annular space between said upper and lower tubular members,

a fluid passageway between the bore of the inner of said tubular members and said annular space,

a fluid passageway between the annular space and the environment surrounding the outer of said tubular members, and

a valve member in said annular space movable, upon relative rotation of said tubular members in a single direction, from a first position blocking communication between said fluid passageways, to a second position not blocking communication between said fluid passageways, and then to a third position blocking communication between said fluid passageways.

20. Apparatus as defined by claim **19** wherein the upper and lower tubular members are threadedly connected together, and said valve member comprises a sleeve valve having seal means thereon sealingly engageable with both of said upper and lower tubular members in both said first position and said third position, said sleeve valve being positionable for engagement by a shoulder on one of said tubular members upon relative rotation of said tubular members in said direction.

21. Apparatus as defined by claim **19,** wherein

said valve member comprises a sleeve valve having seal means thereon sealingly engageable with both of said upper and lower tubular members in both said first position and said third position.

22. Apparatus as defined by claim **19** wherein the upper and lower tubular members are restrained against relative longitudinal movement, and said valve member comprises a sleeve valve threadedly engaged with one of said tubular members, connection means between said valve member and the other tubular member allowing relative axial movement but preventing relative rotational movement, and seal means sealingly engageable with both of said tubular members in both said first position and said third position.

* * * * *

PO-1050
(5/69)

UNITED STATES PATENT OFFICE
CERTIFICATE OF CORRECTION

Patent No. 3,820,599 Dated June 26, 1974

Inventor(s) John Walton McCaskill, III

It is certified that error appears in the above-identified patent and that said Letters Patent are hereby corrected as shown below:

Column 11, line 44: Delete "rocably" and insert

--rocatably--.

Signed and sealed this 29th day of October 1974.

(SEAL)
Attest:

McCOY M. GIBSON JR.
Attesting Officer

C. MARSHALL DANN
Commissioner of Patents