Aug. 4, 1936. J. E. BLOSSER ET AL 2,049,759

METHOD AND APPARATUS FOR PACKAGING ROLLS

Filed May 8, 1935 4 Sheets-Sheet 1

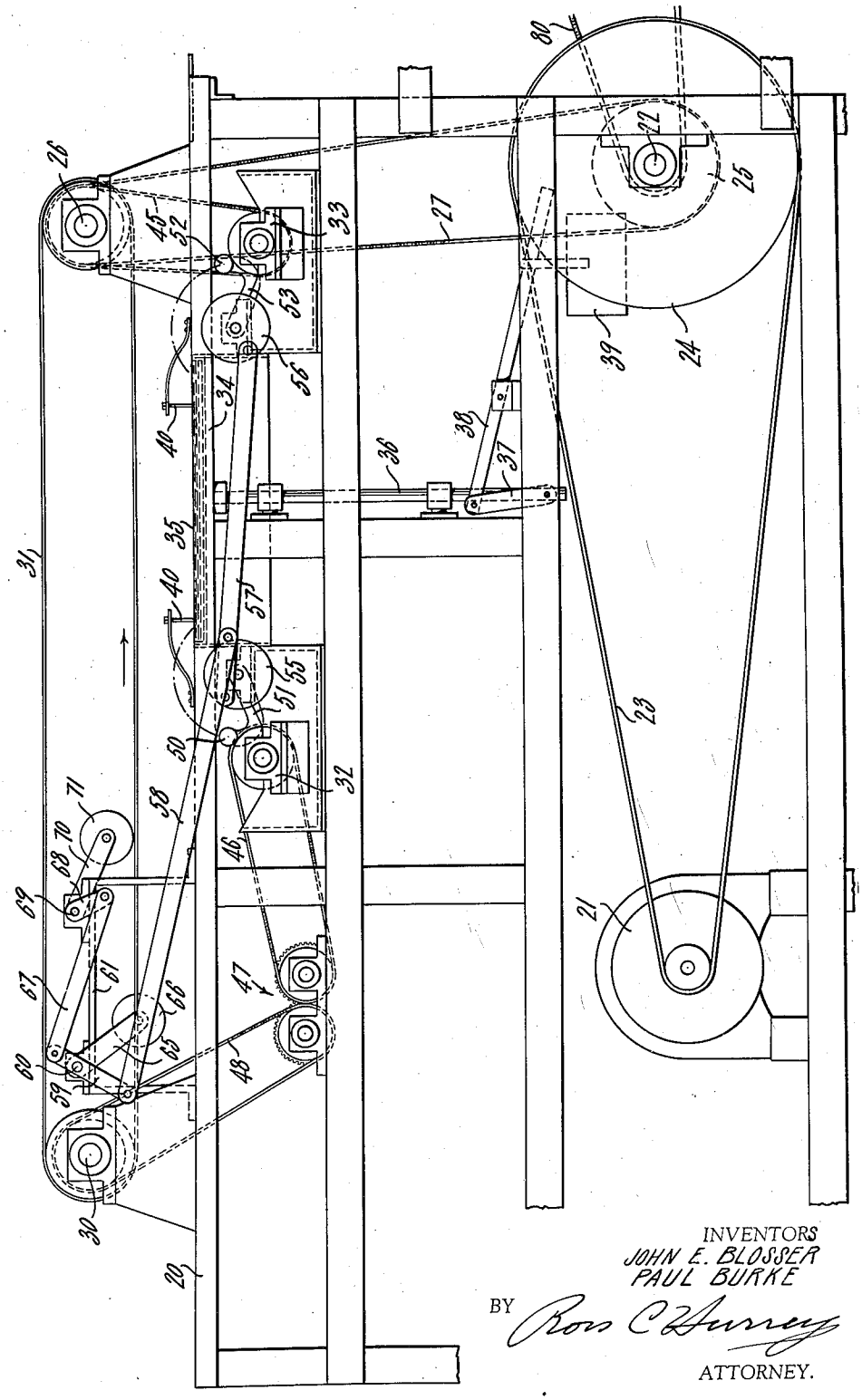

Fig. 1.

INVENTORS
JOHN E. BLOSSER
PAUL BURKE

BY Ross C Hurney

ATTORNEY.

Aug. 4, 1936. J. E. BLOSSER ET AL 2,049,759

METHOD AND APPARATUS FOR PACKAGING ROLLS

Filed May 8, 1935 4 Sheets-Sheet 2

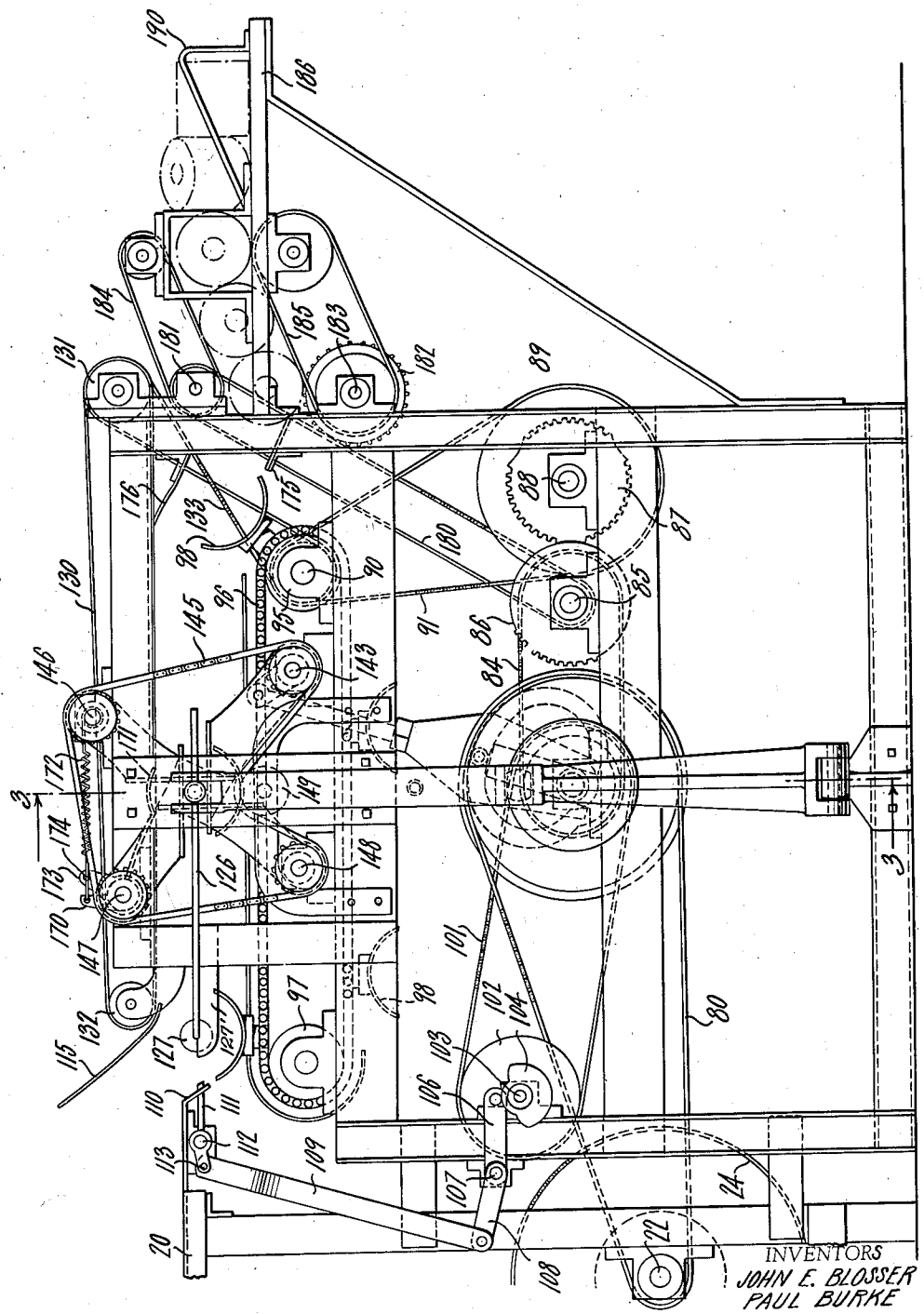

Fig. 2.

INVENTORS
JOHN E. BLOSSER
PAUL BURKE

BY Ross C. Hurney
ATTORNEY.

METHOD AND APPARATUS FOR PACKAGING ROLLS

Filed May 8, 1935 4 Sheets-Sheet 3

Fig. 3.

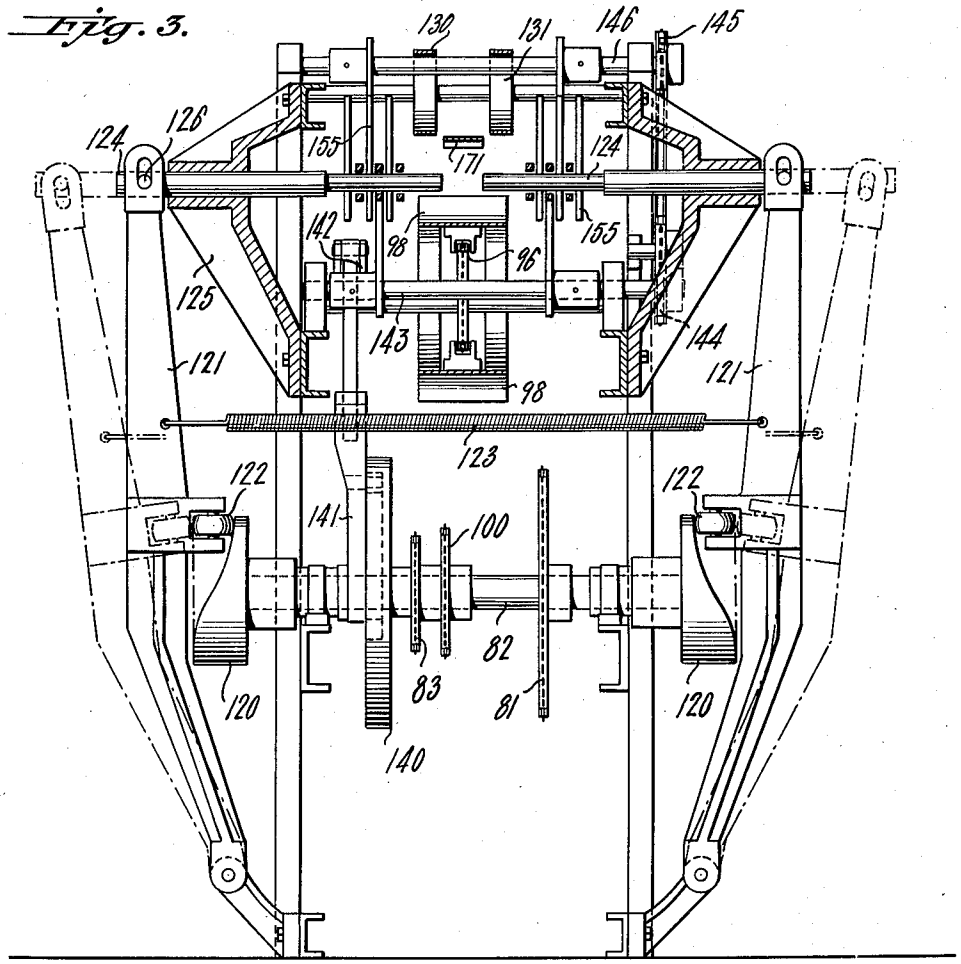

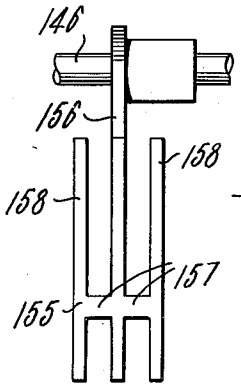

Fig. 4.

INVENTORS
JOHN E. BLOSSER
PAUL BURKE
BY Ross C. Hurney
ATTORNEY.

Aug. 4, 1936. J. E. BLOSSER ET AL 2,049,759

METHOD AND APPARATUS FOR PACKAGING ROLLS

Filed May 8, 1935 4 Sheets-Sheet 4

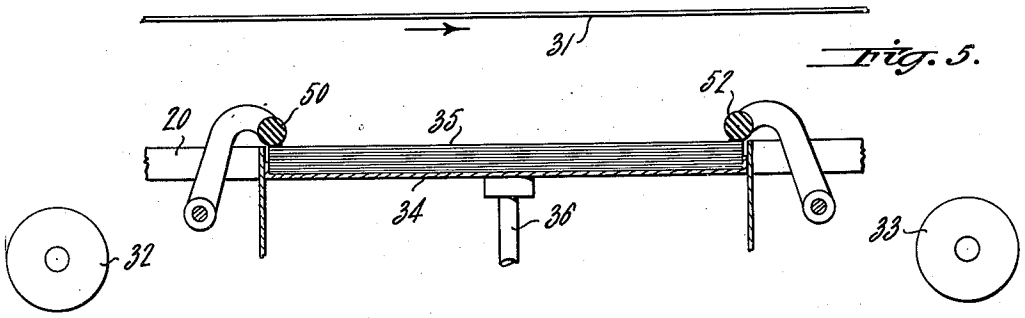

Fig. 5.

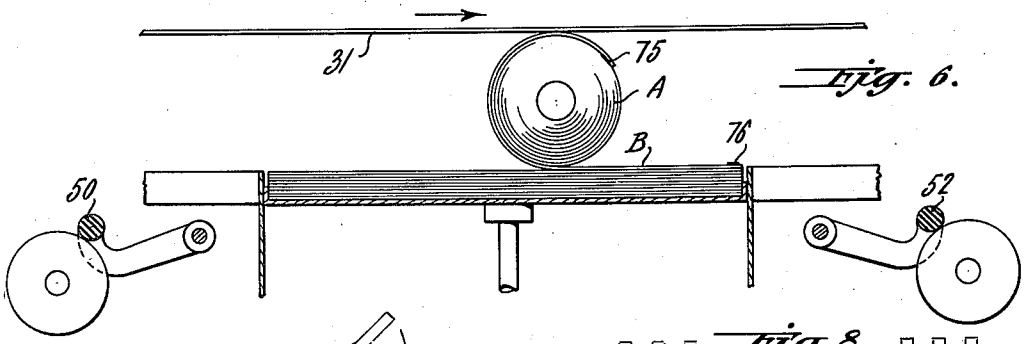

Fig. 6.

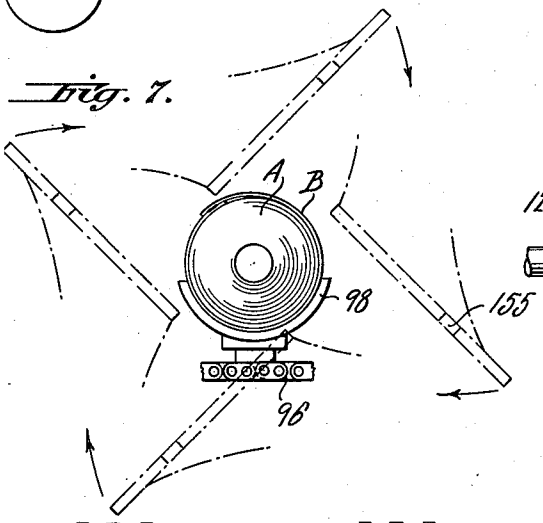

Fig. 7.

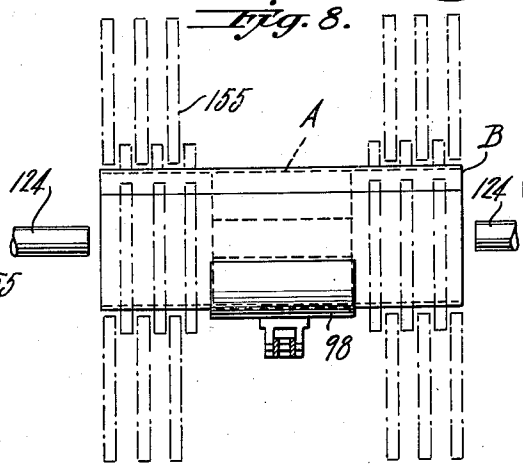

Fig. 8.

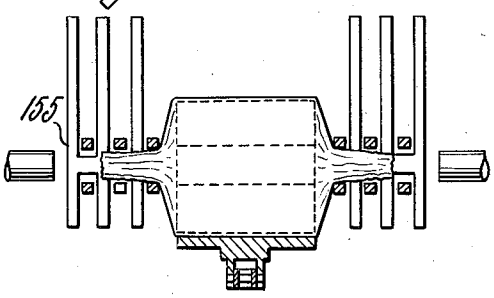

Fig. 9.

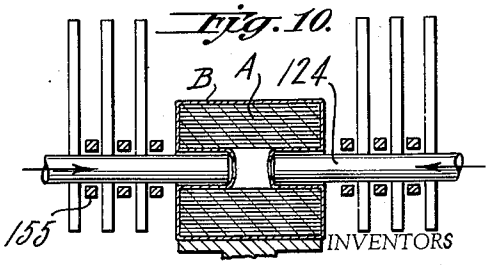

Fig. 10.

INVENTORS
JOHN E. BLOSSER
PAUL BURKE

BY Ross C. Hurney
ATTORNEY.

Patented Aug. 4, 1936 2,049,759

UNITED STATES PATENT OFFICE

2,049,759

METHOD AND APPARATUS FOR PACKAGING ROLLS

John Edward Blosser, Glens Falls, and Paul Burke, South Glens Falls, N. Y., assignors to Veldown Company, Inc., a corporation of New York

Application May 8, 1935, Serial No. 20,328

4 Claims. (Cl. 93—5)

The present invention relates to an improvement in a machine and method for the automatic packaging of rolls of tissue paper. The object of the invention is to devise means whereby rolls of tissue paper can be wrapped in an outer covering of paper or similar material at a very high rate of speed, and without there being any possibility of manual handling of the rolls. A further object of the invention is to devise means for providing a uniform, neat and attractive covering for rolls of tissue paper or other rolls or objects comprising a cylindrical body having an opening centrally thereof.

Another object of the invention is to devise a method and means of applying a label to a cylindrical object.

Further objects and advantages of the present invention will be realized from an inspection of the accompanying drawings which, taken in connection with the following description, set forth the preferred embodiment of the invention.

Referring to the drawings:

Fig. 1 is a side elevation of the wrapper applying mechanism comprising a portion of the invention;

Fig. 2 is a side elevation of the wrapper shaping mechanism comprising a portion of the invention, the mechanism of this figure adjoining the right end of the mechanism illustrated in Fig. 1;

Fig. 3 is a cross-section in elevation of the mechanism of Fig. 2 taken along line 3—3 of Fig. 2;

Fig. 4 is a detail view on an enlarged scale of one of the wrapper folding elements;

Fig. 5 is an enlarged cross-sectional view taken longitudinally of the mechanism of Fig. 1, and partially in schematic representation illustrating the wrapper gumming mechanism in operation;

Fig. 6 is a view similar to Fig. 5 and showing the gumming mechanism retracted and a roll being wrapped in the previously gummed wrapper;

Fig. 7 is a schematic view in side elevation of the wrapper forming elements in partially open position;

Fig. 8 is an end elevation of Fig. 7;

Fig. 9 is a view similar to Fig. 7 showing the wrapper folding elements in their substantially final position; and

Fig. 10 is a similar view showing the wrapper forming elements in their final position.

Referring to Fig. 1, there is represented a frame comprising a table 20 to which rolls of paper are fed by means of conveying mechanism (of any suitable type, not shown) as said rolls are ejected from roll forming mechanism, such as described in the copending application of John Edward Blosser and Paul Burke, Serial No. 750,784, filed October 31, 1934.

Positioned beneath the table is a motor 21 or other suitable source of power driving a main shaft 22 by means of a belt 23 and pulley 24. A sprocket 25 fixed to shaft 22 drives a shaft 26 located above the table by means of a chain 27 and a suitable sprocket fixed to shaft 26. At the receiving end of table 20 there is located a shaft 30 parallel to and at the same height above table 20 as shaft 26. A plurality of belts 31 are passed about suitable pulleys on shafts 26 and 30, the lower laps of which are located at a suitable distance above table 20 frictionally to contact the top of a roll A delivered thereto (Fig. 6). There are at least two belts 31 suitably spaced in order that the central portion of the roll A may be contacted by sensing mechanism for controlling the operation of gumming mechanism.

The gumming mechanism comprises a pair of fountain rolls 32 and 33 between which is situated a magazine 34 supporting a plurality of wrappers 35. The magazine is supported by a rod 36 guided in brackets on the framework to which is attached a link 37 having its free end connected to a lever 38 pivoted to the framework and carrying a weight 39 counter-balancing the weight of the magazine and wrappers. The weight is so adjusted that the magazine is always forced upwardly by a very slight force, the upward movement being limited by a plurality of abutments 40 mounted on the framework. Abutments 40 contact the extreme side edges of the uppermost wrapper 35, allowing the wrapper to be lifted from beneath the said abutments. Roll 33 has its lower surface contacting a bath of adhesive and is continuously rotated by means of a chain 45 driven by shaft 26. Roll 32 is likewise dipping into a bath of adhesive and is continuously rotated by means of a chain 46 driven through intermediate gearing 47 and a chain 48 driven by a shaft 30. A transfer roll 50 carried by an arm 51 contacts the surface of roll 32 and a transfer roll 52 carried by an arm 53 contacts the surface of roll 33 and is continuously supplied with a film of adhesive in the usual manner of such devices. Arm 51 is fixed to a shaft to which is affixed a crank plate 55 and arm 53 is fixed to a similar shaft to which is affixed a similar crank plate 56. A connecting rod 57 joins the two crank plates for rota-

tion at the same time and to the same extent, but in opposite directions. A driving rod **58** is pivoted to connecting rod **57** and extends to one end of a crank **59** fixed to a rock shaft **60** mounted on a bracket **61** supported on table **20**. An arm **65** affixed to rock shaft **60** carries a roller **66** located between the belts **31** and normally extending downwardly into the path of any object being rolled forward over the surface of table **20** by the friction of its upper extremity with the belts **31**. The upper end of lever **59** is connected to a link **67** pivoted to a crank **68** fixed to a rock shaft **69** at the opposite end of the bracket **61**. An arm **70** similar to arm **65** carries a roller **71** similar to roller **66** and similarly positioned. The linkage is such that when roller **66** is in the position illustrated in Fig. 1, roller **71** must be maintained above the lower lap of belts **31** and out of contact with any object driven thereby, and vice versa.

The operation of the mechanism described is as follows: A roll of tissue paper may be fed manually or by gravity in a chute into contact with the lower lap of belts **31**. As the roll of tissue paper or other object revolves over the surface of table **20** it will be brought into contact with roller **66**, raising said roller and forcing driving rod **58** and connecting rod **57** toward the right end of Fig. 1. This motion is translated to the transfer rolls **50** and **52** whereby they are revolved toward each other through openings in table **20** and into contact with the end edges of the uppermost wrapper B, thereby applying a bar of adhesive **75** to the forward edge of the wrapper B and a bar of adhesive **76** to the rear edge of the wrapper B (Figs. 5 and 6). The roll A is now driven beyond roller **66** and contacts roller **71** which has been lowered by the connecting linkage. Roller **71** is now raised thereby reversing the transfer rolls **50** and **52** and repositioning them below the table and against the fountain rolls **32** and **33**, respectively. By the same action roller **66** is relowered into the position illustrated in Fig. 1. In this fashion a fresh, moist bar of adhesive is placed upon the wrap immediately before the roll of paper contacts the wrap. The roll A (Fig. 6) now rolls onto the wrapper B and upon contacting bar **75** adheres to wrapper B and rolls itself into the wrapper. Wrapper B is slightly longer than the circumference of roll A and bar **76** will adhere to the outer surface of the wrapper, there being sufficient overlap to provide an efficient joint.

The wrapped roll is progressed to the end of table **20** and by reason of its inertia, or by reason of being contacted by a succeeding roll tends to drop from the end of table **20** into the mechanism shown in Fig. 2, which it is allowed to do at the proper instant, as will appear.

Shaft **22** drives the mechanism of Fig. 2 through a chain **80** and a sprocket **81** (Fig. 3) attached to a shaft **82**. Shaft **82** carries other sprockets and cams whereby various parts of the mechanism are operated in synchronism. One of said sprockets **83**, drives a chain **84** which rotates a second shaft **85**. Fixed to shaft **85** is a mutilated gear **86** meshing with an interrupted gear **87** fixed to a third shaft **88**.

Gear **86** is provided with teeth for approximately one-third of its circumference, the remainder thereof being smoothly surfaced. Gear **87** is provided with three spaced sets of teeth and interrupting smooth concave surfaces. The operation of the gears is to rotate shaft **88** a third of its circumference once for every revolution of shaft **85**, the action being well known and similar to a Geneva movement except that the velocity of gear **87** is constant rather than sinusoidal. Shaft **88** carries a large sprocket **89** which drives a shaft **90** through a chain **91**. Shaft **90** is connected to a sprocket conveyor roll **95** about which is positioned a sprocket conveyor chain **96** passing about an idler sprocket conveyor roll **97**. Chain **96** carries spaced pockets **98** each of a size to receive a paper roll therein. The conveyor is intermittently advanced and intermittently progresses rolls delivered thereto through the wrapper forming mechanism.

Likewise fixed to shaft **82** (Fig. 3) is a sprocket **100** which through a chain **101**, (Fig. 2) and sprocket **102** drives a shaft **103** to which is fixed a cam **104**. A lever **106** supported in the frame carries a cam follower and is rocked by the cam **104** to operate a rock shaft **107** carrying a crank **108** to which is fixed a link **109** extending upward to the end of table **20**. Table **20** is provided with a downwardly extending lip **110**. Extending through slits in the lip **110** are a plurality of fingers **111** affixed to a rock shaft **112** operated by link **109** through a crank **113**. Suitably mounted upon an extension of the frame is a plate **115** so spaced from table **20** as to allow a roll to pass between the edge of the table and the plate, but so close as to prevent passage of the roll when the fingers **111** are projected through the lip **110**. Since cam **104** is operated in synchronism with the movements of conveyor **96**, the roll will not be permitted to leave table **20** until a pocket **98** is momentarily stopped in position to receive it.

As soon as the roll is in position, it is centered by the following means: At the opposite ends of shaft **82** there are provided ring cams **120**, operating suitable mechanisms. The mechanisms at each side of the table are duplicates so that only one need be described. Pivoted to the base of the frame is a large lever **121** carrying a cam follower **122** bearing against the edge of cam **120**. A strong spring **123** extended between levers **121** serves to keep the rollers in contact with the cams. The upper extremity of lever **121** is forked and embraces a plunger **124** guided in a bracket **125** mounted upon the frame. Through a pin and slot connection lever **121** imparts reciprocal movement to plunger **124**. The pin in this instance comprises a horizontally disposed rod **126** extending toward the end of table **20**. Plunger **124** is feathered into bracket **125** so that it is prevented from rotating and rod **126** is maintained in horizontal disposition. Rod **126** is bent inwardly above roll **97** (the inwardly bent portion thereof being supported by a bracket **127'** which prevents rotation of rod **126** about its axis) and carries at its inner extremity a disc **127**. The wrapped roll, as it is dropped into pocket **98**, carries the wrapper B as a cylindrical extension of the surface of the roll. During the time that movement is imparted to the sprocket chain **98** and roll A is dropping into the pocket, disc **127** is maintained beyond the edge of wrapper B due to lever **121** being held in the dotted line position (Fig. 3). As soon as the conveyor comes to a stop the roll settles into the pocket and disc **127** (which is larger than the central orifice of the roll A) is moved inwardly and contacts the end of the roll. The disc **127** at the opposite end of the roll is also moved inwardly and the roll A is accurately centered in the machine thereby. It is of no moment that the wrapper B may be slightly off-center with respect to the

machine, however unlikely it is that it will be. Before the next forward movement of conveyor 96 occurs, discs 127 are retracted and maintained beyond the edges of wrapper B.

The next engagement of the intermittent gearing will move the pocket 98 carrying the centered roll from above roll 97 to a position above shaft 82 and in line with the plungers 124. During the forward movement the roll A is maintained in firm contact with the pocket 98 by the lower lap of a plurality of belts 130 passing about suitable rolls 131 and 132 mounted in the frame, roll 131 being driven through sprockets and a chain 133 driven by shaft 90. Chain 133 is reversed in order to impart the correct direction of travel of belts 130. As soon as the conveyor 96 comes to rest the edges of wrapper B are shaped by the following mechanism: Mounted upon shaft 82 is a box cam 140, operating a yoked pitman 141 having a cam follower guided in the cam track. Pitman 141 extends upward to a crank 142 fixed to a rock shaft 143 mounted in the frame of the machine. The opposite end of rock shaft 143 carries a sprocket 144 about which passes a chain 145. Chain 145 passes about the sprockets on three other rock shafts 146, 147 and 148 and about an idler sprocket 149 mounted in the frame of the machine and serving as a chain tightener. Whatever rotation is imparted to rock shaft 143 is likewise imparted at the same time and extent to rock shafts 146, 147 and 148. Fixed to each of the four rock shafts are two folding hands 155 comprising a central supporting plate 156, lateral extensions 157 and fingers 158 extending parallel to the supporting plate 156 from each side of the lateral extensions 157 (Fig. 4). As clearly seen in Figs. 8, 9 and 10, the folding hands attached to rock shafts 147 and 143 are in alignment, and the folding hands on rock shafts 146 and 148 are in alignment, the first group, however, being offset with respect to the second group so that the fingers 158 and supporting plate 156 of one set may interdigitate with the fingers and supporting plate of the opposed set as far as permitted by the lateral extensions 157. Figs. 7 and 8 diagrammatically illustrate the folding hands as they have partially rotated from their outermost positions, their outermost positions being such as to allow clear passage of the roll A and the conveyor.

As soon as the conveyor comes to a stop rotation is imparted to the rock shafts and the folding hands pass through the position of Figs. 7 and 8 to the position of Figs. 9 and 10, thereby folding the laterally projecting ends of wrapper B into the shape shown in Fig. 9. Inasmuch as the motion of the folding hands is arcuate, a more or less regular appearance will be imparted to the end of the roll by reason of all overlaps of the wrapper B being in the same direction. At this time, due to the shape of the cam track of cam 140, the folding hands will be held in their innermost positions during the time that levers 121 move to their full line position in Fig. 3. The inner ends of plungers 124 are of such diameter that they may be moved longitudinally of the quadrangular bore provided by the lateral extensions 157. As seen in Fig. 10 the edges of wrapper B will be engaged by the inner ends of plungers 124 and moved inwardly into the axial bore of the roll A. Upon retraction of the plungers the wrapper will remain in the position illustrated in Fig. 10.

In order positively to hold the roll in position during the time that the wrapper is being formed around it the following mechanism is employed: Loosely mounted upon shaft 147 is an arm 170 to the hub of which is fixed a roll clamp 171 extending over the position that the roll will occupy when stationary. A tension spring 172 is extended between the end of arm 170 and shaft 146, tending always to press the clamp 171 against the top of a roll positioned beneath it. A crank 173 provided with a laterally extending pin 174 is fixed to shaft 147, the pin 174 extending beyond the arm 170. Upon rotation of shaft 147 to raise its folding hands crank 173 will be rotated in a counter-clockwise direction, the pin 174 engaging arm 170 and raising the clamp 171.

Upon the next feeding movement of conveyor 96 the completely wrapped roll is brought to the end of the frame and drops from the bucket into a chute provided by downwardly extending plates 175 and 176. The roll is now stood on end by the following mechanism: The continuously driven shaft 85 is provided with a sprocket which drives a chain 180 and a shaft 181. The upwardly travelling lap of chain 180 also drives a sprocket 182 fixed to a lower shaft 183. Shaft 181 drives a belt 184 and shaft 183 drives a belt 185 so spaced as to contact the opposite sides of the roll. The roll is raised upward between the belts onto a table 186, upon which table there are mounted shafts and rolls supporting the forward extremities of belts 184 and 185. The rolls pass upward through an opening in the table, adjacent one side of which is placed a guide rod 190 in position to raise one end of the roll as it is fed thereto. The succeeding rolls force the preceding rolls onto the surface of table 186 and in so doing the rolls are stood on end by the guide rod 190. An attendant removes the rolls and packs them into cartons for shipment.

There has been described and illustrated the preferred embodiment of the invention. Modifications in arrangement and detail will be apparent to those skilled in the art and the scope of the invention is to be taken as covering such modifications and alterations in so far as protected by the following claims.

We claim:

1. Means to form the projecting ends of a wrapper about the ends of a roll of paper or the like positioned therein comprising, a plurality of pivotally mounted folding hands, and means to rotate said hands in the same direction and normal to the axis of the roll toward a central position, said means comprising a plurality of sprockets and a single chain engaging and simultaneously rotating each of said sprockets in the same direction and to the same extent.

2. In a machine for wrapping an object having an axial bore, such as a roll of paper or the like, means to wrap the object in a wrapper longer than the circumference of said object and wider than said object, a conveyor having a pocket within which the object and the applied wrapper is positioned, means to progress said conveyor intermittently, means to center said roll relative to said conveyor, means comprising a plurality of folding hands actuated thereafter to form the projecting ends of said wrapper over the ends of the object between successive movements of said conveyor, and means to tuck the extreme ends of the wrapper into the bore of said object comprising a plunger and means to move the same axially inward after operative movement of said folding hands.

3. In a machine for wrapping an object having an axial bore, such as a roll of paper or the like, means to wrap the object in a wrapper

longer than the circumference of said object and wider than said object, a conveyor having a pocket within which the object and the applied wrapper is positioned, means to progress said conveyor intermittently, means to center said object relative to said conveyor, means actuated thereafter to form the projecting ends of said wrapper over the ends of the object between successive movements of said conveyor, and means to tuck the extreme ends of the wrapper into the bore of said object, said tucking means comprising a pair of plungers located each at a side of the conveyor, and said centering means comprising arms extending from said plungers and movable therewith.

4. In a machine for wrapping a cylindrical object, means for applying a wrapper about said object with the ends thereof projecting beyond said object, and means to form the projecting ends of said wrapper over the ends of said object comprising a plurality of folding hands and means to rotate said hands toward a central position, each said hand consisting of a supporting plate, lateral projections at each side of said plate intermediate the ends thereof, and parallel fingers carried by said projections, said fingers being interdigitated during the rotation of said hands.

JOHN EDWARD BLOSSER.
PAUL BURKE.