(No Model.)

S. J. JACOBS.

MEANS FOR ATTACHING AND DETACHING ELECTRIC LAMP BULBS.

No. 431,721. Patented July 8, 1890.

Fig. 3.

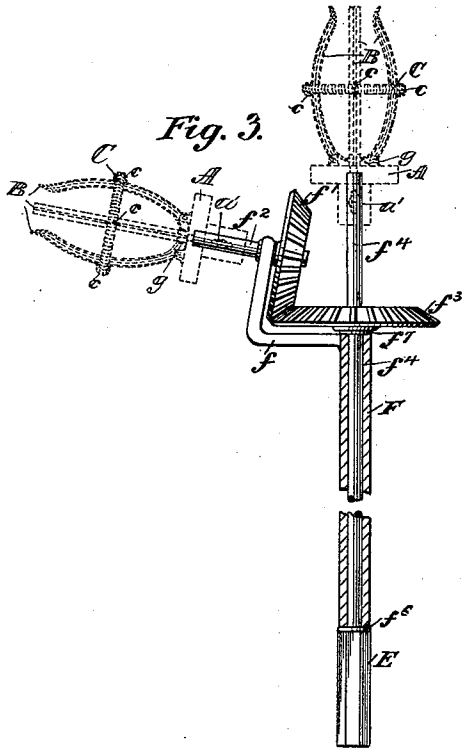

Fig. 4.

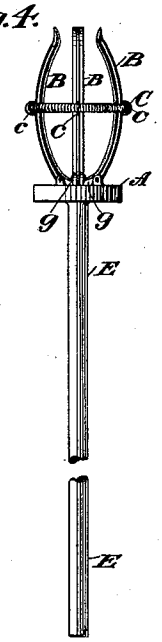

Fig. 1.

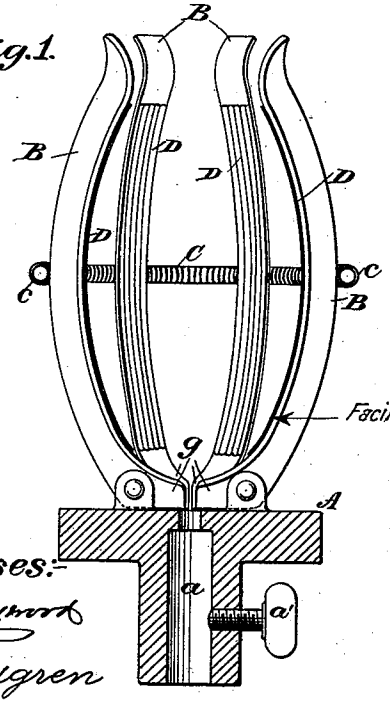

Fig. 2.

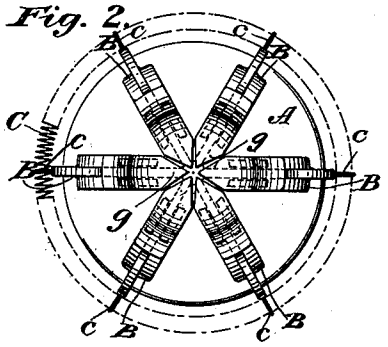

Witnesses:-
D. N. Kaymond
C. L. Sundgren

Inventor:-
Solomon J. Jacobs
by his attorneys
Brown & Seiwell.

THE NORRIS PETERS CO., PHOTO-LITHO., WASHINGTON, D. C.

UNITED STATES PATENT OFFICE.

SOLOMON J. JACOBS, OF NEW YORK, N. Y.

MEANS FOR ATTACHING AND DETACHING ELECTRIC-LAMP BULBS.

SPECIFICATION forming part of Letters Patent No. 431,721, dated July 8, 1890.

Application filed February 24, 1890. Serial No. 341,421. (No model.)

To all whom it may concern:

Be it known that I, SOLOMON J. JACOBS, of the city, county, and State of New York, have invented a certain new and useful Improvement in Means for Attaching and Detaching Electric-Lamp Bulbs, of which the following is a specification.

My improvement is designed to effect the attachment and detachment of the bulbs of incandescent electric lamps to and from their sockets.

I will describe in detail a tool embodying my improvement, and then point out the novel features in claims.

In the accompanying drawings, Figure 1 is a vertical section of a tool embodying my improvement. Fig. 2 is a plan or top view of the same. Fig. 3 is a detail view showing certain means for operating the tool. Fig. 4 is a view showing a slight modification.

Similar letters of reference designate corresponding parts in all the figures.

A designates a base-piece, which may be made of metal, and is shown as circular in shape. In the example of my improvement shown in Fig. 1 this base-piece is provided upon one side with a socket *a*. A set-screw *a'* extends through the wall of said socket into the interior thereof. Upon the upper side of the base-piece A are pivoted a number of fingers B. These fingers are shown as arc-shaped in their general outline, and when looked at in plan, as in Fig. 2, form radii of a circle of which the center of the base-piece A is the axis. They extend in the same general direction. The outer end portions of the fingers B extend inwardly toward each other; but near their ends they are shown as outwardly-flaring. When the fingers occupy the position shown more clearly in Fig. 1, the space inclosed by them will be substantially that of an ordinary incandescent-lamp bulb. Surrounding the fingers B, and about midway in their heights, is a spring C, here shown as a metallic coil-spring, but which may be an elastic band—as, for instance, of india-rubber. This spring is secured by means of loops *c* upon the fingers, so as to be maintained in position thereon.

The inner surfaces of the fingers B are faced with any suitable frictional material—such, for instance, as india-rubber or leather D. I prefer that this material be corrugated or provided with nodules in any suitable manner, as shown. In using the tool the outer ends of the fingers are pressed against the enlarged end of the lamp-bulb, and by continued pressure the fingers will be forced over the bulb, the spring C yielding to admit of this. When forced fully over the bulb, the contraction of the spring C will cause the fingers to grip the bulb, and the frictional material thereon will offer such resistance to the rotation of the fingers about the bulb that when the tool is rotated the bulb will rotate with it, and may thus be readily detached from its socket or attached thereto, according to the direction in which the tool is rotated. Where the bulbs hang vertically, or substantially so, I will, in the example of my improvement shown in Fig. 1, insert a straight handle within the socket *a*, and clamp it there by means of the screw *a'*. By this means the tool may be readily rotated.

In Fig. 4 I have shown that the handle E may be made integral with the base-piece A and the socket *a* omitted.

In Fig. 3 I have shown means for operating the tool where the lamps extend horizontally, or approximately so. In such case I employ a hollow sleeve F, from the upper end portion of which extends a bracket *f*. Journaled in this bracket is a bevel gear-wheel *f'*, the shaft f^2 of which extends for a distance beyond the bracket *f*. The bevel gear-wheel *f'* meshes with another gear-wheel f^3, mounted upon one end of a spindle f^4, which extends loosely through the sleeve F. The lower end portion of the spindle f^4 beyond the sleeve F is provided with a handle E of greater diameter than the sleeve F. Between the end of the sleeve F and the handle E, I have shown a washer f^6, and between the other end of the sleeve F and the gear-wheel f^3 another washer f^7. The shaft f^2 of the gear-wheel *f'* is to be secured in the socket *a* of the tool. By then grasping the sleeve F with one hand and rotating the handle E with the other it will be quite clear that rotary motion will be imparted to the tool. The spindle f^4 may also be extended, as shown, in order that the tool may be used upon bulbs which hang vertically.

Upon the fingers B, I have shown stops *g*,

which will prevent a too extended inward swinging of the said fingers. The stops might, however, be arranged upon the base A.

What I claim as my invention, and desire to secure by Letters Patent, is—

1. The herein-described attaching and detaching device, consisting of a handle, a base-piece at the upper end of the handle, curved grasping-fingers pivoted at their lower ends to the base-piece and flaring outwardly at their upper ends, the said fingers being provided with facing-pieces of frictional material upon their inner sides, and a spring uniting said fingers and tending to draw them toward one another, substantially as set forth.

2. The herein-described attaching and detaching device, consisting of a handle provided at its upper end with a laterally-extending bracket, a rotary shaft secured in the bracket, a rotary spindle secured in the body of the handle and projecting beyond the end of the handle in a line therewith, and having its projecting end fitted to receive a grasping device, gear connecting the said rotary spindle, and grasping devices adapted to be secured to said rotary shaft and spindle, substantially as set forth.

SOLOMON J. JACOBS.

Witnesses:
FREDK. HAYNES,
C. E. LUNDGREN.