May 10, 1938. I. H. KENDALL 2,116,865

MECHANISM FOR RECEIVING AND DUMPING MILK

Filed Aug. 23, 1935 4 Sheets-Sheet 1

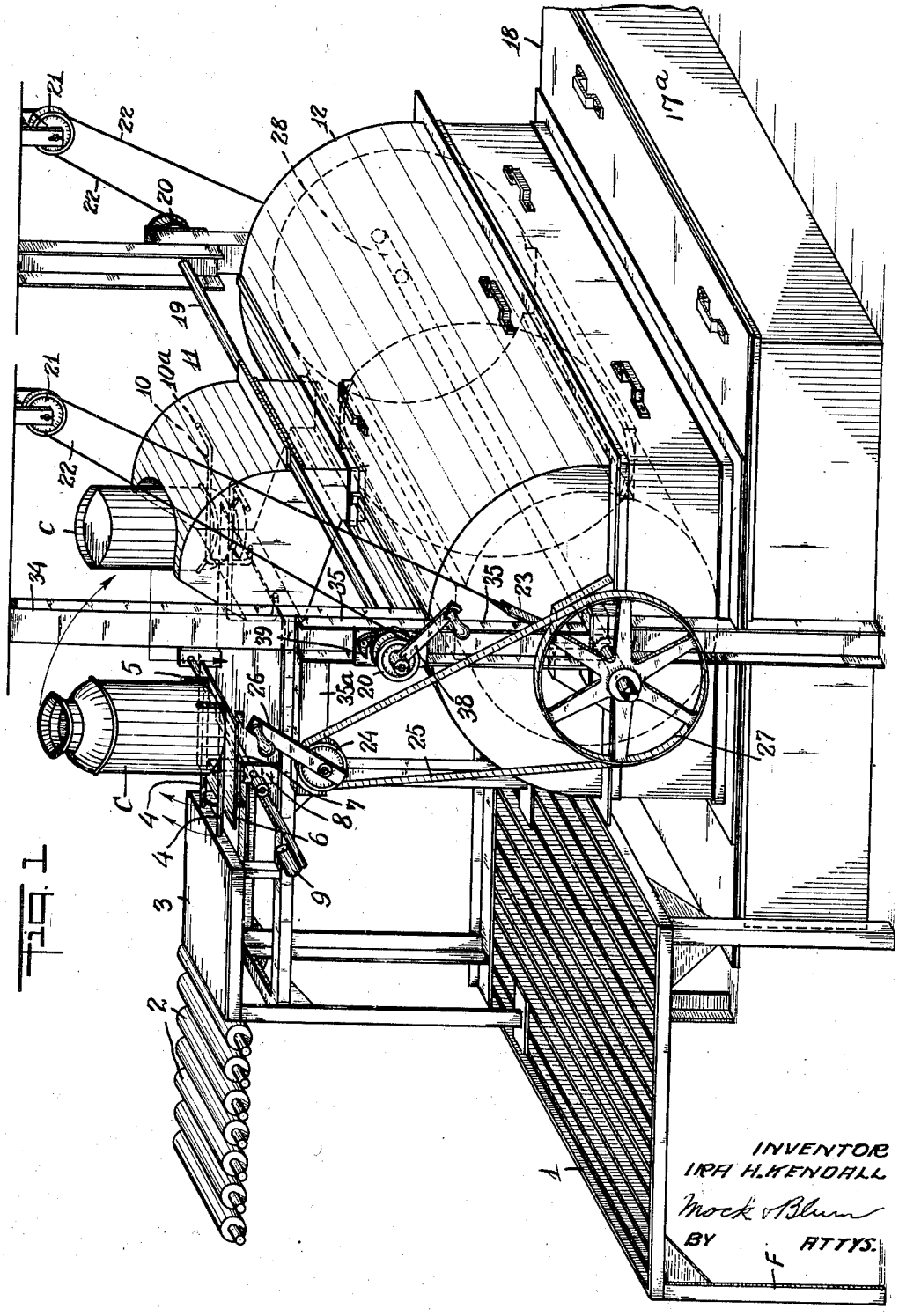

Fig. 1

May 10, 1938. I. H. KENDALL 2,116,865

MECHANISM FOR RECEIVING AND DUMPING MILK

Filed Aug. 23, 1935 4 Sheets-Sheet 2

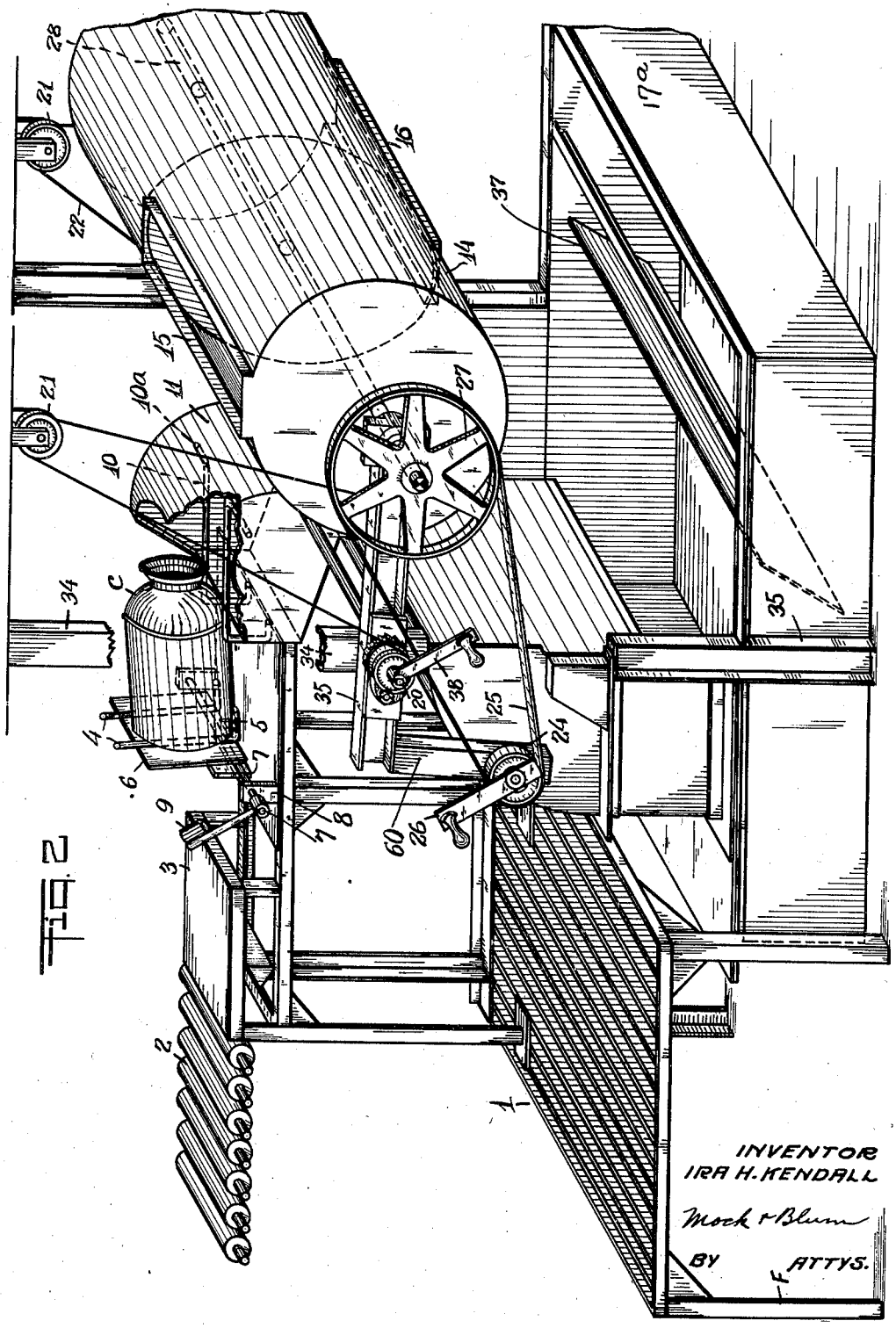

FIG. 2

May 10, 1938. I. H. KENDALL 2,116,865

MECHANISM FOR RECEIVING AND DUMPING MILK

Filed Aug. 23, 1935 4 Sheets-Sheet 3

Fig. 3

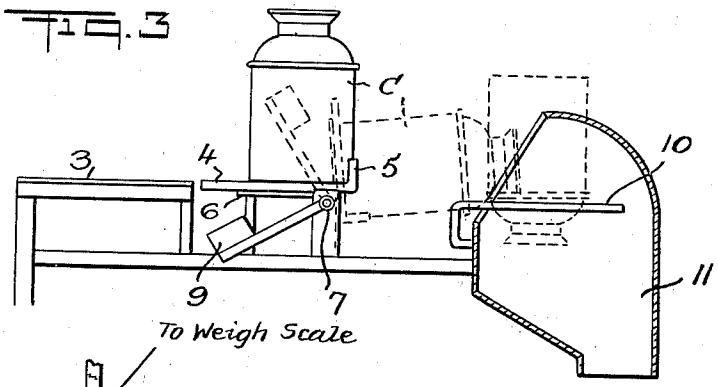

Fig. 4

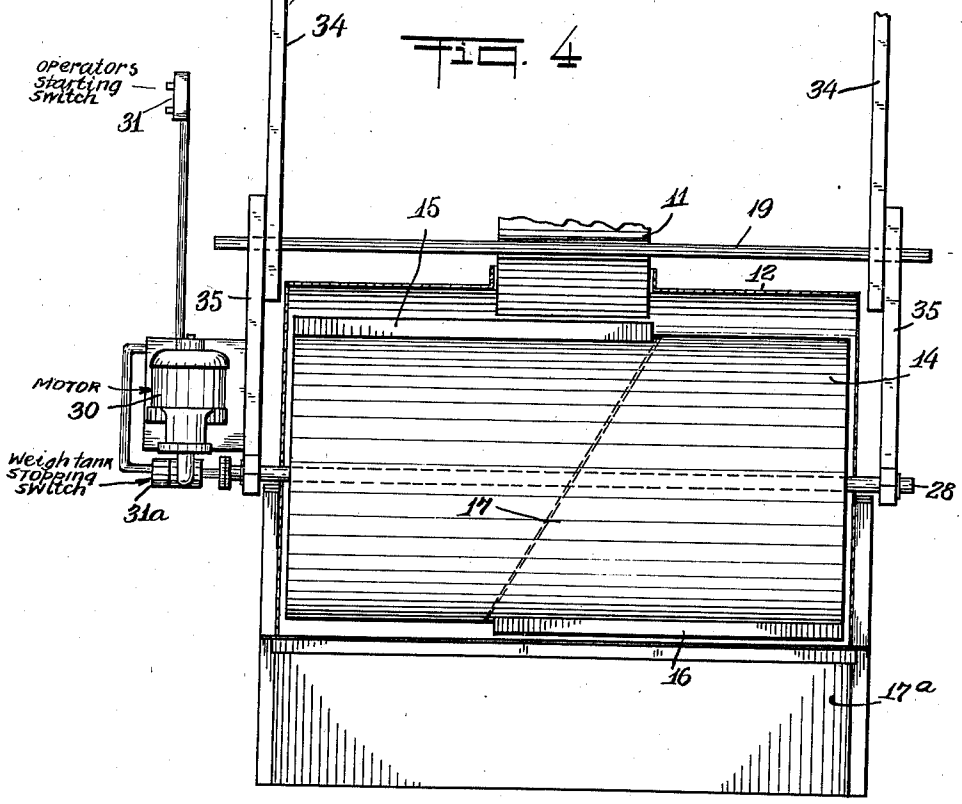

INVENTOR.
IRA H. KENDALL.
BY Mock & Blum
ATTORNEYS.

May 10, 1938. I. H. KENDALL 2,116,865

MECHANISM FOR RECEIVING AND DUMPING MILK

Filed Aug. 23, 1935 4 Sheets-Sheet 4

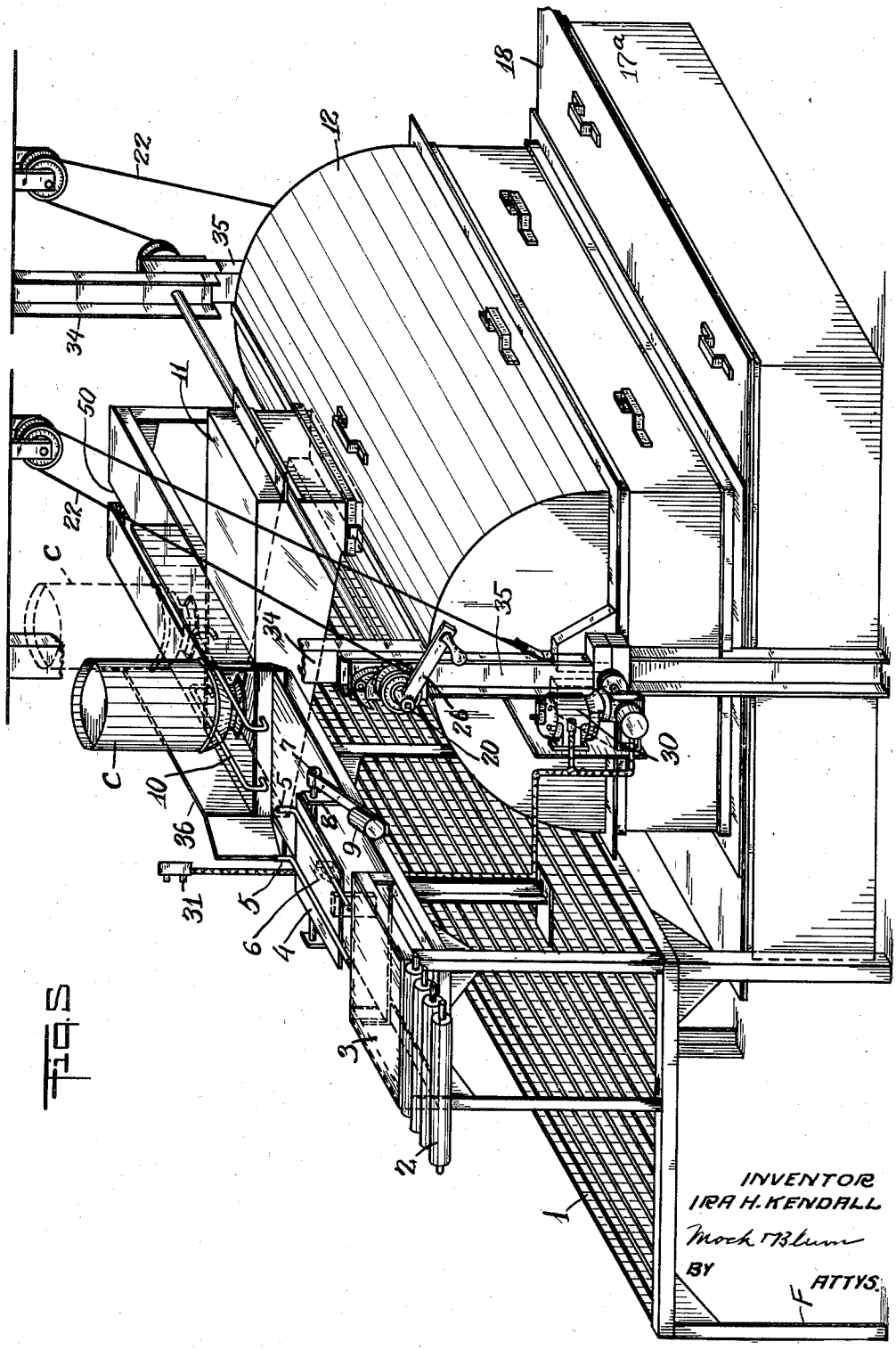

Patented May 10, 1938 2,116,865

UNITED STATES PATENT OFFICE

2,116,865

MECHANISM FOR RECEIVING AND DUMPING MILK

Ira H. Kendall, Potsdam, N. Y., assignor to Genevieve A. Kendall, Potsdam, N. Y.

Application August 23, 1935, Serial No. 37,412

4 Claims. (Cl. 221—69)

My invention relates to a new and improved method of, and a new and improved mechanism for, receiving, dumping, and weighing milk.

One of the objects of my invention is to provide an improved system for this purpose in creameries and the like.

Another object of my invention is to provide an improved system for dumping the milk.

Another object of my invention is to provide an improved weigh can, which will be of simple and cheap construction, and which will eliminate the necessity of providing expensive valves.

Another object of my invention is to provide a turnable weigh can, which cooperates with a dumping tank, said weigh can having two operative positions, which are spaced apart 180°.

Another object of my invention is to provide a weigh can which is operative in a plurality of positions.

Another object of my invention is to devise an apparatus which can be readily inspected and cleaned.

Another object of my invention is to provide improved means for handling and dumping the milk.

Other objects of my invention will be set forth in the following description and drawings, which illustrate preferred embodiments thereof, it being understood that the above general statements of the objects of my invention are intended merely for purposes of illustration, and not as a limitation.

Fig. 1 is a perspective view illustrating the device, one can being illustrated in the dumping position, another can being illustrated in the position preliminary to the dumping.

Fig. 2 is a view generally similar to Fig. 1, showing the can in the intermediate position, which is between the preliminary position shown in Fig. 1, and the dumping position shown in Fig. 1. Fig. 2 also shows certain parts of the mechanism in the raised position, in order to permit inspection and cleansing.

Fig. 3 is a detail side elevation of certain of the parts illustrated in Fig. 1 and in Fig. 2.

Fig. 4 is a side elevation showing certain details of the apparatus, and this also illustrates a certain modification of the invention.

Fig. 5 is a general perspective view showing another embodiment of the invention, and including certain of the features illustrated in Fig. 4.

Heretofore, it has been well known to provide a weigh can, in which milk was received and weighed, prior to dumping the milk into a suitable tank or container. These weigh cans, as heretofore manufactured, have been stationary, and it was necessary to provide said cans with expensive valves, and with several compartments, in order to drain the milk, while permitting continuous operation and continuous weighing.

These prior devices were therefore expensive to manufacture, and they were not readily inspected and cleansed.

According to my invention, I provide an improved system whereby the milk can is handled more efficiently, the entire contents of the milk can be dumped, and a valveless and turnable weigh can is provided.

Referring to Fig. 1, this shows mechanism having a frame F, and a platform **1**, upon which the attendant stands. Above the platform **1**, a roller-conveyor **2** is mounted. This may be of any suitable and well-known type. The upright cans C are placed upon the roller conveyor **2**, and said cans are rolled until they reach the platform **3**. This can be done by means of gravity, since the roller conveyor **2** may be inclined downwardly. After the cans have come to rest upon the platform **3**, or upon the rear edge part of the platform **3**, they are pushed by hand upon the spaced rods **4**. As shown in Fig. 3, the rods **4** are spaced from the platform **3**. The rods **4** are connected to plate **6**. This plate **6** is mounted upon a shaft **7**, which is suitably connected to the frame of the machine. The shaft **7** is provided with a counterweight **9**, which is connected to the shaft **7** by means of a suitable arm. The rods **4** have vertical ends **5**.

The shaft **7** is mounted in bearings **8**.

After the upright can has reached the position which is illustrated in Fig. 1, it is turned until it occupies the horizontal position which is shown in Fig. 2. Referring to Fig. 2, when the can is in the horizontal position, the front of the can rests upon rods **10**, said rods having lateral horizontal legs **10***a*. These rods **10** are located in a dump-tank **11**, and the lateral legs **10***a* of the rods **10** are rigidly connected to the adjacent vertical walls of the dump tank **11**. The can C can therefore be turned into the position shown in Fig. 2, and the can can then be inverted. In said inverted position the open end of the can is located between the parallel rods **10**, and the breast of the can rests upon said rods **10**. While the can is in this inverted position, the milk therein is drained into the dump tank **11**.

Referring to Fig. 3, the bottom end of the

dump tank 11 is provided with a suitable outlet or pouring spout.

The weigh can 14 is turnably mounted on a shaft 28. Said weigh can 14 is provided with a partition which is inclined to the longitudinal axis of said weigh can, and it is also provided with outlet ports or openings 15 and 16, which are angularly spaced apart 180°. Due to the offset relation of one opening 15 with respect to the other opening 16, one of said openings is always aligned with the outlet of the dump tank 11, if the tank is turned 180° from the position illustrated in Fig. 4. The partition 17 divides the weigh can 14 into two chambers, and each said chamber has a closed bottom end when its open upper end is aligned with the outlet of the weigh can 11, However, by turning the weigh can 180°, the filled chamber has its opening located at the bottom thereof, so that the milk can be drained from said chamber into the drop tank 17*a*, which has the usual cover 18.

It is therefore entirely unnecessary to provide any valves or the like for the weigh can, since one chamber thereof automatically receives and retains the milk in one position thereof, and the milk is automatically drained from said chamber by turning the weigh can 180°, at which time the other chamber of the weigh can is brought into operative position underneath the outlet of the dump tank 11.

The shaft 28 of the weigh can 14 is mounted in hangers 35, which depend from a shaft 19. The shaft 19 is supported by hangers 34 and these hangers 34 are connected to the weigh scale, so that the weight of each charge of milk which is dumped into one of the chambers of the weigh can 14, can be determined.

It will be noted that while one chamber of the weigh can is being filled, the other chamber is being drained. The weight of each charge of milk can be determined, as the same is allowed to pour into the receiving chamber of the weigh can 14.

In Fig. 1, I have shown hand operated mechanism for turning the weigh can 14. Said weigh can 14 is provided with a removable cover 12, in order to clean the weigh can.

As shown in Fig. 1, the shaft 28 upon which the weigh can 14 is mounted, is provided with a sprocket 27, which is connected by a chain 25 to a smaller sprocket 24. The sprocket 24 is pivotally mounted in a frame member 35*a*, which is rigidly connected to the hanger 35, adjacent thereto. The diameter of the sprocket 24 is one-fourth the diameter of the sprocket 27. Hence, by turning the sprocket 24 two complete revolutions, the sprocket 27 and the shaft 28 and the weigh can 14, are turned half a revolution.

In order to cleanse and inspect the device, the weigh can and certain accessory parts can be turned from the position shown in Fig. 1, to the position shown in Fig. 2. For this purpose a pair of cables 22 are provided, and these pass around idlers 21. One of the runs of each of these cables 22 is suitably connected to the weigh can 14, at or adjacent the shaft 28, so as to permit the free turning of the weigh can 14. For example, the cable 22 which is shown at the left-hand side of Fig. 1, can be connected directly to the shaft 28, or to a strap 23 which passes around said shaft 28. The other cable 22 can be connected to its end of the shaft 28, in a similar manner.

Each of said cables 22 has the left-hand run thereof connected to a pulley 20, and said pulleys 20 are connected to the shaft 19, so as to turn in unison therewith. Said shaft 19 and the pulleys 20, can be turned by means of a crank handle 38. The shaft 19 is provided with the usual ratchet wheel, with which a pawl 39 meshes, so that the parts will be held in the position illustrated in Fig. 2, until the pawl 39 is manually released.

By turning the crank handle 38 and the shaft 19 in the clockwise direction, the weigh can 14 is raised from the position shown in Fig. 1 to the position shown in Fig. 2. This enables free access to the drop-tank 17 which is provided with a partition 37, in order to prevent the milk from splashing as it enters said drop-tank 17.

The partition 37 is inclined, and its upper and lower edges are spaced from the top and bottom edges of the tank.

In systems of this type, it is customary to provide some device for securing samples of each batch of milk, in order to make up a composite sample which can be tested for butter-fat content and the like. Due to different conditions which may prevail in different plants, I have not shown any such device in connection with the system illustrated herein, but it is clear that numerous types of such testing or sample-taking devices can be installed in connection with the present system.

In the embodiment shown in Figs. 4 and 5, I have illustrated an electric motor 30, for turning the weigh can 14. Said motor 30 is provided with a starting switch 31. It is also provided with a stopping switch 31*a*, which may be of any conventional magnetic type, so that the turning of the weigh can 14 is interrupted at the end of each half revolution. This type of stopping switch is well known per se, and I have therefore not specifically illustrated the same.

In the embodiment shown in Fig. 5, I have shown how my system is adapted for use in an installation in which the roller conveyor is preferably arranged parallel to the longitudinal axis of the tank.

The parts are substantially the same as before, save that I have illustrated a guard 36 in combination with the rods 10.

The dotted line position of the can which is illustrated in Fig. 5, shows the position which is immediately subsequent to the dumping position. The dumping position is shown in full lines, and the can is moved from this position, to the dotted line position, by hand. After the can has been pushed by hand to the dotted line position shown in Fig. 4, it can be engaged by the dogs of any suitable can washing machine, and said dogs can operate in the slot 50.

It will be noted that the offset or horizontal distance between the ends of the inclined partition 17 is at least equal to the length of the outlet of the tank 11, measured in a direction parallel to the longitudinal axis of the weigh can. Said offset or horizontal distance is preferably greater than the length of the outlet of the tank 11. This insures full and perfect registration between the outlet of the tank 11 and the respective chamber of the weigh can 14, in each 180° position of said weigh can 14.

While I have shown the weigh can as being divided into two chambers, I do not wish to exclude from the scope of the invention a weigh can which has three or more chambers. One of the features of the invention is that the weigh can is divided into a plurality of chambers, that each said chamber has an opening by means of which milk is poured into or drained from said

chamber, and that at least one of said openings is in the draining position, while at least another of said openings is in the non-draining position. This non-draining position may be the receiving position, but this is not absolutely necessary in certain aspects of the invention.

I do not wish to be limited to an angular spacing of 180°, between the respective openings of the respective chambers.

I have shown the partition 17 as inclined, so that when the milk is poured into the receiving chamber, the milk flows to the bottom of the weigh can 14. This is desirable, because it secures a more balanced operation. However, I do not wish to exclude from the scope of my invention a weigh can having a horizontal partition passing through the longitudinal axis of the weigh can, in which case the openings 15 and 16 may extend substantially along the entire length of the weigh can. However, the last mentioned form is not as desirable as the embodiment described herein, because the milk in the receiving chamber is then located wholly above the center of gravity of the weigh can, or the central axis thereof, so that an unbalanced cylinder is thereby secured. For some purposes, the openings or ports in the wall of the can may be provided with valve or closure devices, but such closure devices are rendered unnecessary by my invention, thus lowering the cost of production, and the time and expense of operation.

Likewise, in the broadest aspects of the invention, the same is not necessarily limited to a weigh can having two or more chambers and a stationary dump tank.

It will be noted that the weigh-can 12 is free from any surrounding shell, so that the milk is poured directly from the weigh-can to the drop-tank 17*a*. As shown in Fig. 1, the cover 18 has an upstanding extension, which has three walls. The milk is not poured out of the filled chamber of the weigh can until the port of said chamber is below the top of said extension of the cover.

I have shown preferred embodiments of my invention but it is clear that numerous changes and omissions can be made without departing from its spirit.

I claim:

1. Apparatus for weighing and handling milk, comprising a turnable weigh-can mounted on a shaft, means supporting said shaft and adapted to be connected to a scale, a filling device located above said weigh-can and having an outlet port, a receiving tank located below said weigh-can and having an inlet, a partition located within said weigh-can and inclined to the longitudinal axis of the weigh-can and dividing the interior of the weigh-can into two chambers, each said chamber having a chamber port in its wall, said chamber ports having portions which are superposed when one of said ports is in its highest position and the other chamber port is in its lowest position, the top chamber port being then vertically aligned with the entire outlet port of said filling device and the entire bottom chamber port being then vertically aligned with the inlet of said receiving tank, said receiving tank having its inlet located so that said inlet is located below the bottom chamber port to receive the milk which flows out of said bottom chamber port as soon as said bottom chamber port is sufficiently low to permit milk to pass out of the filled chamber and before said chamber port of the filled chamber has reached its lowest position.

2. Apparatus for weighing and handling milk, comprising a turnable weigh-can mounted on a shaft, means supporting said shaft and adapted to be connected to a scale, a filling device located above said weigh-can and having an outlet port, a receiving tank located below said weigh-can and having an inlet, a partition located within said weigh-can and inclined to the longitudinal axis of the weigh-can and dividing the interior of the weigh-can into two chambers, each said chamber having a chamber port in its wall, said chamber ports having portions which are superposed when one of said ports is in its highest position and the other chamber port is in its lowest position, the top chamber port being then vertically aligned with the entire outlet port of said filling device and the entire bottom chamber port being then vertically aligned with the inlet of said receiving tank, said receiving tank having its inlet at its top and having an upward extension of sufficient height to extend above the chamber port of the filled chamber, before said chamber port has been lowered to a position in which the milk flows out of the filled chamber.

3. In a system for handling milk, a turnable weigh-can mounted upon a first shaft, a receiving tank located below said weigh-can, a filling device mounted above said weigh-can, said weigh-can having a port which registers either with the filling device or with the receiving tank when the weigh-can is turned, a movable support in which said shaft is mounted, a second shaft on which said support is mounted, said second shaft being located above the first shaft when the weigh-can is in operative position, said support and the first shaft being turnable relative to the axis of the second shaft.

4. In a system for handling milk, a draining device, said draining device being open at its upper end, said draining device having a pair of spaced rods, the distance between said rods being greater than the diameter of the neck of a milk can, and being less than the diameter of the breast of a milk can, a turnable plate located adjacent said draining device, said plate having upstanding members which are adapted to support a milk can in the horizontal position, the opening in said draining device being sufficiently large to permit the milk can to enter said draining device, when said plate is turned so as to move the can from a vertical position to a horizontal position in which the can is supported upon said rods.

IRA H. KENDALL.