(12) INTERNATIONAL APPLICATION PUBLISHED UNDER THE PATENT COOPERATION TREATY (PCT)

(19) World Intellectual Property Organization
International Bureau

(43) International Publication Date
18 September 2008 (18.09.2008)

PCT

(10) International Publication Number
WO 2008/111934 A1

(51) International Patent Classification:
A47F 3/04 (2006.01) *F25D 23/12* (2006.01)

(21) International Application Number:
PCT/US2007/006173

(22) International Filing Date: 12 March 2007 (12.03.2007)

(25) Filing Language: English

(26) Publication Language: English

(71) Applicant *(for all designated States except US)*: **CARRIER CORPORATION** [US/US]; One Carrier Place, Farmington, CT 06034 (US).

(72) Inventors; and
(75) Inventors/Applicants *(for US only)*: **SEISS, Richard A.** [US/US]; 208 Cates Pond Court, Spartanburg, SC 29301 (US). **UPTON, Ronald D.** [US/US]; 110 Rivergate Trace, Spartanburg, SC 29303 (US).

(74) Agent: **BIGELOW, Dana F.**; 250 South Clinton Street, Suite 300, Syracuse, NY 13202 (US).

(81) Designated States *(unless otherwise indicated, for every kind of national protection available)*: AE, AG, AL, AM, AT, AU, AZ, BA, BB, BG, BR, BW, BY, BZ, CA, CH, CN, CO, CR, CU, CZ, DE, DK, DM, DZ, EC, EE, EG, ES, FI, GB, GD, GE, GH, GM, GT, HN, HR, HU, ID, IL, IN, IS, JP, KE, KG, KM, KN, KP, KR, KZ, LA, LC, LK, LR, LS, LT, LU, LY, MA, MD, MG, MK, MN, MW, MX, MY, MZ, NA, NG, NI, NO, NZ, OM, PG, PH, PL, PT, RO, RS, RU, SC, SD, SE, SG, SK, SL, SM, SV, SY, TJ, TM, TN, TR, TT, TZ, UA, UG, US, UZ, VC, VN, ZA, ZM, ZW.

(84) Designated States *(unless otherwise indicated, for every kind of regional protection available)*: ARIPO (BW, GH, GM, KE, LS, MW, MZ, NA, SD, SL, SZ, TZ, UG, ZM, ZW), Eurasian (AM, AZ, BY, KG, KZ, MD, RU, TJ, TM), European (AT, BE, BG, CH, CY, CZ, DE, DK, EE, ES, FI, FR, GB, GR, HU, IE, IS, IT, LT, LU, LV, MC, MT, NL, PL, PT, RO, SE, SI, SK, TR), OAPI (BF, BJ, CF, CG, CI, CM, GA, GN, GQ, GW, ML, MR, NE, SN, TD, TG).

Published:
— *with international search report*
— *before the expiration of the time limit for amending the claims and to be republished in the event of receipt of amendments*

(54) **Title:** FOOD PREPARATION APPARATUS WITH SLIDING COVER

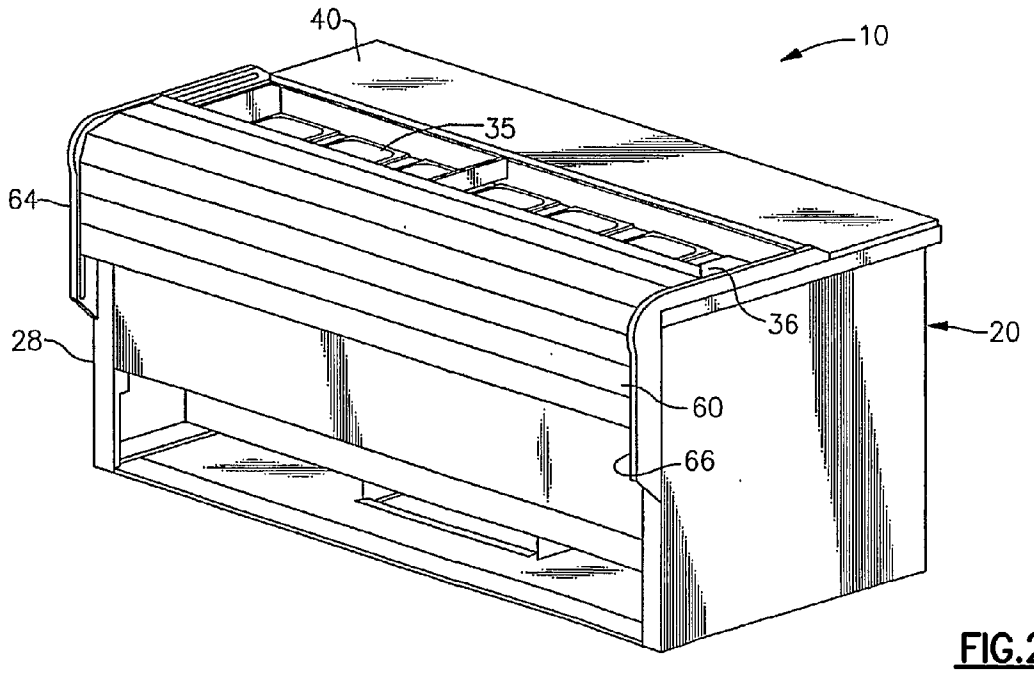

FIG.2

(57) **Abstract:** A food preparation apparatus for use in preparing selected foodstuffs into a prepared food product includes a cabinet defining a food storage compartment, a food preparation surface disposed atop the food storage compartment and an open top plenum located adjacent the food preparation surface. A cover is selectively slidably positionable between a first position whereat the cover extends across the open top plenum and a second position whereat the open top plenum is uncovered and the cover is stowed.

WO 2008/111934 A1

Food Preparation Apparatus With Sliding Cover

Field of the Invention

[0001] This invention relates generally to food preparation apparatus and, more particularly, to food preparation tables including a food preparation surface and refrigerated condiment pans disposed adjacent the food preparation surface.

Background of the Invention

[0002] Food preparation apparatus having a counter top food preparation surface are commonly referred to as food preparation tables. Food preparation tables are commonly installed in restaurants, delis, sandwich shops and other food preparation establishments. Often, such food preparation tables include a cabinet housing a refrigeration unit and a refrigerated food storage compartment. A food preparation surface is disposed atop the cabinet housing and a plurality of removable condiment pans are disposed adjacent, typically behind, the food preparation surface. The condiment pans typically have a rectilinear bowl-like depression which extends downwardly into the food storage compartment within the cabinet housing when the condiment pans are in place. When the food storage compartment is refrigerated, the foodstuffs within the condiment pans are thereby maintained in an appropriate chilled condition.

[0003] Generally, food preparation tables are provided with some form of lid for covering the condiment pans when not in use to help maintain the food stuffs therein in a chilled condition and conserve energy. In the simplest form, the lids are merely removable thin covers that are placed over the condiment pans when the food preparation table is not in use. When the food preparation table is placed in service, the lids are simply removed completely to provide access to the condiment pans and stored elsewhere until the food preparation table in no longer in use. Additionally, such lids are poor insulators even when in place.

[0004] In one embodiment, U.S. Patent No. 5,168,719 discloses a food preparation table utilizing a hinged lid for covering the condiment pans that flips up and back to provide access to the condiment pans. The lid remains in its upright and back position while the condiment pans are being accessed. Such lids tend to get in

the way of food preparation personnel using the food preparation surface and may at times interfere with shelving disposed above the food preparation table. Such flip-up lids are typically simply made of sheet metal and are poor insulators. In another embodiment, U.S. Patent No. 5,168,719 discloses use of a hinged canopy for in covering the condiment pans of a food preparation table. The canopy is rotated rearward to provide access to the condiment pans and remains in its rearward position while the condiment pans are being accessed. Consequently, such canopy lids also tend to get in the way of food preparation personnel using the food preparation surface.

[0005] Further examples of food preparation tables are disclosed in U.S. Patent Nos. 2,886,395; 4,457,140; 4,685,311; 4,802,340; 5,282,367; 5,363,672; 6,068,356; 6,089,036; 6,151,905; 6,385,990; 6,612,124; and 6,941,765.

Summary of the Invention

[0006] A food preparation apparatus is provided for use in preparing selected foodstuffs into a prepared food product. The food preparation apparatus includes a cabinet defining a food storage compartment, a food preparation surface disposed atop the food storage compartment, and an open top plenum located adjacent the food preparation surface that opens to the food storage compartment. A cover is slidably translatable between a first position whereat the cover extends across the open top plenum and a second position whereat the open top plenum is uncovered and the cover is stowed. The cover may be selectively positioned at at least one location intermediate the first position and the second position. In an embodiment, the food storage compartment maybe refrigerated.

[0007] In an embodiment, a first track member and a second track member are mounted to the cabinet in longitudinally spaced relationship. The cover is supported between the first and second tracks and is selectively slidably positionable along the tracks to any desired position between a first position whereat the cover fully extends across the open top plenum and a second position whereat the open top plenum is fully uncovered and the cover is stowed. In an embodiment, the first longitudinal end of each cover segment is received into a travel guide defined by the

first track member and the second longitudinal end of each cover segment is received into a travel guide defined by the second track member.

[0008] In an embodiment of the food preparation apparatus, the cover includes a plurality of longitudinally extending cover segments assembled in side-by-side relationship to form a segmented cover. The forward most cover segment of the segmented cover may include a handle. In an embodiment, a first cover segment is assembled to a second cover segment by means of a longitudinally extending latch member extending outwardly from a longitudinal edge of the first cover segment into a longitudinally extending slot formed in a wall of the second cover segment. Each of the cover segments may include a first end cap mounted to a first longitudinal end of the cover segment and a second end cap mounted to a second longitudinal end of the cover segment.

[0009] In an embodiment, the first track member defines a first travel slot and is mounted to a first end of the cabinet and the second track member defines a second travel slot and is mounted to a second end of the cabinet longitudinally opposite the first end of the cabinet. In this embodiment, the first end cap has a pin protruding outwardly into a first travel slot defined by the first track member and the second end cap has a pin protruding outwardly into a second travel slot defined by the second track member.

[0010] In an embodiment of the food preparation apparatus, the first track member is a generally L-shaped track member having a first leg extending along an upper horizontal surface of the cabinet and a second leg extending along a vertical surface of the cabinet, and the second track member comprises a generally L-shaped member track having a first leg extending along the upper horizontal surface of said cabinet and a second leg extending along the vertical surface of the cabinet. The L-shaped track members maybe made as a single integral member or may be an assembly of two or more segments.

Brief Description of the Drawings

[0011] For a further understanding of the invention, reference will be made to the following detailed description of the invention which is to be read in connection with the accompanying drawing, where:

[0012] FIG. 1 is a front perspective view of an exemplary embodiment of a food preparation table in accord with the invention;

[0013] FIG. 2 is a rear perspective view of an exemplary embodiment of a food preparation table in accord with the invention;

[0014] FIG. 3 is an exploded perspective view of the sliding cover and track assembly of the food preparation table of FIG. 1;

[0015] FIG. 4 is a sectioned side elevation view of an exemplary embodiment of the sliding cover of the food preparation table of FIG. 1 with the cover in its closed position;

[0016] FIG. 5 is a sectioned side elevation view of an exemplary embodiment of the sliding cover of the food preparation table of FIG. 1 with the cover in its open position;

[0017] FIG. 6 is an enlarged sectioned side elevation view of the forward portion of the cover of FIGs. 4 and 5;

[0018] FIG. 7 is a perspective view of an exemplary embodiment of an end cap for the a segment of the cover;

[0019] FIG. 8 is an exploded perspective view illustrating assembly of the end cap of FIG. 7 to a segment of the cover;

[0020] FIG. 9 is a rear elevation view of an exemplary embodiment of a food preparation table equipped with a counter-balance system;

[0021] FIG. 10 is a side elevation view taken along line 10-10 of FIG. 9;

[0022] FIG. 11 is a rear perspective view of an exemplary embodiment of a food preparation table equipped with a motor driven cover;

[0023] FIG. 12 is an enlarged section side elevation view of another exemplary embodiment of a segmented cover; and

[0024] FIG. 13 is an enlarged section side elevation view of a further exemplary embodiment of a segmented cover; and

Detailed Description of the Invention

[0025] The food preparation table of the invention will be described in more detail with reference to the exemplary embodiment of the refrigerated food preparation table depicted in Figures 1-5. It is to be understood that the depicted

embodiment is provided by way of explanation of the invention, not limitation of the invention. For example, the invention described herein may also be used in connection with non-refrigerated food preparation tables.

[0026] Referring now to Figures 1-3 in particular, a food preparation table 10 is depicted which is particularly useful in food service establishments in preparation of sandwiches, pizza, and the like. The food preparation table 10 includes a cabinet 20 comprising a heat insulated housing 22 defining at least one food storage compartment 30. In the exemplary embodiment depicted in Figures 1-3, the cabinet 20 defines an elongated refrigerated compartment 30 and supports one or more doors 32, 34 which open to permit access to food stored in the respective left and right ends of the interior of the refrigerated compartment 30. One or all of the doors may be omitted and a set of conventional slide-out drawers installed with the refrigerated compartment 30 with the corresponding drawer fronts replacing the door. If desired, a partition wall may be provided in association with the cabinet 20 to divide the refrigerated compartment into separate sections.

[0027] The heat insulated housing 22 includes an inner lining 24 which defines the interior food storage compartment 30 and an outer shell 26 which defines the front, side, back and floor walls of the cabinet 20. The inner lining 24 and the outer shell 26 are disposed in spaced relationship. The interior space therebetween may be filled with a heat insulating material. The inner lining 24 and the outer shell 26 are typically fabricated of a sheet metal, such as for example stainless steel, coated or painted aluminum, or other suitable metal, but may, if desired, be fabricated of a suitable plastic material. Additionally, the inner lining 24 and the outer shell 26 may be fabricated of the same material or of different materials, as desired.

[0028] A food preparation surface 40 is provided atop the cabinet 20 and extends generally along the length of the front side of the cabinet. The food preparation surface 40 may be disposed generally horizontally at a height that is convenient for the person who prepares the food on the food preparation surface. The food preparation surface 40 may be an exterior top surface of the cabinet per se or a top surface of a separate countertop carried on top of the cabinet. The top

surface of the countertop, which may be formed of wood, plastic or other suitable cutting board material, provides the food preparation surface 40.

[0029] As illustrated in Figures 1-3, the food preparation surface 40 does not extend rearward across the full depth of the open top of the cabinet 20. Rather, the food preparation table stops well short of the rear wall 28 of the cabinet 20 whereby an open-top plenum 35 is provided. The plenum 35 opens to the interior food storage compartment 30 and extends along at least a portion of the length of the food storage compartment 30 and may, if desired, extend the entire length of the interior food storage compartment 30. The opening 35 is sized to receive a plurality of condiment pans 36 disposed in lateral relationship along the length of the opening 35. A pair of opposing support rails 39 is provided, one extending along the rear wall 28 of the cabinet 20 and the other along the back side of the countertop 40 for supporting the condiment pans 36 in a conventional manner. Typically, each condiment pan 36 defines a bowl-like depression adapted to receive food stuffs therein and includes a peripheral flange 37 which rests on the support rails 39 when the condiment pans are positioned into the opening 35.

[0030] The food preparation table 10 includes a refrigeration unit for cooling the air within the refrigerated food storage compartment 30. The refrigeration unit includes a compressor 50, condenser 52 and evaporator 56 disposed serially in a closed-loop refrigerant circuit as in conventional practice. The compressor 50, the condenser 52 and an associated condenser fan 54 are disposed exteriorly of the refrigerated food storage compartment 30. The condenser 52 may be a finned tube coil heat exchanger or a bare tube coil heat exchanger, as desired. The evaporator 56 may be a finned tube coil heat exchanger as in conventional practice. The evaporator 56 and one or more associated evaporator fans 58 are disposed within the refrigerated compartment 30 to facilitate circulation of the air within the refrigerated compartment 30. In the depicted exemplary embodiment of the food preparation table 10, the evaporator 56 and its associated evaporator fan(s) 58 are disposed atop a shelf portion 28 of the housing 22 of the cabinet 20 extending along the back of the interior of the cabinet 20, while the compressor 50, condenser 52 and condenser fan 54 are disposed exteriorly of the cabinet 20 in the recess 55 provided beneath the shelf portion 28 of the housing 22 and extending along the rear of the cabinet 20.

[0031] As in conventional practice, the refrigeration unit is charged with a refrigerant, such as for example R-22, R-134a, R-410A, or other compressible refrigerant, which is compressed in the compressor 50 and circulated via the refrigerant circuit through the condenser 52 and thence the evaporator 56 and back to the compressor 50. The hot, high pressure refrigerant vapor discharged from the compressor 50 is cooled and condensed to a high pressure refrigerant liquid as it passes through the condenser 52 in heat exchange relationship with ambient air passed through the condenser 52 by the condenser fan 54. As the high pressure refrigerant liquid passes on through the refrigerant circuit to the evaporator 54, it traverses an expansion device (not shown), such as for example a capillary tube, a fixed orifice or an expansion valve, wherein the refrigerant liquid is expanded to a lower pressure refrigerant liquid or liquid/vapor mix. The refrigerant is evaporated in the evaporator 56 as it passes in heat exchange relationship with air from the refrigerated compartment 30 passed through the evaporator 56 by the evaporator fan(s) 58 thereby cooling the air. The cooled air in turn maintains the temperature of the food stored within the food storage compartment 30 and the food contained within the condiment pans 36 below a desired temperature, typically 40°F (4.4°C).

[0032] The design and structure of the cabinet 20 of the food preparation table 10 as described thus far herein is conventional practice. For a more detailed description of a refrigerated cabinet generally similar to the cabinet 20, further reference may be made to the aforementioned U.S. Patent No. 5,168,719, the entire disclosure of which is incorporated herein by reference.

[0033] The food preparation table 10 of the invention is provided with a sliding cover 60 that covers the open plenum 35 and the condiment pans 36 disposed therein when the food preparation table is not in use, as illustrated in Fig. 4, and slides rearward to uncover the condiment bins 36 when it is desired to access foodstuffs 2 disposed within the condiment bins 36, as illustrated in Fig. 5. The sliding cover 60 comprises an assembly of a plurality of longitudinally elongated segments 62 assembled together in side-by-side relationship to form a segmented cover. In the depicted embodiment, the cover 60 translates along a pair of track members 64, 66 disposed at opposite ends of and mounted on the cabinet 20. Each of the track members may be an L-shaped member subtending a 90 degree angle

defining a generally L-shaped slot 80 which forms the track along which the sliding cover 60 travels. Each L-shaped member has a first leg extending along an upper horizontal surface of the cabinet 20 and second leg extending along a vertical surface of the cabinet 20, for example along the exterior surface of the back wall 28 of the cabinet 20. Additionally, a center rail 68 may be disposed superadjacent the condiment bins 36 to support the central portion of the sliding cover 60 to prevent sagging of the cover when disposed in its closed position over the condiment bins. For example, the center rail 68 may be mounted at its opposite ends on the support rails 39 so as to span the space between the pair of opposed support rails 39. The track members 64, 66 and the center rail 68 may be made of impact resistant materials, such as for example ABS or high impact polystyrene (HIPS) plastics. The track members 64, 66 may be manufactured as a single piece or may be assembled of two or more segments.

[0034] Referring now to Figs. 6-8, in particular, the cover segments 62 have a longitudinally elongated body having a generally rectangular cross-sectional profile. In the exemplary embodiment depicted, each of the cover segments 62 extends longitudinally between a pair of end caps 70. However, it is to be understood that the end caps 70 are optional. The front or leading cover segment 62a, however, may have a tapered nose 63 for improved aesthetics. The front or leading cover segment 62a may also include a handle 61 to facilitate opening and closing of the cover 60. With the exception of cover segment 62a, all other cover segments will typically have the same generally rectangular profile. The cover segments 62 may be formed by extrusion from a heat insulative plastic material, such as ABS or PVC plastics, or other heat insulative materials.

[0035] In the particular exemplary embodiment depicted, each of the cover segments 62, except the front or leading cover segment 62a, includes a longitudinally extending latch member 65 extending forwardly from the lower front wall of the cover segment. Each of the cover segments 62, including the front or leading cover segment 62a, also includes a longitudinally extending slot 69 which is adapted to receive in coupling relationship the latch member 65 of another cover segment. In the depicted exemplary embodiment, the latch member 65 includes a tab 67 extending generally perpendicularly upwardly from an upper surface of the

latch member 65. When the cover segments 62 are assembled together to form the cover 60, the latch member 65 of one cover segment 62 is inserted into the mating slot 69 of the next forwardly disposed cover segment 62 with the tab 67 of the latch member 65 co-acting with the rear wall of the next forwardly disposed cover segment to retain the latch member in place within the slot thereby coupling the two cover segments together. In this manner, any number of cover segments 62 may be coupled together to form a cover 60 having a desired length.

[0036] It is to be understood, however, that the respective cover segments 62 may be assembled together by other means than the latch/slot arrangement depicted in Figure 6. For example, as depicted in Figure 12, adjoining cover segments 62 may be assembled together by means of mechanical hinges 84, such as by a longitudinally extending, full length pin and barrel hinge or a plurality of spaced, pin and barrel hinges, or by an integral living hinge 86 as depicted in Figure 13, which maybe co-extruded with the cover segments during the manufacturing process. Additionally, the trailing segment 62b, i.e. the last segment in the series of segments 62 assembled to form the cover 60, may differ from the other segments in that the longitudinal slot 69 may be omitted.

[0037] In the particular exemplary embodiment depicted in Fig. 7, the end caps 70 have a planar, generally rectangular body 72 having a pair of first pins 74 protruding outwardly from a back side of the body 72 and a second pin 76 protruding outwardly from a front side of the body 72. Both the first pins 74 and the second pin 76 may be formed integrally with the body 72. The end caps may be formed from the same material as the track members 64, 66 or as the cover segments 62. To assemble an end cap to an end of a cover segment 62, the pins 74 are inserted into mating receptacles 75 associated with the cover segment 62. In the exemplary embodiment depicted in Fig. 8, the mating receptacles 75 comprise receiving cavities formed integrally with the inside surfaces of the front and rear walls of the cover segment 62. However, it is to be understood that the end caps 70 may be otherwise assembled to the ends of the cover segments 62, for example by mechanical devises such as screws or the like, or by adhesive bonding with glue, epoxy or the like, or other attachment techniques.

[0038] The cover segments 62 forming the cover 60 extend longitudinally between the longitudinally spaced track members 64, 66 so as to be slidably translatable along the track defined by the track members 64, 66. In the particular exemplary embodiment depicted in the drawing, to assemble the cover 60 to the track members 64, 66, the second pins 76 of the end caps 70 mounted to the opposite longitudinal ends of the respective cover members 62 are simply inserted into the respective slot-like tracks 80 defined by the track members 64, 66. It is to be understood, however, that the assembly of the cover 60 to the track members is not limited to this particular pin/slot arrangement. For example, the track members 64, 66 may define travel guides adapted to receive and capture the ends of the cover segments 62 per se without use of end caps or the afore-described pin/slot arrangement.

[0039] In the closed position, as illustrated in Figure 5a, the cover 60 is positioned full forwardly in the track members 64, 66 so as to fully cover the condiment bins 36. In a refrigerated food preparation table, when in the closed position, the cover provides a significant insulating barrier to heat transfer from the ambient atmosphere exteriorly of the cabinet 20 into the refrigerated compartment 30 through the plenum 35. In a non-refrigerated food preparation table, when in the closed position, the cover provides a barrier over the condiment bins that precludes insects or foreign material from contaminating the foodstuffs therein. When it is desired to access the food within the condiment bins 36 to serve pizza, sandwiches, submarines, salads or other deli items, the cover 60 is merely slid rearward to partially uncover or fully uncover the condiment bins 36, as desired. Because of the generally L-shaped configuration of the respective slot-like tracks 80 defined by the track members 64, 66, as the respective second pins 76 protruding outwardly from the end cap 70 of the cover segments 62 follow along the slot-like tracks, the segmented cover 60 turns downwardly along the exterior of the rear wall of the cabinet 20. Thus, the cover 60 is stowed out of the way when slid rearward to expose the condiment bins 36 and does not interfere with the user of the food preparation table 10 or with any overhead shelves or other overhead structure. However, the cover 60 remains readily accessible and the user need simply to grasp

the handle 61 and pull the cover 60 forward to cover the condiment bins 36 whenever desired.

[0040] Referring now to Figs. 9 and 10, in an embodiment of the food preparation table 10, a counter balance system 90 may be provided to counter the weight of the cover 60 when the user of the food preparation table pulls the cover 60 forward over the condiment bins 36. In the depicted embodiment, the counter balance system 90 includes a pusher 92 having a body suspended in a guide member 95 on a tension spring 93 and a push bar 94 extending outwardly from the body of the pusher 92. The guide member 95 is disposed vertically on the back of the cabinet 20. When the cover 60 moves downwardly along the back of the cabinet 20, the trailing segment 62b of the cover eventually contacts the push bar 94 of the pusher 92 and translates the pusher downwardly within the guide member stretching the tension spring 93. When the user pulls the cover 60 forwardly to again cover the condiment bins 36, the spring 93 contracts thereby making it less strenuous for the user to pull the cover over the condiment bins 36. It is also to be understood that the counter balance system could be modified to employ a compression spring rather than a tension spring.

[0041] Referring now to Fig. 11, if desired, a drive motor 96 and a drive mechanism 98 may be provided in operative association with the segmented cover 60 to power the movement of the segmented cover 60 between its first and second position and any location therebetween. Additionally, an associated power on/off switch 99 operatively coupled to the drive motor 96 and a power supply (not shown) may be provided for selectively activating and deactivating the drive motor. The type of drive motor and drive mechanism selected for a particular application is a matter of design choice within the discretion of the skilled practitioner.

[0042] While the present invention has been particularly shown and described with reference to the particular exemplary embodiment as illustrated in the drawing, it will be understood by one skilled in the art that various modifications or changes, some of which have been discussed herein, may be effected therein and equivalent employed without departing from the spirit and scope of the invention.

We Claim:

1. A food preparation apparatus for use in preparing selected foodstuffs into a prepared food product, the apparatus comprising:

a cabinet defining a food storage compartment, said cabinet including a food preparation surface and an open top plenum located adjacent the food preparation surface, said plenum opening to the food storage compartment; and

a cover slidably translatable between a first position whereat said cover extends across said open top plenum and a second position whereat said open top plenum is uncovered and said cover is stowed.

2. A food preparation apparatus as recited in claim 1 wherein said cover may be selectively positioned at at least one location intermediate the first position and the second position.

3. A food preparation table as recited in claim 1 further comprising a first track member and a second track member mounted to said cabinet in longitudinally spaced relationship, said cover slidably mounted between said first and second tracks and selectively translatible within said tracks.

4. A food preparation apparatus as recited in claim 3 wherein said first track member defines a first travel guide and is mounted to a first end of said cabinet and said second track member defines a second travel guide and is mounted to a second end of said cabinet longitudinally opposite the first end of said cabinet.

5. A food preparation apparatus as recited in claim 4 wherein said first track member defines a first travel guide for receiving a first longitudinal end of said cover and said second track member defines a second travel guide for receiving a second longitudinal end of said cover.

6. A food preparation apparatus as recited in claim 3 wherein said first track member comprises a generally L-shaped track member having a first leg extending along an upper horizontal surface of said cabinet and a second leg extending along a vertical surface of said cabinet, and said second track member comprises a generally L-shaped member track having a first leg extending along said upper horizontal surface of said cabinet and a second leg extending along said vertical surface of said cabinet.

7. A food preparation apparatus as recited in claim 6 wherein said vertical surface of said cabinet is a back surface of said cabinet.

8. A food preparation apparatus as recited in claim 1 wherein said cover comprises a plurality of longitudinally extending cover segments assembled together in side-by-side relationship to form a segmented cover.

9. A food preparation apparatus as recited in claim 8 wherein a forward most cover segment of said segmented cover includes a handle.

10. A food preparation apparatus as recited in claim 8 wherein a first cover segment is assembled to a second cover segment by means of a longitudinally extending latch member extending outwardly from a longitudinal edge of the first cover segment into a longitudinally extending slot formed in a wall of the second cover segment.

11. A food preparation apparatus as recited in claim 8 wherein adjoining cover segments of said cover are assembled together by a mechanical hinge.

12. A food preparation apparatus as recited in claim 8 wherein adjoining cover segments of said cover are assembled together by a living hinge.

13. A food preparation apparatus as recited in claim 8 wherein each of said cover segments includes a first end cap mounted to a first longitudinal end of said cover segment and a second end cap mounted to a second longitudinal end of said cover segment, said first end cap having a pin protruding outwardly therefrom, said second end cap having a pin protruding outwardly therefrom.

14. A food preparation apparatus as recited in claim 13 further comprising a first track member mounted to a first end of said cabinet and defines a first travel slot for receiving the pin protruding outwardly from said first end cap of said cover segment and a second track member mounted to a second end of said cabinet and defines a second travel slot for receiving the pin protruding outwardly from said second end cap of said cover segment.

15. A food preparation apparatus as recited in claim 14 wherein said first track member comprises a generally L-shaped track member having a first leg extending along an upper horizontal surface of said cabinet and a second leg extending along a vertical surface of said cabinet, and said second track member comprises a generally L-shaped member track having a first leg extending along said upper horizontal surface of said cabinet and a second leg extending along said vertical surface of said cabinet.

16. A food preparation apparatus as recited in claim 15 wherein said vertical surface of said cabinet is a back surface of said cabinet.

17. A food preparation apparatus as recited in claim 1 further comprising a drive motor operatively associated with said cover for driving the movement of said cover.

18. A food preparation apparatus as recited in claim 1 further comprising a cover counter balance system.

19. A food preparation apparatus as recited in claim 1 further comprising a refrigeration system operatively associated with said cabinet for refrigerating the food storage compartment defined by said cabinet.

20. A food preparation apparatus for use in preparing selected foodstuffs into a prepared food product, the apparatus comprising:

a cabinet defining a refrigerated food storage compartment, said cabinet including a food preparation surface disposed atop the food storage compartment and an open top plenum located adjacent the food preparation surface, said plenum opening to the food storage compartment; and

a cover slidably translatable between a first position whereat said cover extends across said open top plenum and a second position whereat said open top plenum is uncovered and said cover is stowed, said cover having a plurality of longitudinally extending cover segments assembled together in side-by-side relationship to form a segmented cover.

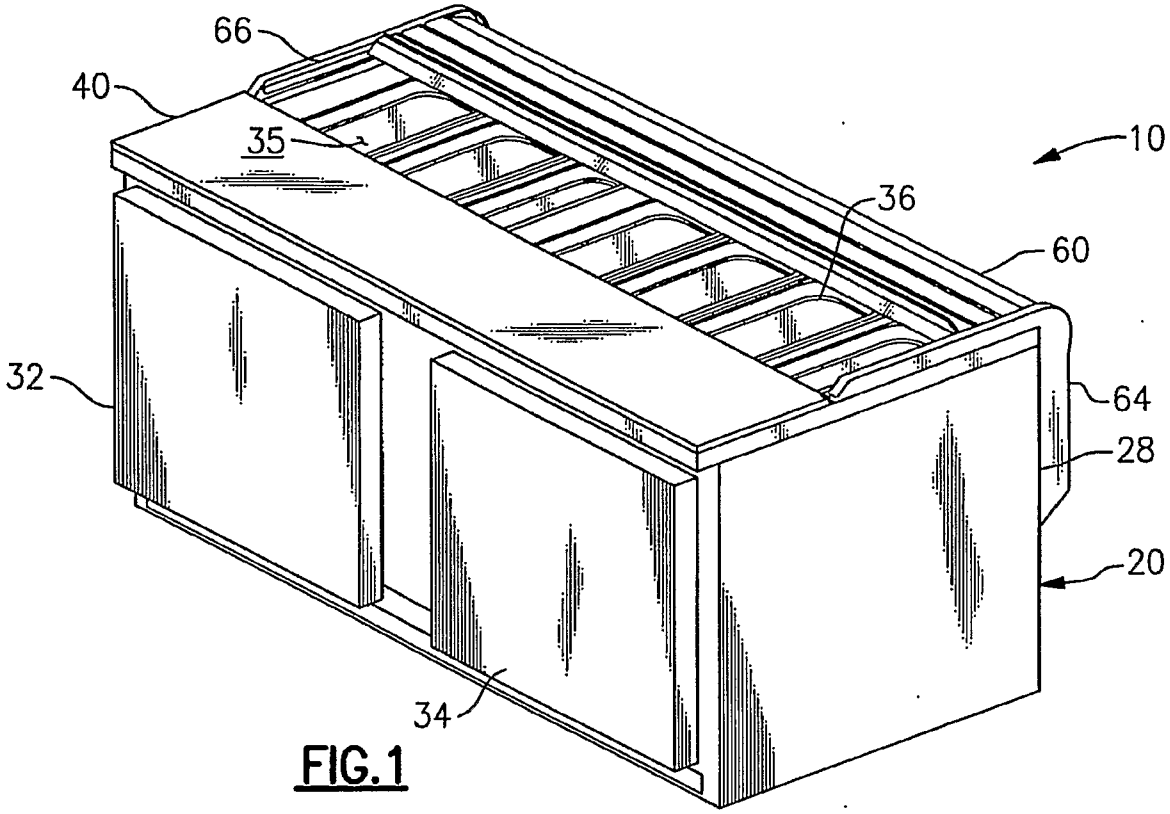

FIG.1

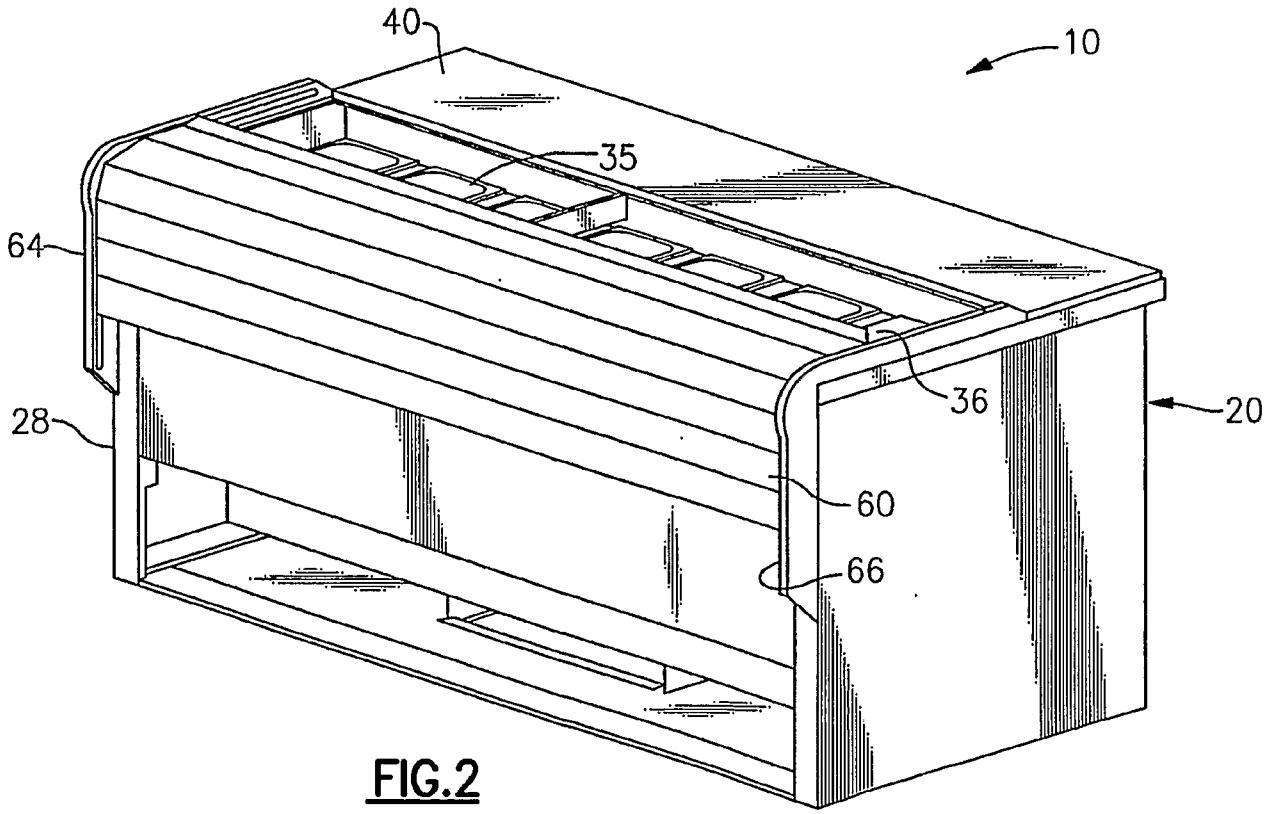

FIG.2

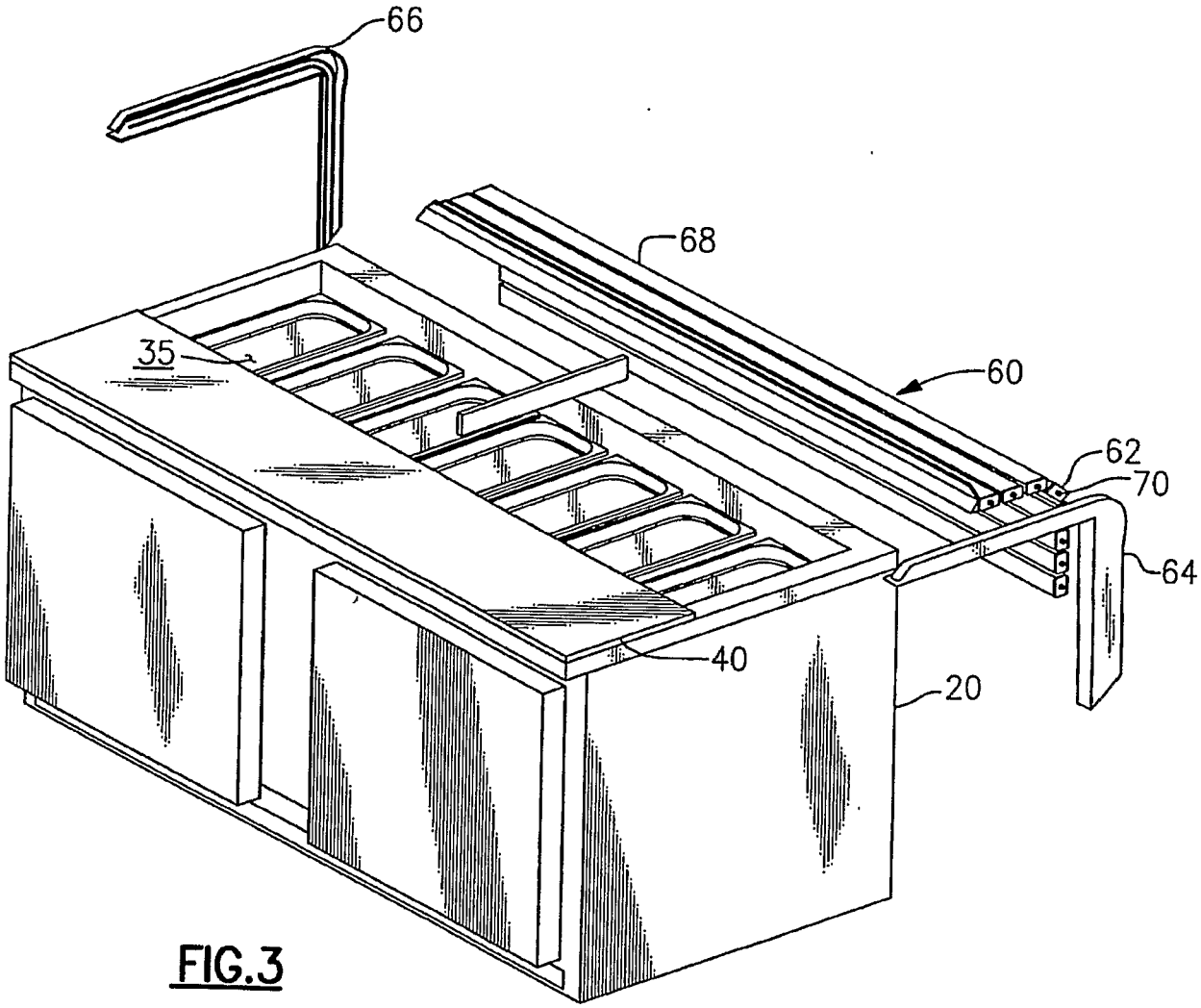

FIG.3

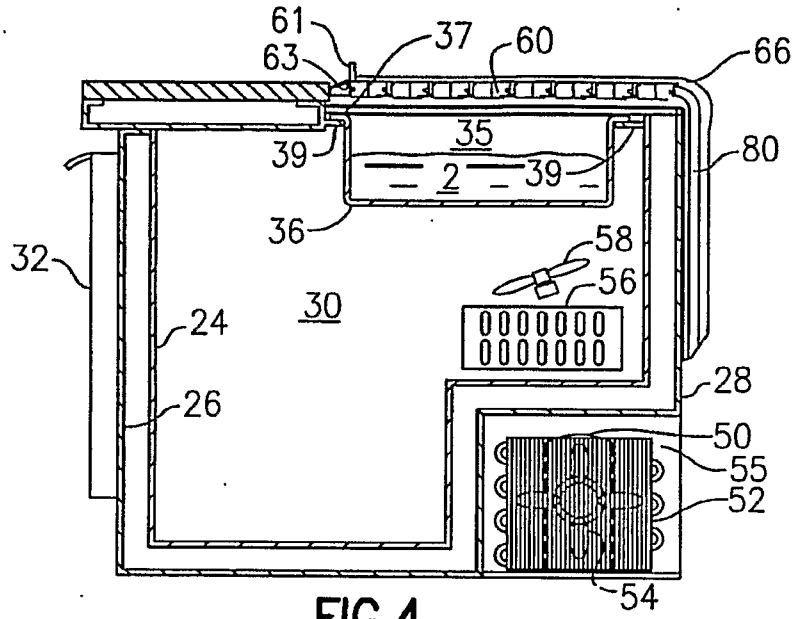
61
63
37
60
66
35
39
2
39
80
36
58
56
32
30
24
26
28
50
55
52
54

FIG.4

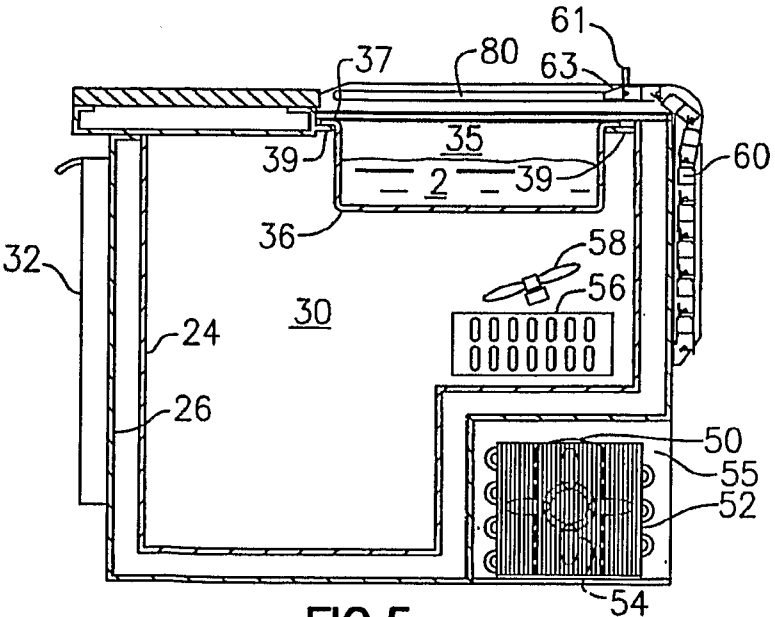
61
37
80
63
35
39
2
39
60
36
58
56
32
30
24
26
50
55
52
54

FIG.5

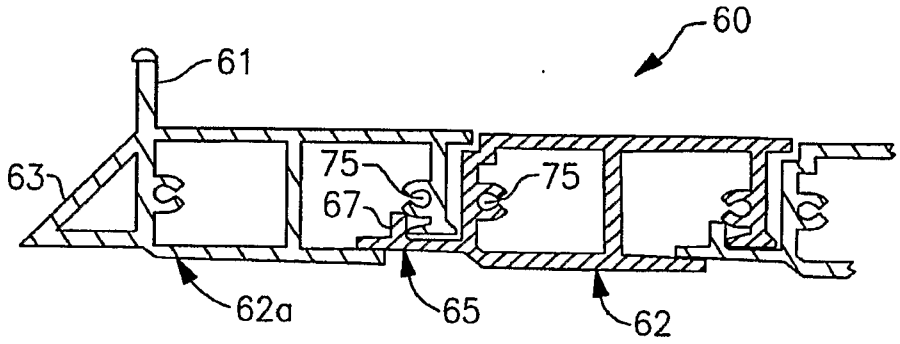

FIG.6

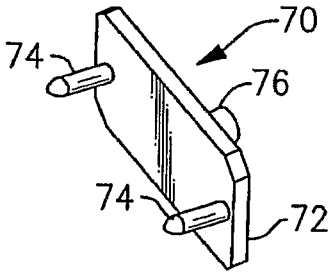

FIG.7

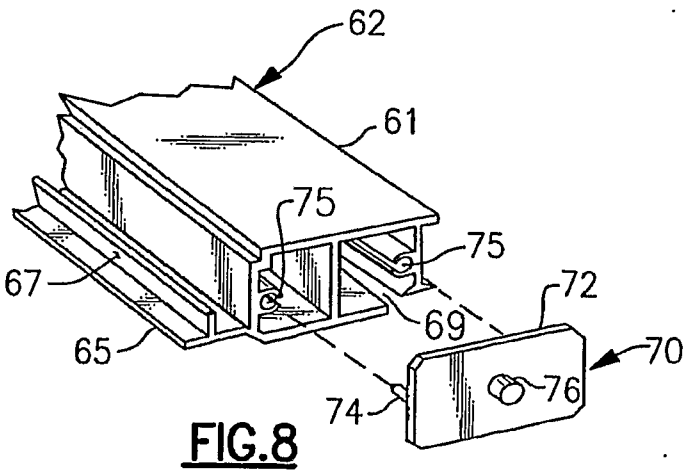

FIG.8

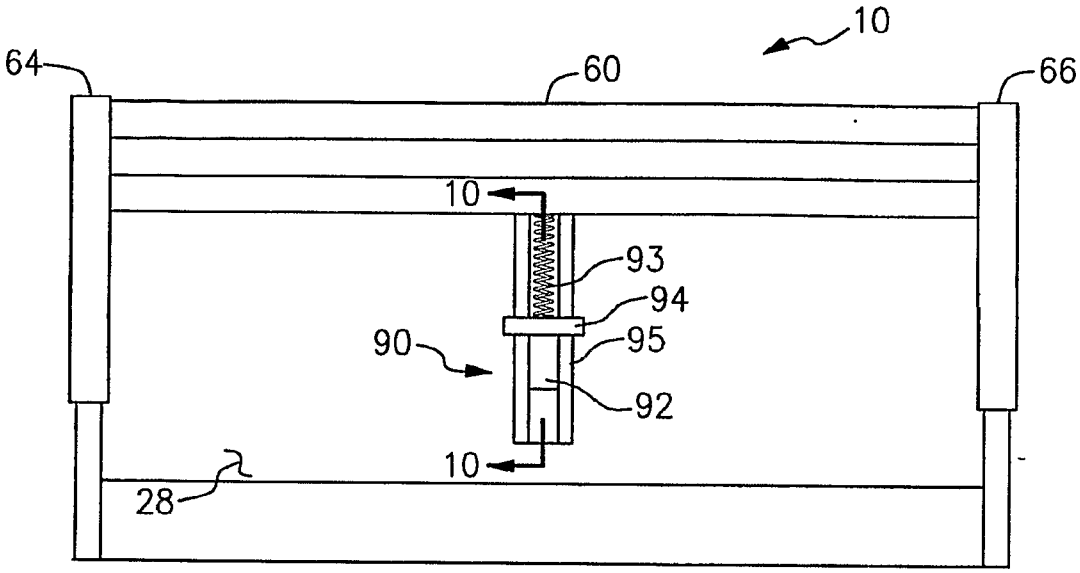

FIG.9

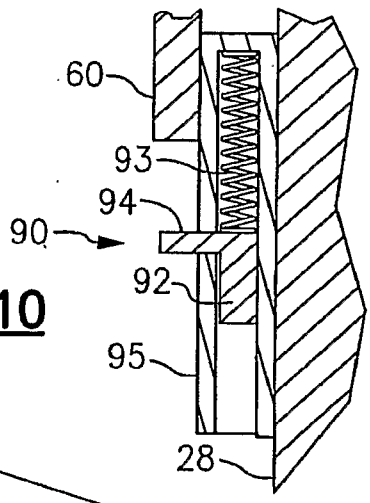

FIG.10

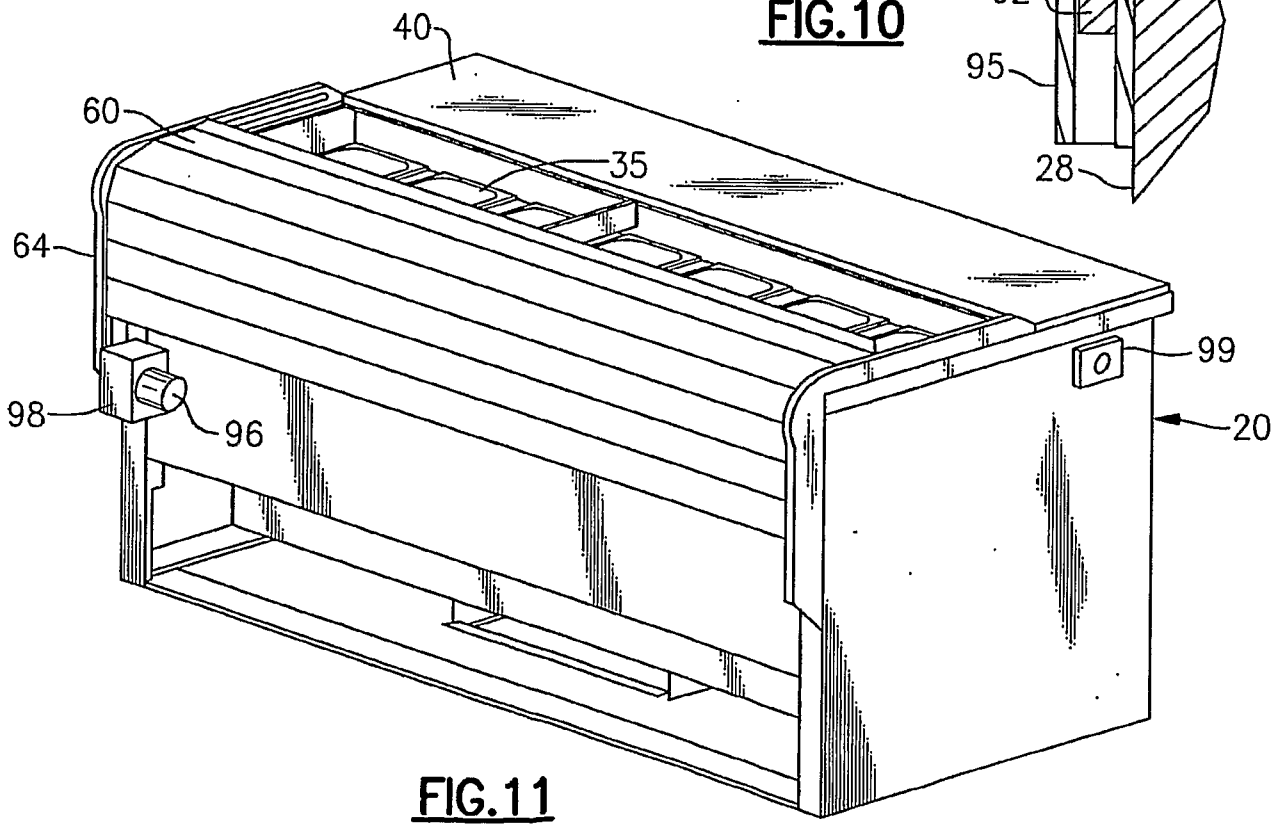

FIG.11

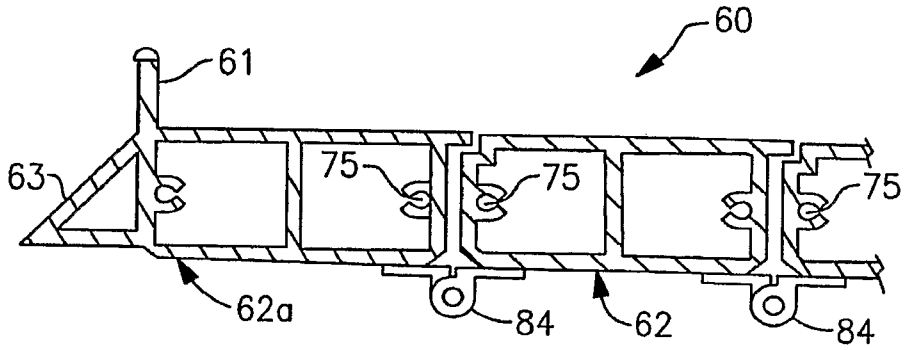

FIG.12

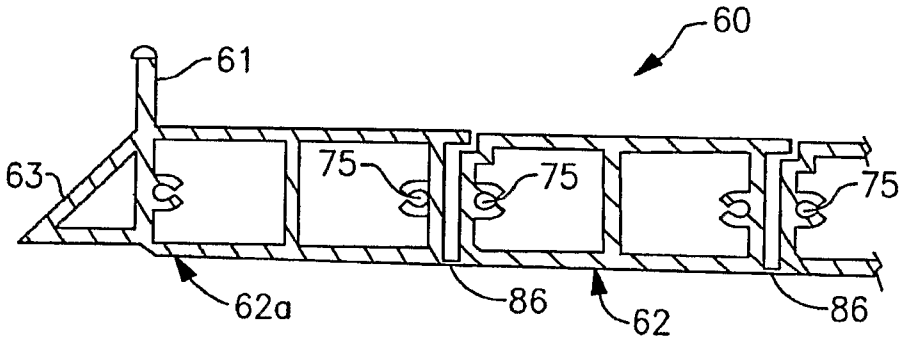

FIG.13

INTERNATIONAL SEARCH REPORT

International application No.
PCT/US07/06173

A. CLASSIFICATION OF SUBJECT MATTER
IPC: **A47F 3/04**(2006.01);**F25D 23/12**(2006.01)

USPC: 62/258;312/116,297
According to International Patent Classification (IPC) or to both national classification and IPC

B. FIELDS SEARCHED

Minimum documentation searched (classification system followed by classification symbols)
U.S. : 62/258, 255-256; 312/116, 297, 405, 140.1-140.4, 139.2, 137

Documentation searched other than minimum documentation to the extent that such documents are included in the fields searched

Electronic data base consulted during the international search (name of data base and, where practicable, search terms used)
EAST

C. DOCUMENTS CONSIDERED TO BE RELEVANT

Category *	Citation of document, with indication, where appropriate, of the relevant passages	Relevant to claim No.
Y --- A	US 5,182,924 A (TRULASKE, SR.) 02 February 1993 (02.02.1993), column 2, line 61 to column 3, line 5.	1-12 and 17-20 --- 13-16
Y --- A	US 3,317,259 A (OTIS) 02 May 1967 (02.05.1967), column 2, lines 33-63.	1-12 and 17-20 --- 13-16
Y	US 5,121,974 A (MONSON) 16 June 1992 (16.06.1992), column 3, line 66 to column 4, line 23.	6 and 7
Y	US 5,193,726 A (HUMPHREY) 16 March 1993 (16.03.1993), column 5, lines 13-29.	8-12
A	US 4,930,321 A (TAKAHASHI) 05 June 1990 (05.06.1990), see the entire document.	1-20

☒ Further documents are listed in the continuation of Box C. ☐ See patent family annex.

* Special categories of cited documents:

"A" document defining the general state of the art which is not considered to be of particular relevance

"E" earlier application or patent published on or after the international filing date

"L" document which may throw doubts on priority claim(s) or which is cited to establish the publication date of another citation or other special reason (as specified)

"O" document referring to an oral disclosure, use, exhibition or other means

"P" document published prior to the international filing date but later than the priority date claimed

"T" later document published after the international filing date or priority date and not in conflict with the application but cited to understand the principle or theory underlying the invention

"X" document of particular relevance; the claimed invention cannot be considered novel or cannot be considered to involve an inventive step when the document is taken alone

"Y" document of particular relevance; the claimed invention cannot be considered to involve an inventive step when the document is combined with one or more other such documents, such combination being obvious to a person skilled in the art

"&" document member of the same patent family

Date of the actual completion of the international search
20 May 2008 (20.05.2008)

Date of mailing of the international search report
11 JUL 2008

Name and mailing address of the ISA/US
Mail Stop PCT, Attn: ISA/US
Commissioner for Patents
P.O. Box 1450
Alexandria, Virginia 22313-1450
Facsimile No. (571) 273-3201

Authorized officer
Cheryl J. Tyler

Telephone No. (571) 272-2975

Form PCT/ISA/210 (second sheet) (April 2007)

INTERNATIONAL SEARCH REPORT

International application No.
PCT/US07/06173

C (Continuation). DOCUMENTS CONSIDERED TO BE RELEVANT

Category *	Citation of document, with indication, where appropriate, of the relevant passages	Relevant to claim No.
A	US 4,424,685 A (IBRAHIM) 10 June 1984 (10.06.1984), see the entire document.	1-20
A	UA 5,171,076 A (EMING) 15 December 1992 (15.12.1992), see the entire document.	1-20
A	US 4,400,046 A (KARASHIMA) 23 August 1983 (23.08.1983), see the entire document.	1-20
A	US 3,241,899 A (DONKER) 22 March 1966 (22.03.1966), see the entire document.	1-20
A	US 6,109,051 A (MAJORDY) 29 August 2000 (29.08.2000), see the entire document.	1-20
A	US 2,886,395 A (CAHN) 12 May 1959 (12.05.1959), see the entire document.	1-20
A	US 2,786,337 A (SPRING) 26 March 1957 (26.03.1957), see the entire document.	1-20