Nov. 4, 1941. T. J. BEREGH 2,261,212

SPRAYING DEVICE

Filed Dec. 16, 1938

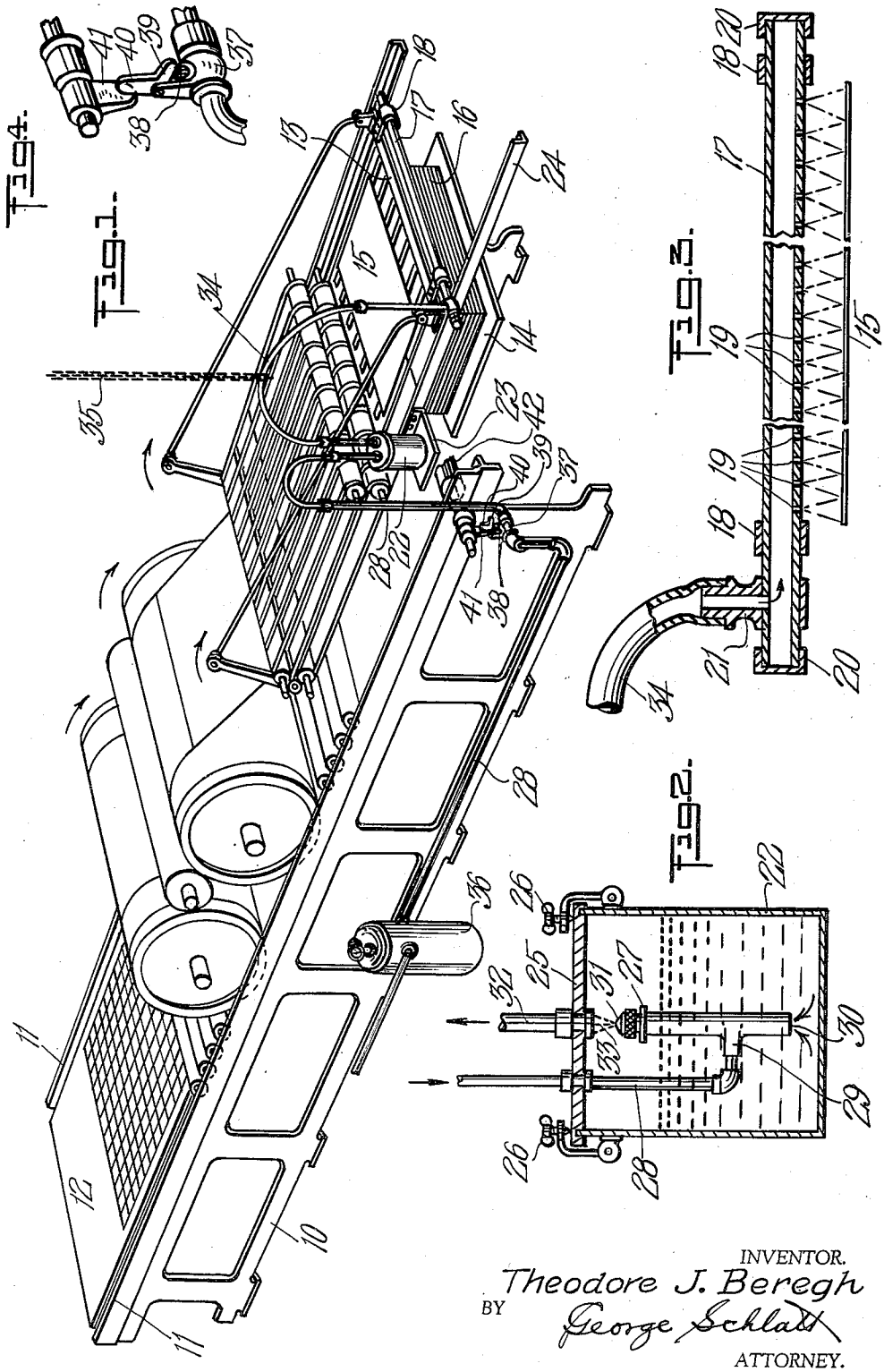

Fig. 4.

Fig. 1.

Fig. 3.

Fig. 2.

INVENTOR.
Theodore J. Beregh
BY George Schlatt
ATTORNEY.

Patented Nov. 4, 1941

2,261,212

UNITED STATES PATENT OFFICE

2,261,212

SPRAYING DEVICE

Theodore J. Beregh, Patchogue, N. Y.

Application December 16, 1938, Serial No. 246,218

2 Claims. (Cl. 101—416)

This invention relates to an improvement in spraying devices, and more particularly to such as are employed in connection with printing presses for spraying freshly printed sheets to prevent offsetting.

Objects

Among the principal objects which the present invention has in view are: to provide improved means for spraying freshly printed sheets; to obtain coordination of the spraying means with the delivery of the freshly printed sheets; to avoid repeated spraying of a sheet when another sheet is not fed through the press; to utilize air pressure from a compressor to distribute the spraying means to a sheet; to provide a structure adaptable to various sizes and types of printing presses of present day manufacture; to provide a member enclosing a means for distributing antioffset material to a freshly printed sheet without interrupted delivery of a succeeding sheet; to provide means for an even distribution of anti-offset material to a freshly printed sheet; to be enabled to use one or more syphon atomizers within a container having anti-offset material and for discharging same therefrom under air pressure to be distributed to a freshly printed sheet; to closely associate the distributing means with the sheet being sprayed; to secure simplicity of construction and operation; and to obtain other advantages and results as may be brought out in the following description.

Drawing

Figure 1 is a perspective view of the invention applied to a conventional printing press wherein the type bed reciprocates under rollers which feed the paper;

Figure 2 is a sectional view of the tank containing the supply of anti-offset material and the means for receiving air pressure and for transmitting the anti-offset in a spray condition to the press;

Figure 3 is a longitudinal sectional view of an elongated pipe having a plurality of openings through which is discharged the spray of anti-offset material to a freshly printed sheet under influence of the means as shown in Figure 2; and

Figure 4 is an enlarged fragmentary view of the tripping mechanism.

Description

In the specific embodiment of the invention illustrated in said drawing, the reference numeral 10 indicates the stationary frame-work of the printing press. This framework includes appropriate tracks or runways 11 for a reciprocating type bed plate 12. It will be understood that paper is fed to the press as usual and that after imprint from the type is made upon the paper, the paper is discharged by a delivery carrier 13 upon a receiving table or rack 14. One sheet of paper 15 is shown in Figure 1 ready to be dropped upon a stack 16 of previously printed sheets. When the paper is in this position, it is desired to spray the top sheet on the stack 16 thereon with a suitable liquid, known in the trade as an anti-offset, preferably by a syphon atomizer, before the sheet 15 is dropped. It may be said at this time, the present invention is an improvement over application Serial Number 103,078, filed September 29, 1936.

According to the present invention, spraying of the printed sheet is effected after the sheet is in a position of rest on top of the stack and is effected with the spray-head in relatively close proximity to the sheet. The specific showing may therefore be described as comprising a spray-head 17 mounted upon and traveling with the carriage 13. Furthermore, the spray-head here shown is of tubular formation extending crosswise of the carriage and substantially as long as the carriage is wide. Brackets 18, 18 near the ends of the spray-head in turn bolted to the forward rail of the carriage mount the spray-head in fixed relation to the carriage normal to the path of movement of the carriage. The underside of the spray-head is perforated, as at 19, for providing a plurality of minute perforations across the spray-head from bracket to bracket to take in the entire width of the paper when spraying. The fact that this spray-head is substantially at the level of the carriage results in its passing over the paper in close proximity thereto as the carriage reciprocates. The spray-head is furthermore shown as having its tubular body portion closed at both ends by caps 20, 20 applied thereon as by screw threads or otherwise. Entry of the fluid to the spray-head is by way of a suitable nipple 21 or other suitable means here shown swaged or otherwise applied near one end thereof.

In order to supply the anti-offset fluid to discharge from the spray-head, I have shown a container 22 suitably mounted, as upon a fixed shelf 23 on a fixed part of the press, which in the drawing is indicated to be a fixed carriage-rail 24. The showing is merely illustrative of suitable mounting for container 22 in proximity

to the carriage, and it will accordingly be obvious that the container may be supported elsewhere and otherwise if so desired. Referring particularly to Figure 2, it will be noted that the container provides a readily removable top or lid 25 normally held in place by clamps 26 so that the container will be sealed in use and may withstand air pressure applied to the interior thereof. Within the container is mounted a syphon atomizer 27. The construction of this atomizer is such that air under pressure coming through inlet tube or pipe 28 enters through an inlet neck 29 of the atomizer through a Venturi passage (not shown) and will pass upwardly through the atomizer body portion sucking with it fluid from the container by virtue of the lower end 30 of the atomizer body portion being open to the fluid and adjacent the bottom of the container. The air and fluid sucked up by it discharge at the top of the atomizer through a suitable nozzle 31. The said atomizer is aligned with a discharge pipe 32 opening through the said lid 25, and the atomized stream 33 from the nozzle, or a considerable part thereof, consequently passes upwardly through said discharge pipe 32. This discharge pipe preferably includes an exterior flexible portion 34 in turn connected with nipple 21 and spray-head. Any suitable means such as chain 35 indicated in Figure 1 may be employed for supporting this flexible portion 34 of the discharge tube. It will be appreciated that since the container 22 is stationary and the discharge head is reciprocating with the carriage that there will be a constant flexing of the flexible portion 34 of the tubing during operation of the press.

Air pressure is supplied to inlet tube 28 from any suitable source, such as air pressure tank 36. Air pressure is maintained in this tank by any suitable pump or other means (not shown). However, it is not desired to maintain a constant pressure within the container 22, but rather to supply the pressure intermittently and in timed relation with respect to the movement of the carriage so that spraying of the anti-offset fluid will occur only at the time desired during passage of the spray-head over the stacked sheets 16. Accordingly, a suitable trip valve 37 is provided in the piping 28 between the said air tank 26 and container 22. By way of illustration the said trip valve is shown as providing a depressible stem 38 depression of which will open the valve but which normally returns to its uppermost position under spring pressure or otherwise so the valve is normally closed and will be opened only for such interval as said stem may be depressed. Also by way of illustration, I have shown a horizontal arm 39 of a bell crank lever overlying the stem and adapted to be depressed when a vertically projecting arm 40 of said bell crank lever is pushed forwardly. The press includes as part of its control mechanism, a lever 41 which swings back and forth to obtain an intermittent rotation of an ink roll 42, and I have chosen to operate the said valve 37 from this lever 41 of the press. As said lever swings forward it swings the bell crank lever and depresses stem 38 thereby admitting air pressure to the atomizer 27. Sufficient air pressure is admitted to obtain a spray of the fluid upwardly through discharge pipe 32 into the spray-head for a period of time sufficient for the carriage to move through one stroke of its movement, and preferably through the retracting stroke that is to say, while the carriage passes from right to left as viewed in Figure 1, but will not spray while the carriage is moving through its other stroke from left to right. This choice of lever 41 as the impelling means from the press, is made by preference because of the fact that when the throw-out mechanism of the press is operated to omit printing a sheet for any purpose, this lever 41 likewise stops swinging. As a result of making this or similar connection to the operating mechanism of the press, there is no duplication of spraying of a sheet resultant from omission of the next subsequent sheet as the carriage reciprocates. I wish it to be understood, however, that other impelling means may be employed for causing the valve to function and the said valve may be caused to function during other periods of the stroke of the carriage than the particular period referred to hereabove. While it is more specifically illustrated that the spraying shall occur during the stroke of the carriage in one direction only, the spraying may be obtained during both strokes of the carriage if so desired. Furthermore, the air pressure may be maintained constant to the atomizer and valve 37 shut off only when the press throw-out is operated or the press stopped. These other modifications are deemed within the scope of the invention and the following claims are to be construed accordingly.

I claim:

1. A spraying device of the character described, for use with a printing press having means for supporting freshly printed papers, means for intermittently spraying anti-offset fluid to the printed paper, said means comprising a trip valve, said trip valve having a depressible stem whereby during depression of the stem the valve will open and the fluid will be sprayed onto the paper, a bell crank lever having vertically and horizontally disposed arms with the horizontal arm overlying the depressible stem and adapted to be depressed when the vertically disposed arm is pushed in a forward direction under influence of the printing press mechanism.

2. A spraying device of the character described, for use with a printing press having means for supporting freshly printed paper, means for intermittently spraying anti-offset fluid to the printed paper, said means comprising a trip valve, said trip valve having a depressible stem whereby during depression of the stem the valve will open and the fluid will be sprayed onto the paper, a bell crank lever pivotally connected to the said valve having vertically and horizontally disposed arms with the horizontal arm overlying the depressible stem and adapted to be depressed when the vertically disposed arm is pushed in a forward direction under influence of the printing press mechanism, and said mechanism providing a lever adapted to swing against the vertically disposed arm of the bell crank lever for making contact of the horizontal arm with the depressible stem thereby opening the valve.

THEODORE J. BEREGH.