(No Model.) 3 Sheets—Sheet 1.

F. W. SMITH, Jr. & S. S. WILLIAMSON.

PUNCH FOR BANK CHECKS.

No. 455,929. Patented July 14, 1891.

Fig. 1.

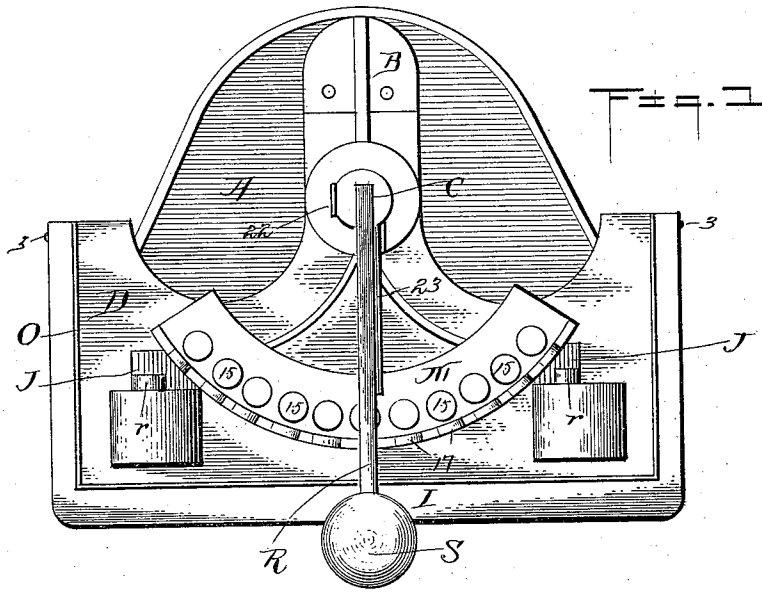

Fig. 2.

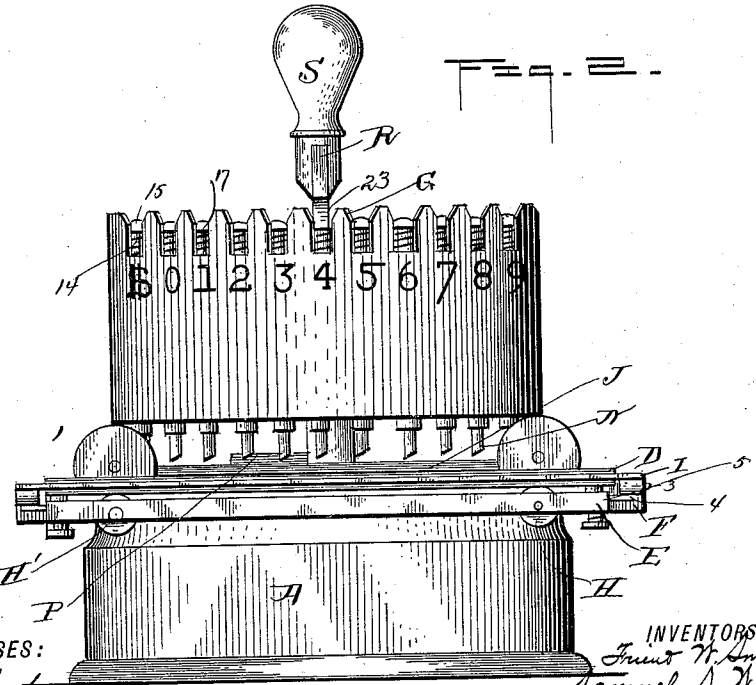

WITNESSES:

A. S. Bishop

R. H. Bishop.

INVENTORS

Frank W. Smith Jr.

Samuel S. Williamson

BY

W. E. Anglebarger

ATTORNEY.

THE NORRIS PETERS CO., PHOTO-LITHO., WASHINGTON, D. C.

(No Model.) 3 Sheets—Sheet 2.

F. W. SMITH, Jr. & S. S. WILLIAMSON.

PUNCH FOR BANK CHECKS.

No. 455,929. Patented July 14, 1891.

Fig. 3.

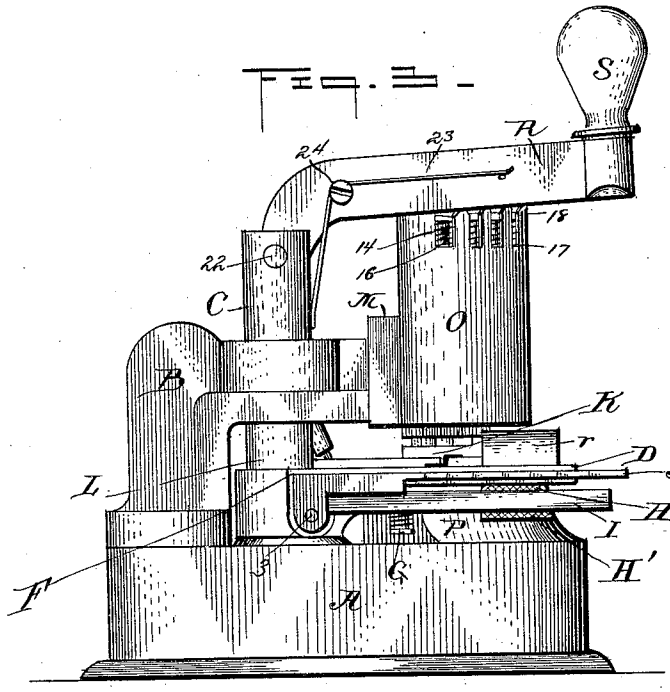

Fig. 4.

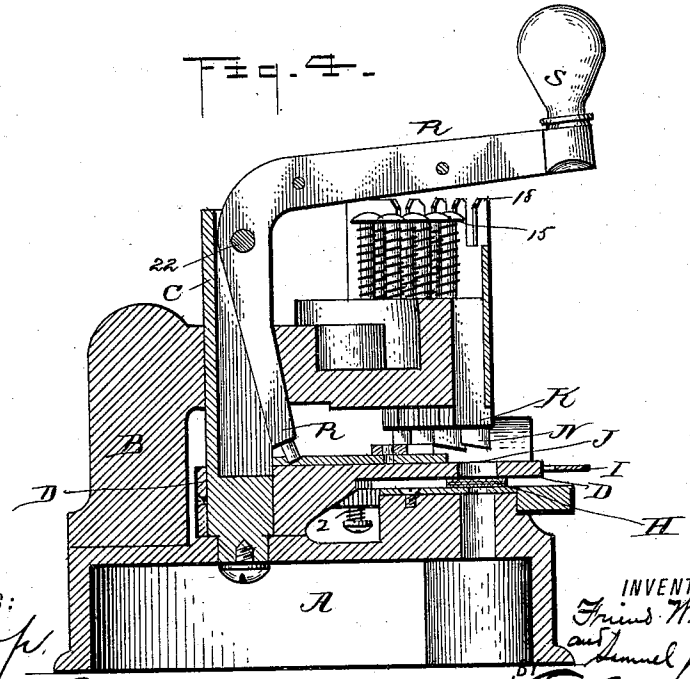

WITNESSES:

Alex Bishop.

R. W. Bishop.

INVENTORS

Frank W. Smith Jr.

and Samuel S. Williamson

by W. E. Anglinbaugh.

ATTORNEY.

THE NORRIS PETERS CO., PHOTO-LITHO., WASHINGTON, D. C.

(No Model.) 3 Sheets—Sheet 3.

F. W. SMITH, Jr. & S. S. WILLIAMSON.

PUNCH FOR BANK CHECKS.

No. 455,929. Patented July 14, 1891.

Fig. 5.

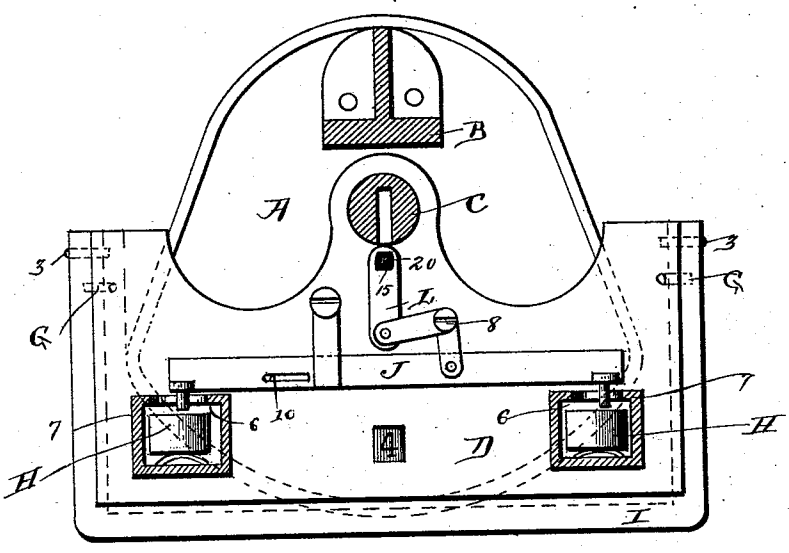

Fig. 6.

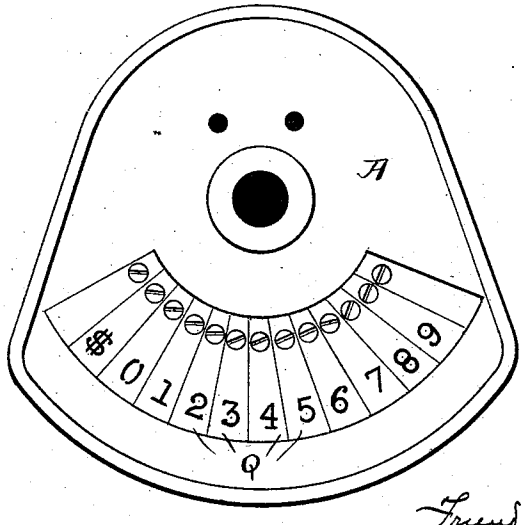

WITNESSES:

A. S. Bishop

R. W. Bishop

INVENTORS:

Fred W. Smith Jr.,

and Samuel S. Williamson

BY

W. E. Aughinbaugh

Their ATTORNEY.

THE NORRIS PETERS CO., PHOTO-LITHO., WASHINGTON, D. C.

UNITED STATES PATENT OFFICE.

FRIEND W. SMITH, JR., AND SAMUEL S. WILLIAMSON, OF BRIDGEPORT, CONNECTICUT, ASSIGNORS TO THE LIGHTNING CHECK PUNCH COMPANY, OF SAME PLACE.

PUNCH FOR BANK-CHECKS.

SPECIFICATION forming part of Letters Patent No. 455,929, dated July 14, 1891.

Original application filed October 2, 1889, Serial No. 325,768. Divided and this application filed August 21, 1890. Serial No. 362,665. (No model.)

To all whom it may concern:

Be it known that we, FRIEND W. SMITH, Jr., and SAMUEL S. WILLIAMSON, citizens of the United States, residing at Bridgeport, in the county of Fairfield and State of Connecticut, have invented certain new and useful Improvements in Punches for Bank-Checks; and we do hereby declare the following to be a full, clear, and exact description of the invention, such as will enable others skilled in the art to which it appertains to make and use the same.

Our invention relates to certain new and useful improvements in check-punches, and is a division of application No. 325,768, filed October 2, 1889.

It has for its object to simplify the construction of check-punches and to greatly facilitate the adaptation of the same in practical use.

With these ends in view our invention consists in the details of construction and combination of elements, such as will be hereinafter fully set forth, and then specifically designated by the claims.

In the accompanying drawings, Figure 1 is a plan of our improvement. Fig. 2 is a front elevation. Fig. 3 is a side elevation. Fig. 4 is a central vertical section, the operation-lever being in elevation. Fig. 5 is a section on line *x x* of Fig. 3. Fig. 6 is a detail plan showing the die-bed.

Similar letters and numerals denote like parts in the several figures.

A is the bed, and B a standard extending upward therefrom and rigidly secured thereto. C is a spindle swiveled within said bed and standard, so as to be capable of a free rotary movement.

D is a plate rigidly secured to the spindle C, so as to swing therewith, and E is a plate pivoted at 3 between ears F, depending from said plate.

G are pins extending from the plate D through the plate and terminating in heads 1, between which latter and the bottom of the plate E are coil-springs 2, whereby the downward movement of said plate E is rendered resilient. The pins G pass loosely through the plate E, and the heads 1 limit the downward movement of the plate E, the springs serving to keep the latter in elevated or normal position.

H H′ are feed-rolls journaled, respectively, in the plate D and said plate E, one above the other. We prefer to use two sets of these rolls, one at each end of said plate, in order to insure a constant and uniform feed movement, as will be clearly understood from the description hereinafter to be given. The rolls H H′ are normally in contact, owing to the action of the springs 2.

I is a lever extending around the plate D and pivoted at 3 to the ears F, and 4 are pins extending laterally from opposite sides of the plate E, upon which rest pins 5, which depend from said lever. The function of this lever is to depress the plate E, so that the rolls H H′ will be separated for the purpose of introducing a check, as will be presently set forth.

6 are ratchet-wheels rigidly secured to the inner sides of roll H.

J is a pawl-carrier resting on the plate D and having at each extremity pawls 7, which project into operative engagement with the ratchet-wheels 6.

K is a bell-crank lever pivoted at 8 to the plate D, the ends of said lever being pivoted, respectively, to the carrier J and to a link L, so that it will be readily understood that the reciprocation of said link in the direction indicated by the arrow will effect a lengthwise reciprocation of the carrier, whereby the pawls 7 will operate to turn the ratchets 6 and thereby revolve the rolls.

9 are bow-springs which bear against the outer sides of the rolls H and serve as frictional detents to prevent the reverse movements of said rolls while the pawls are returned to normal position.

10 is a pin projecting from the plate D through a guide-slot 11 in the carrier, whereby the movement is rendered uniform and steady.

12 is a flexible flat spring secured to the plate D and bearing directly upon the carrier J to further steady the movement of the latter and to permit said carrier to rise and fall with a spring action as the pawls ride over the

ratchet-wheels 6 and drop into position behind succeeding teeth.

The mechanism consisting of the rolls H H′, ratchets 6, pawls 7, carrier J, guided as set forth, bell-crank K, link L, and detents 9 constitute our check-feeding means, and the insertion and step-by-step feed is accomplished as follows: The operator depresses the lever 1, inserts the check between the rolls within the space 13, releases the said lever, thereby causing the rolls to grip the check, and by reciprocating the link L in the direction indicated by the arrow effects the intermittent revolution of said rolls, which latter by their movement feed the check step by step.

We will now proceed to describe the means by which the feed is operated and the punching of the check effected.

M is a head integral with or secured to the standard B and having vertically extending therethrough pins 14, capable of a free up-and-down movement. These pins terminate at their upper ends in heads 15, between which latter and the head M are coil-springs 16, whereby the movements of said spring are rendered resilient and the normal elevated position of the latter insured, the pins extending below the head M, and on their lower ends are secured the punches N.

O is a guide-plate secured to the head M and provided with slots 17 immediately in front of the pins 14. These slots have flared gates 18 at the lower ends of said slots, and upon the plate O are the signs or numbers $, 1, 2, 3, 4, 5, &c., which identify the punches.

P is the die-bed secured upon or cast with the bed A, and having a channel 19, through which the punchings drop from the die within the bed A.

Q are the dies secured on the bed P and adapted to register with the punches.

R is an L-shaped operating-lever, the heel of which terminates in a pin 20, fitting loosely in a socket in the link L. The knee of this lever is pivoted at 22 within the spindle C, and the spring 23, secured to the lever by a pin or screw 24, and bearing at its free end, against the said spindle and lever, respectively, keeps said lever in a normal elevated position. The said lever extends forward above and beyond the guide-plate O, and in cross-diameter said lever is of such dimension as to fit easily within the slots 17. Any suitable knob S is secured to the outer end of this lever. By grasping the knob S the lever R, spindle C, plate D, and parts carried thereby are swung in the arc of a circle, and in operating the punches it is merely necessary to swing the lever R until it is above the particular punch to be operated, when the said lever is depressed, thereby forcing the punch into proper engagement with its corresponding die. When the knob is released, the springs 16 and the spring 23 co-operate to return the lever to its normal position. When the forward end of the operating-lever is depressed, the heel end thereof will be thrown rearward, thereby operating the link L, bell-crank K, and carrier J to return the pawls 7 to normal position, and when said lever is elevated the said pawls will be operated against the ratchets 6 to turn the feed-rolls H H′, as and for the purpose hereinafter set forth.

The most prominent features of our improvement are that the punches and dies are stationary, while the check carrying and feeding mechanisms are shifted in synchronism, and this will be readily understood when it is borne in mind that the lever R and plate D are both secured to the same rock-shaft or spindle C.

Having thus fully described our invention, what we claim herein as new, and desire to secure by Letters Patent of the United States, is—

1. The combination of a swing, a plate rigidly secured thereto, a clamping-plate pivoted on the plate first mentioned and in a position parallel therewith, a spring normally maintaining one of said plates against the other, feed-rollers journaled in each plate, respectively, and a lever for separating at will the two plates, substantially as set forth.

2. The combination of a swing comprising a swiveled spindle and a plate rigid therewith, a clamping-plate pivoted on said swing in a position parallel to the plate first mentioned, feed-rollers journaled in each plate, respectively, and a spring normally maintaining said rollers in operative position, substantially as set forth.

3. In a check-punch, the combination of a swiveled member having secured thereto a check-clamp, a spring normally maintaining the closed position of said clamp, and means for opening said clamp, substantially as set forth.

4. In a check-punch, the combination of a swiveled member, a plate rigidly secured thereto, a clamping-plate pivoted on the first-mentioned plate in a position parallel thereto, a spring normally maintaining one of said plates against the other, and a lever for separating at will the two plates.

In testimony whereof we affix our signatures in presence of two witnesses.

FRIEND W. SMITH, JR.
SAMUEL S. WILLIAMSON.

Witnesses:
J. S. FINCH,
R. C. AMBLER.