(No Model.)

W. F. SAMPSON.

HEEL BURNISHING MACHINE.

No. 456,066. Patented July 14, 1891.

Fig. 1.

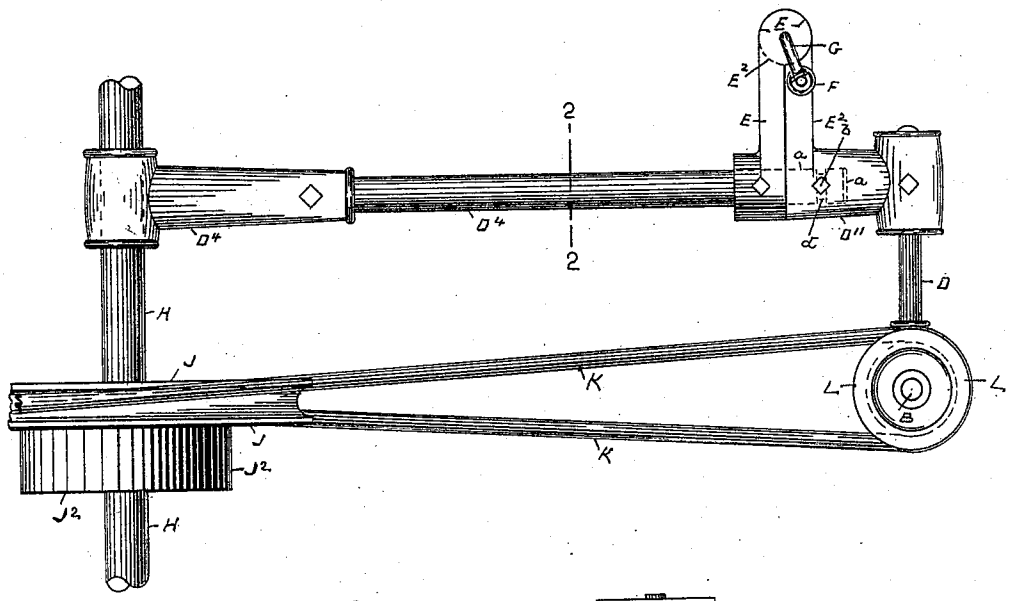

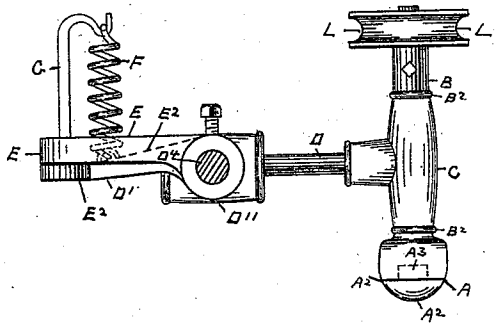

Fig. 2.

WITNESSES:
Geo. H. Graham.
Frances M. Brown.

INVENTOR:
Winslow F. Sampson
by his Attorneys
Brown Bros.

THE NORRIS PETERS CO., PHOTO-LITHO., WASHINGTON, D. C.

UNITED STATES PATENT OFFICE.

WINSLOW F. SAMPSON, OF GOFFSTOWN, ASSIGNOR, BY DIRECT AND MESNE ASSIGNMENTS, TO THE SAMPSON AUTOMATIC HEEL BURNISHING MACHINE COMPANY, OF MANCHESTER, NEW HAMPSHIRE.

HEEL-BURNISHING MACHINE.

SPECIFICATION forming part of Letters Patent No. 456,066, dated July 14, 1891.

Application filed March 24, 1890. Renewed April 20, 1891. Serial No. 389,692. (No model.)

To all whom it may concern:

Be it known that I, WINSLOW F. SAMPSON, a citizen of the United States of America, and a resident of Goffstown, in the county of Hillsborough and State of New Hampshire, have invented certain new and useful Improvements in Heel-Burnishing Machines, of which the following is a full, clear, and exact description.

This invention has for its object to provide novel means for burnishing the heels of boots or shoes; and to accomplish this object my invention involves the combination of devices and the principles of operation hereinafter described and claimed, reference being made to the accompanying drawings, in which—

Figure 1 is a plan view of a support for the bearing of the shaft of the burnisher of this invention. Fig. 2 is a vertical section, line 2 2, Fig. 1, and a side view of the burnisher-shaft and its bearing and the burnisher and its working-face.

In the drawings, A is the burnisher, and A^2 is its imperforate or closed working hemispherical face. The burnisher A at its end opposite its working-face has a cylindrical tang A^3, which is entered into and tightly fits a corresponding-shaped socket of a shaft B, and thus the burnisher is secured to one end and its working-face lies across the axial line of said shaft. The shaft B, as shown, is vertical, and it is free to turn in and is confined by collars B^2 B^2 at its opposite ends against escape from a tubular bearing-block C, which is at one end of a horizontal arm D, that at its opposite end is held on and projects at right angles from the end section D^{11} of a rod in two sections or parts D^4 D^{11}, continuous with each other and butted end to end and there joined by an axial swivel-joint consisting of a cylindrical pin *a* on one section and a corresponding socket in the other. The swivel-pin *a* is entered into and fits the socket therefor, and it is retained while free to turn in said socket by the engagement of a set-screw *b*, screwed through the section D^{11} of the rod D^4 D^{11} and entered into and engaged with the peripheral groove *d* of the swivel-pin *a*.

E E^2 are radially-projecting arms respectively fixed on and at the same side of the rod-sections D^4 D^{11}, one for each section. The arm E^2 of the section D^{11} at its outer end projects across the under side of the arm E of the section D^4 of the rod-sections D^4 D^{11}, and F is a spiral spring at one end fastened on the arm E^2 of section D^{11} and at its opposite end hung on the upper end of a post G, secured to the arm E of the section D^4, and all so that the turning or swiveling of section D^{11} on section D^4 of the rod-sections D^4 D^{11} (the section D^4 being held against turning, as hereinafter described) is in one direction against and in the other direction by the tension of said spring, but limited, however, by the abutment of section D^{11} against the under side of section D^4. The section D^4 is made fast to a shaft H, supported at its opposite end portions in suitable stationary bearings. (Not shown.) This shaft H has a pulley-wheel J, connected by a belt K with a pulley-wheel L of the burnisher-shaft B, and also it has a pulley-wheel J^2, to be belted in any suitable manner for driving it and the pulley-wheel J and shaft H, common to both pulley-wheels J J^2, and by the belt K the burnisher-shaft B, which, and also the burnisher-head A carried by it, are thereby rotated in common and the shaft B in its bearings.

The burnisher A may be made of metal, sandstone, or other suitable material, and in use the edge of the heel to be burnished by its working-face and said working-face are brought into and held in contact, and either the heel-edge or the burnisher, or both, are then suitably moved upon and otherwise as to each other as may be necessary or desirable to present the burnisher to the heel-edge or the heel-edge to the burnisher at all parts of the heel-edge. The imperforate or closed working-face A^2 for a burnisher substantially hemispherical is most advantageous in that it is capable of working on every part of the heel-edge presented to it or to which it is presented and whatever may be the shape of the heel, and in that it secures a most perfect, compact, even, and polished surface to the heel-edge. It is preferable that the burnisher should be adapted, and as shown and described, or otherwise suitably, to be positively rotated; but obviously it is not necessary, for the rea-

son that because of the shape of its working-face its contact and bearing on the heel-edge and movement either of the heel-edge as to the burnisher or of the burnisher as to the heel-edge, or of both as to each other, are sufficient for and will cause its rotation.

Having thus described my invention, what I claim, and desire to secure by Letters Patent, is—

The combination of the burnisher A, having a substantially hemispherical working-face, a shaft B for the burnisher, a carrier C, in which the shaft rotates, the rod-sections D^{11} and D^{4}, swiveled together and having respectively the arms E E^{2}, a spring F, yieldingly connecting the arms, an arm D, connecting the shaft-carrier with one of the swiveled rod-sections, and operating mechanism, substantially as described.

In testimony whereof I have hereunto set my hand in the presence of two subscribing witnesses.

WINSLOW F. SAMPSON.

Witnesses:

ALBERT W. BROWN,

FRANCES M. BROWN.