April 24, 1962 G. P. REGAN, SR., ETAL 3,031,339

COATING MACHINE AND METHOD

Filed Aug. 10, 1959 2 Sheets-Sheet 1

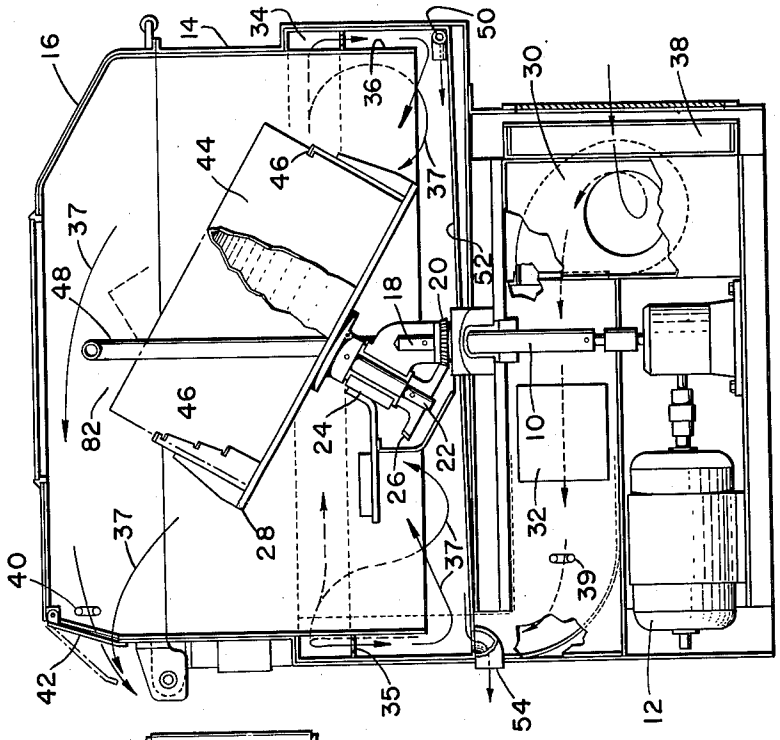

FIG. 1

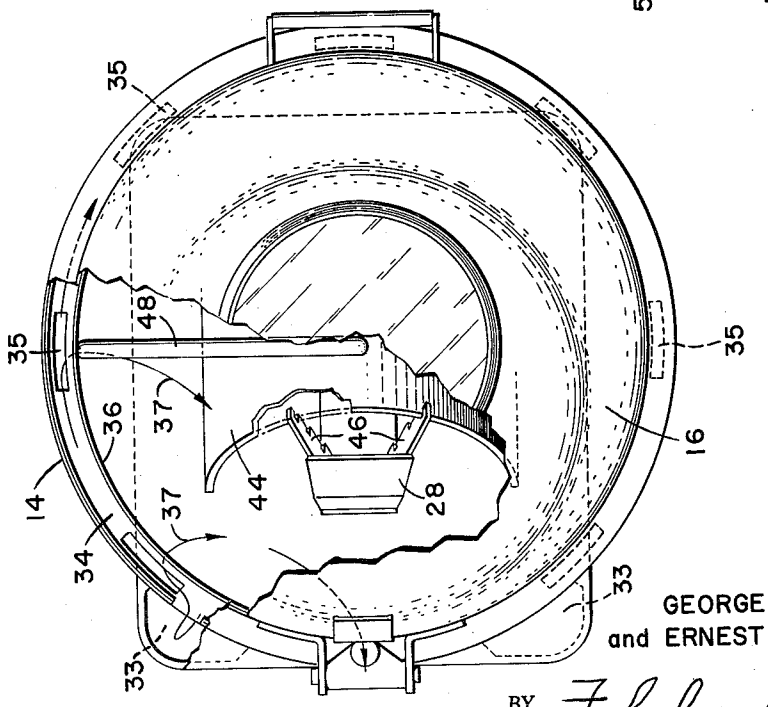

FIG. 2

INVENTORS
GEORGE P. REGAN SR.
and ERNEST N. HASALA

BY Flehr & Swain
ATTORNEYS

April 24, 1962 G. P. REGAN, SR., ETAL 3,031,339

COATING MACHINE AND METHOD

Filed Aug. 10, 1959 2 Sheets-Sheet 2

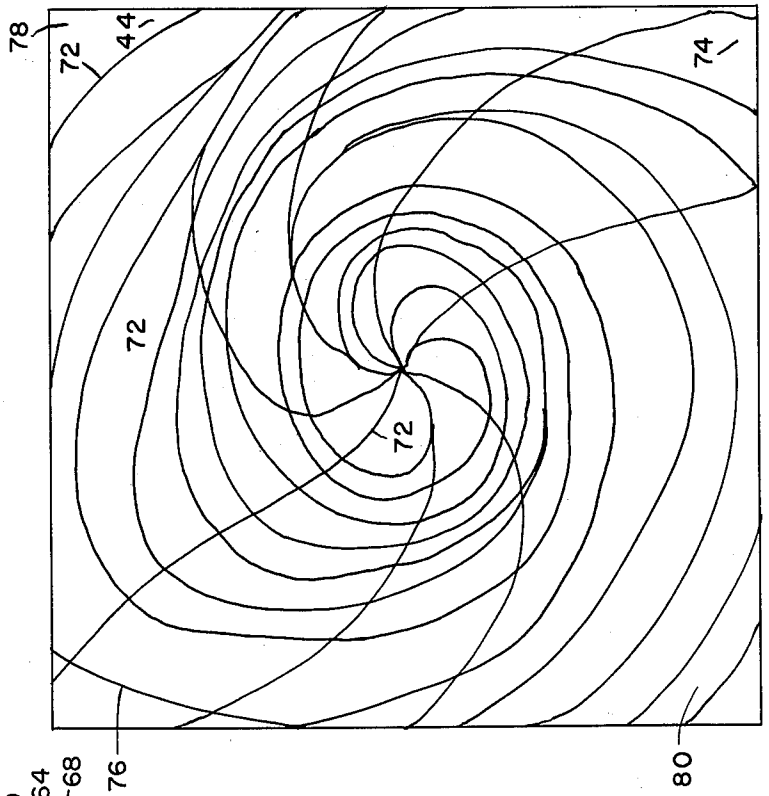

FIG. 4

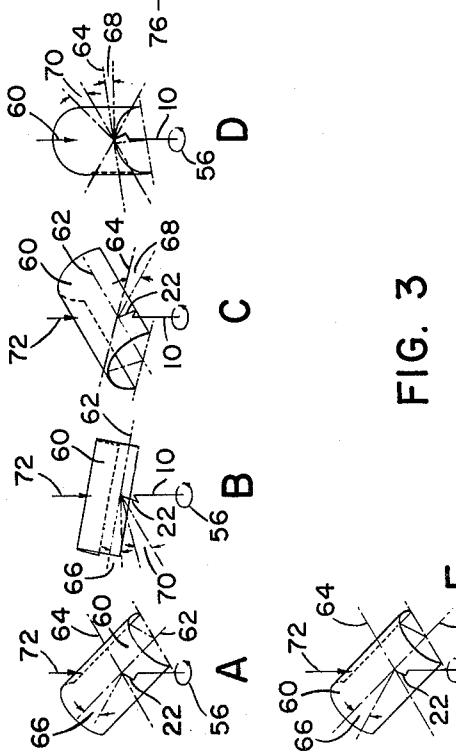

FIG. 3

INVENTORS
GEORGE P. REGAN SR.
and ERNEST N. HASALA

BY Fleehr & Swain
ATTORNEYS

United States Patent Office

3,031,339

Patented Apr. 24, 1962

3,031,339

COATING MACHINE AND METHOD

George P. Regan, Sr., and Ernest N. Hasala, San Francisco, Calif., assignors to Regan Industries, Inc., Burlingame, Calif., a corporation of California

Filed Aug. 10, 1959, Ser. No. 832,580
11 Claims. (Cl. 117—101)

This invention relates generally to apparatus for spreading a wet coating on surfaces and for drying surfaces so coated, and more particularly relates to such apparatus by which curved printing plates can be uniformly coated with a light-sensitive resist material.

Numerous machines have been developed for the purpose of coating flat printing plates with sensitized resist solutions of various types, a typical machine being illustrated in U.S. Patent 2,033,469. In general, these machines make use of centrifugal force to insure a uniform coating, and mount the plates in a horizontal plane to eliminate any problems arising from gravity flow. While such apparatus is satisfactory for flat plates, it is entirely unsuited for curved or semicylindrical plates such as handled by the apparatus of the present invention. A principal difficulty is inability of the prior apparatus to successfully compensate for the force of gravity in supplementing the centrifugal action. In fact, so far as we are aware, the obtaining of reproducible, even coatings on semicylindrical printing plates has never been successfully accomplished.

In general, it is an object of the present invention to provide an apparatus and procedure for coating curved printing plates whereby even coatings of uniform controllable thickness can be successfully obtained on a repetitive production basis.

Another object of the invention is to provide a machine for this purpose in which the plates may be dried in an atmosphere controlled as to temperature and humidity, and in which the coating procedure will be automatically terminated at a proper point in the drying cycle so as to avoid damaging of the coating.

Another object of the invention is to provide such a machine which is relatively simple in construction and virtually foolproof in operation.

Other objects and advantages of the invention will be apparent from the following description and from the drawing in which:

FIGURE 1 is a view in vertical section of a coating machine embodying the invention;

FIGURE 2 is a view in top plan, and partly in section, of the machine of FIGURE 1;

FIGURE 3 is a series of diagrammatic representations, illustrating the movement of a plate during the coating operation; and

FIGURE 4 is a diagrammatic representation of the spreading of the coating over the surface of the plate, during the coating operation.

In general, the coating apparatus of the present invention employs an auxiliary shaft which is supported by and rotated with a main vertical shaft. The auxiliary shaft is inclined to the vertical and is mounted for relative rotation with respect to the main shaft. The auxiliary shaft is engaged by means on the housing so that upon rotation of the main shaft, the auxiliary shaft is independently rotated on its own axis, as well as about the axis of the main shaft. The auxiliary shaft supports a plate mount and with the plate mount is enclosed within a liquid-tight housing through which drying air may be circulated in a closed system. Preferably the drying air is controlled as to temperature and humidity, with the control operating to terminate the drying operation when a desired final temperature and degree of dryness

is achieved. In a preferred embodiment, the plate being coated is mounted on the auxiliary shaft so as to be rotated about an axis perpendicular to its own axis, and the direction of such rotation is periodically reversed. In another embodiment, the plate being coated is rotated about its own axis.

Referring to the drawings in detail, FIGURES 1 to 4 illustrate the principal embodiment of the invention wherein the auxiliary shaft is inclined to the vertical, preferably at an angle of between 15 and 45° to the vertical. The main or drive shaft 10 is powered by a suitable motor, such as the electrical motor 12, which may be reversible in its operation. This shaft extends upwardly into the chamber of the housing 14, which is suitably provided with a pivoted cover 16. The upper end 18 of the shaft 10 is rotatably received within a stationary gear means 20 adjacent the floor of the housing.

The auxiliary shaft 22 is supported for rotation with the main shaft 10 by means of the tilt assembly 24, and is freely rotatable with respect to both the tilt assembly and the main shaft. The lower end of the auxiliary shaft is non-rotatably secured to a gear means 26 which meshes with the stationary gear 20. An adjustable mount 28 is likewise non-rotatably attached to the upper end of the auxiliary shaft, and provides a means for supporting a plate to be coated, as will hereinafter be explained. Preferably the ratio between the gears 26 and 20 is such that the rate of rotation of the plate mount 28, on the axis of shaft 22, is approximately half the rate of rotation of the tilt assembly 24, on the axis of the main shaft 10.

As illustrated, a blower or fan 30 is provided to circulate air past a heating element 32, and upwardly through the ducts 33 into the channel 34 surrounding the coating chamber. From there the air is circulated down through the openings 35, beneath the baffle 36, and up through the chamber, as generally indicated by the arrows 37. An inlet filter 38 can be provided to remove dust, lint and other contaminants from the entering air, and preferably is of the electrostatic type, for example, as described in U.S. Patent 2,297,601, or 2,729,302. The temperature of the entering air can also be regulated by a suitable control for the heater 32, responsive to maximum and minimum temperatures as sensed by the recording unit 39. More specifically, the heater 32 can be controlled to operate should the temperature of the entering air fall below about 150° F. and to cease operation should the temperature of the entering air rise above about 180° F. The controller can also include a sensing unit 40 adapted to stop the operation of the machine, and of the heater 32, when the temperature of the air discharging through the vent 42 exceeds a desired upper limit, say 150° F. or below. The controller therefore functions to provide a simple humidity control of the circulating air by means of the temperature of the air entering and leaving the coating chamber. It will be understood that particular temperature and humidity controllers of the type referred to are well known in the art, and consequently no detailed description is necessary.

As shown in FIGURES 1 and 2, a plate 44 to be coated is mounted directly on the mount 28 for rotation about the main axis 10 and the auxiliary axis 22. The mount is so constructed, as at 46, to permit curved plates of different sizes to be supportingly received for rotation during the coating operation. The sensitized resist solution is applied directly to the plate by means of a suitable feed conduit 48 which has its outlet coincident with the axis of the main shaft 10. The housing 14 can also be furnished with fluid inlets 50 adapted to periodically circulate solvent liquid through the housing to flush the interior surfaces of the housing 14 and thereby remove coating solution spun from the plate. To facilitate this opera-

tion, the floor 52 of the housing can be conveniently inclined toward a drain 54 for the solvent liquid.

As previously indicated, rotation of the main shaft 10 effects a simultaneous rotation of the plate mount 28 about two independent axes, the axis of the main shaft 10 and the axis of the auxiliary shaft 22. This simultaneous rotation is due to the rolling of the gear 26 about the stationary gear 10, with the gear ratio preferably being such that the speed of rotation of shaft 22 is substantially less than that of the main shaft 10 (a gear ratio of 2:1 being optimum). The net effect of this independent, simultaneous rotation is to produce a generally wobbling rotary action of the plate mount 28 about the main shaft. This effect is diagrammatically illustrated in FIGURE 3 where successive positions of the plate are represented by the positions A through E.

In FIGURE 3, the direction of rotation about the main shaft 10 is indicated by the arrows 56, whereas the relative speed of the rotation of the auxiliary shaft 22 about the main shaft is represented by the successive positions shown. The rotary movement of the plate being coated, on the axis 22, is likewise represented by the different positions of the dot 60. It will be observed that the plate rotates at a slower rate than does the main shaft. To facilitate an understanding of the wobbling action, the longitudinal axis of the plate is represented by the line 62 whereas the transverse axis (perpendicular to the longitudinal axis) is represented by the line 64. The degree of tilt along the longitudinal axis 62 is represented by the angle 66 whereas the degree of tilt along the transverse axis 64 is represented by the angle 68. A combined angle of tilt including both longitudinal and transverse components is represented by the angle 70. The arrow 72 illustrates the point of introduction of coating solution through the conduit 48.

It will be observed that in position A of FIGURE 3, the axial tilt of the plate 44 predominates and that there is no lateral tilt. In position B there is both axial and lateral tilt as represented by the combined angle of tilt 70. In position C, there is only lateral tilt 68 and no axial tilt. In position D, there is again combined tilt 70, and finally in position E there is only axial tilt as the plate reverses its position on the mount. After a short period of counterclockwise rotation in the indicated direction about the main shaft, the motor 12 can be reversed to produce clockwise rotation about the shafts 10 and 22. Such operation causes a reversal of the wobbling action illustrated in FIGURE 3 so that over a complete coating cycle there is a uniform resolution of the forces of gravity and centrifugal force for the purposes of spreading the coating solution upon the plate.

Experience has shown that the operation just described produces an unusually effective and even coating of the sensitized resist material over the curved plate surface. The nature of this coating action is illustrated diagrammatically in FIGURE 4 which represents the forces spreading the coating material outward on the curved plate, during rotation in a counterclockwise direction about the main axis 10. In the figures, each line 72 represents an advancing front of the coating material on a flattened representation of the plate 44. It will be noted that during this phase of rotation the coating material will be advanced toward the corners 74 and 76 of the plate. Upon reversal of the direction of rotation, a similar effect will be achieved except that the fronts 72 will be advanced toward the corners 78 and 80 of the plate. The net effect is an extremely uniform coating of the semicylindrical surface without any tendency of the coating to pile up and become thicker at particular spots on the plate, such as at the corners or at the center.

The operation of the coating machine just described in a typical plate coating operation can now be summarized as follows.

The plate to be coated is first cleaned and then rigidly secured between the mounting devices 46 on the plate 28. The motor 12 is energized causing the main and auxiliary shafts to produce the wobbling rotary action of the plate mount previously described. Periodic reversal of the motor causes the direction of this wobbling action to likewise be reversed. The sensitized resist solution can now be introduced through the conduit 48 into the conical depression produced by the wobbling plate, as at 82, in FIGURE 1. A uniform even spreading of the coating material results as generally suggested in FIGURE 4. During this spreading operation, air is continuously circulated through the filter 38 past the heater 32 and into the interior of the coating chamber 14. The temperature sensing unit 39 causes the heater to maintain the temperature of the entering air within a predetermined range to achieve the desired drying effect. The air which passes upwardly through the ducts 33 is diverted downwardly by the baffle 36 so that it circulates upwardly past the rotating plate to the outlet vent 42. The pressure of the air circulating into the coating chamber is sufficient to open the vent for purposes of exhaust. The controller element 40 adjacent the vent senses the wet bulb temperature of the outgoing air, which is depressed due to the moisture picked up during the drying operation. As the drying nears completion, higher temperatures are sensed by the element 40 until a final desired drying temperature functions through the controller to stop the motor 12 and to de-energize the heater 32. The cover 16 can now be opened and the dried, uniformly coated plate 44 removed for further processing (e.g. printing and etching).

To those skilled in the art to which this invention relates, many changes in construction and widely differing embodiments and applications of the invention will suggest themselves without departing from the spirit and scope of the invention. For example, although it is preferable to rotate the plates about the auxiliary axis at a slower rate than about the main axis, a satisfactory result can be obtained by a reverse of this procedure. Also, considerable variation in the temperature and humidity control of the circulating drying air is contemplated. For example, the circulating air can be dried or fully air conditioned prior to admission to the coating chamber. It should be understood therefore that the disclosures and description herein are purely illustrative and not intended to be in any sense limiting.

We claim:

1. In a method of uniformly coating a curved printing plate to provide an even coating of controllable thickness, the steps of applying a sensitized resist material to an outer surface of said curved plate, rotating said plate about a tilt axis perpendicular to the geometric axis of said plate, simultaneously rotating said plate about a main axis angularly disposed at an angle of less than 90° with respect to said tilt axis, and simultaneously subjecting said plate to the drying effect of circulating air of controlled temperature, said simultaneous rotation effecting a wobble action of said plate about said main axis.

2. A method as in claim 1 wherein said main axis is vertical.

3. A method as in claim 1 wherein the rotation about said main axis is periodically reversed.

4. In a method of uniformly coating a curved printing plate to provide an even coating of controllable thickness, the steps of applying a sensitized resist material to an outer surface of said curved plate, rotating said plate about a tilt axis perpendicular to the geometric axis of said plate to cause a successive reversal of tilt of said plate with respect to said perpendicular axis, and simultaneously rotating said plate about a main axis angularly disposed with respect to said tilt axis to cause a successive reversal of tilt of said plate with respect to its geometric axis, said simultaneous rotation effecting a wobble action of said plate about its main axis.

5. In an apparatus for coating curved printing plates, a vertical shaft, means for rotating said vertical shaft, an

auxiliary shaft supported by said vertical shaft for rotation therewith, said auxiliary shaft being inclined to the vertical and mounted for relative rotation with respect to said vertical shaft, a plate mount carried by said auxiliary shaft, said plate mount having means to receive a curved plate so that its axis is substantially perpendicular to the axis of said auxiliary shaft, a liquid tight housing surrounding the auxiliary shaft and plate mount, and means fixed with respect to the housing and engageable with said auxiliary shaft whereby the latter is caused to independently rotate upon rotation of said vertical shaft.

6. An apparatus as in claim 5, wherein the angle of inclination of said auxiliary shaft to the vertical is between 15 and 45°.

7. In an apparatus for applying a uniform coating to curved printing plates: a liquid-tight housing, a vertical shaft extending upwardly into said housing and mounted for rotation with respect to said housing, an auxiliary shaft supported by said vertical shaft for rotation therewith, said auxiliary shaft being inclined to the vertical and mounted for relative rotation with respect to said vertical shaft, a plate mount carried by the auxiliary shaft, said plate mount having means to receive a curved plate so that its axis is substantially perpendicular to the axis of said auxiliary shaft, means for rotating said vertical shaft, means on said housing and engageable with said auxiliary shaft to cause rotation of the latter upon rotation of said vertical shaft, and means for circulating heated air through said housing for the purpose of drying a plate held by said plate mount, whereby a coating material in liquid condition can be poured on a curved plate and such plate dried as it is simulatneously rotated about the separate axes of said vertical and auxiliary shafts to provide the desired uniform coating.

8. An apparatus as in claim 7 wherein means are provided for circulating liquid through said housing, whereby a solvent for coating solution spun off the plate mount can be periodically circulated through said housing.

9. An apparatus as in claim 7 wherein said means for circulating heated air includes a heater for the air operable within a desired inlet temperature range as determined by inlet control means and adapted to cease operation upon a maximum temperature within the housing as determined by an outlet control means.

10. An apparatus as in claim 9 wherein self-contained electrostatic filter means are additionally provided to remove dust, lint and other contaminants from the circulating air.

11. In an apparatus for applying a uniform coating to curved printing plates: a liquid-tight housing, a vertical shaft extending upwardly into said housing and mounted for rotation with respect to the same, an auxiliary shaft supported by said vertical shaft for rotation therewith, said auxiliary shaft being inclined to the vertical and mounted for independent rotation with respect to said vertical shaft, said auxiliary shaft carrying a plate mount, said plate mount including means to mount a curved plate so that its axis is substantially perpendicular to the axis of said auxiliary shaft, means for rotating said vertical shaft, gear means on said vertical shaft engageable with corresponding gear means on said auxiliary shaft whereby rotation of the vertical shaft means will cause independent rotation of said auxiliary shaft, means for circulating air through the housing for purposes of drying coated plates supported on said plate mount, means for heating such circulating air, and filter means to remove dust, lint and other contaminants circulated through the housing, means for periodically circulating solvent liquid through the housing to flush coating material spun off the plate mounts from within the housing, and control means for regulating the inlet and sensing the outlet temperature of the circulating air whereby the drying is terminated at a desired condition of humidity within the housing.

References Cited in the file of this patent

UNITED STATES PATENTS

1,770,236	Jennings	July 8, 1930
1,842,154	Durham	Jan. 19, 1932
2,084,642	Henderson	June 22, 1937
2,148,558	Huebner	Feb. 28, 1939
2,446,476	Huebner	Dec. 9, 1944
2,701,543	Moore	Feb. 8, 1955