Nov. 20, 1934. A. FRITZ 1,981,411

ANNEALING AND PICKLING PLANT

Filed Aug. 4, 1932 3 Sheets-Sheet 1

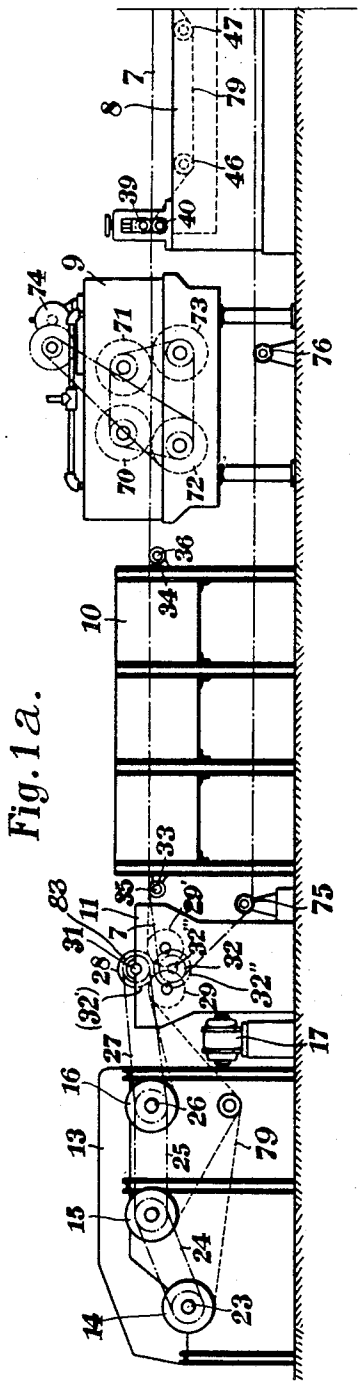

Fig. 1a.

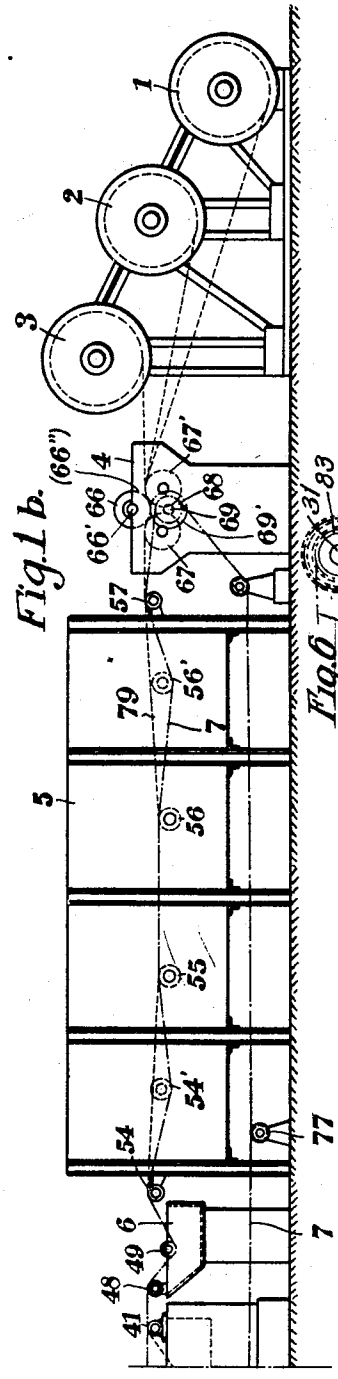

Fig. 1b.

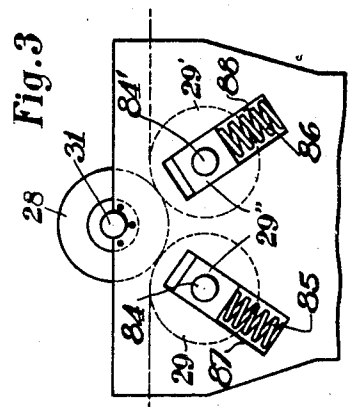

Fig. 3

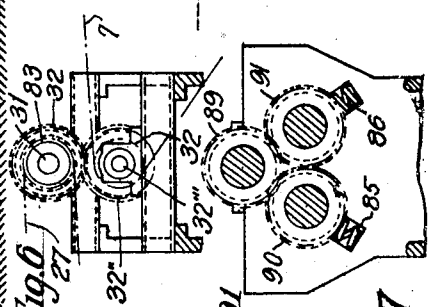

Fig. 6

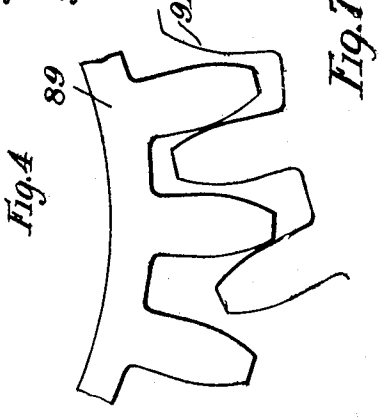

Fig. 7



Fig. 4

Inventor:
Arnold Fritz
By Knight Bros
His attys.

Nov. 20, 1934. A. FRITZ 1,981,411

ANNEALING AND PICKLING PLANT

Filed Aug. 4, 1932 3 Sheets-Sheet 2

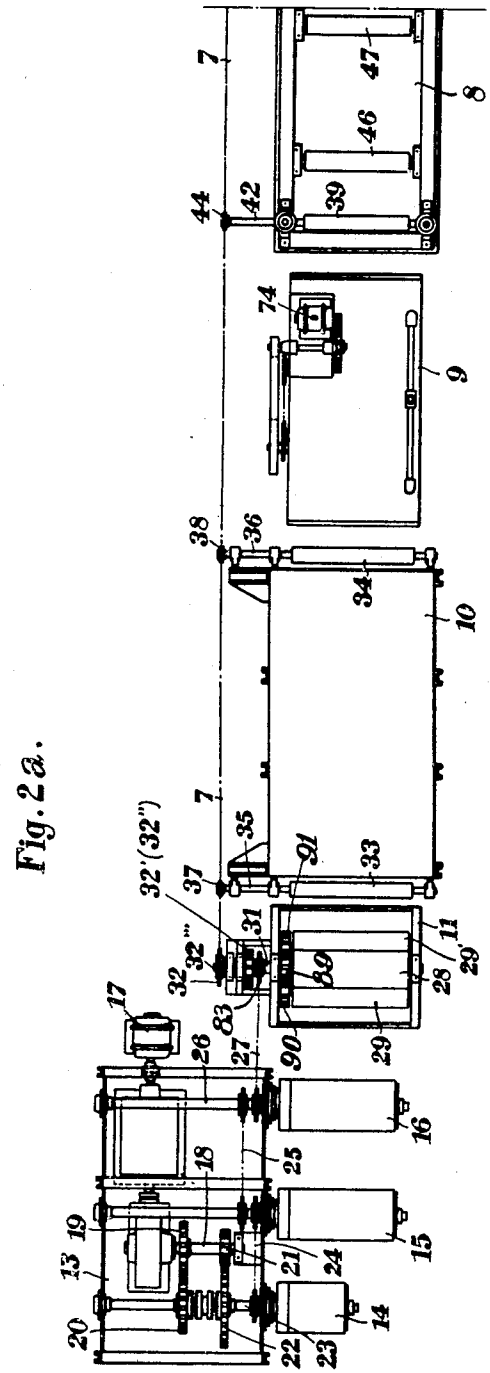

Fig. 2a.

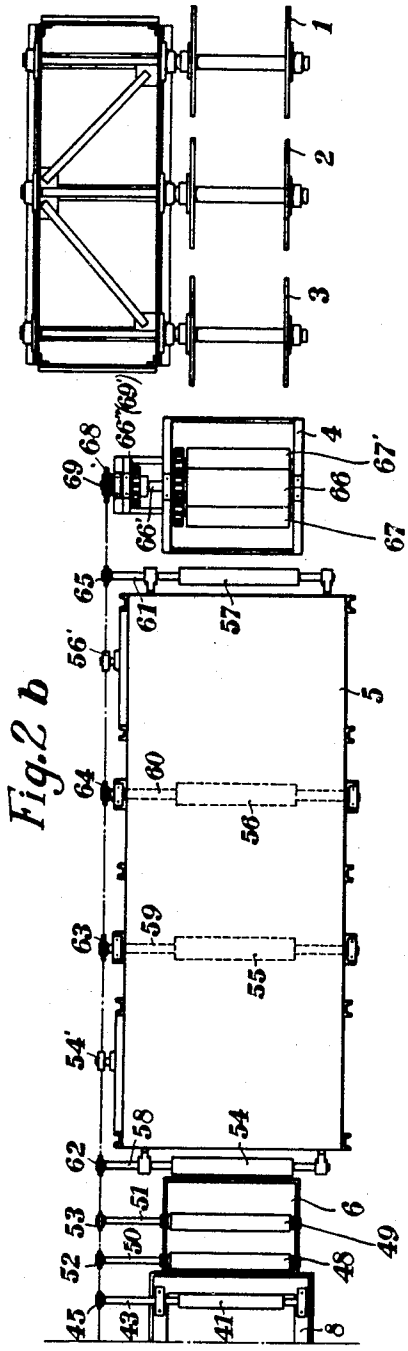

Fig. 2 b

Inventor:
Arnold Fritz
By Knight Bros
His attys.

Nov. 20, 1934. A. FRITZ 1,981,411

ANNEALING AND PICKLING PLANT

Filed Aug. 4, 1932 3 Sheets-Sheet 3

Fig. 8

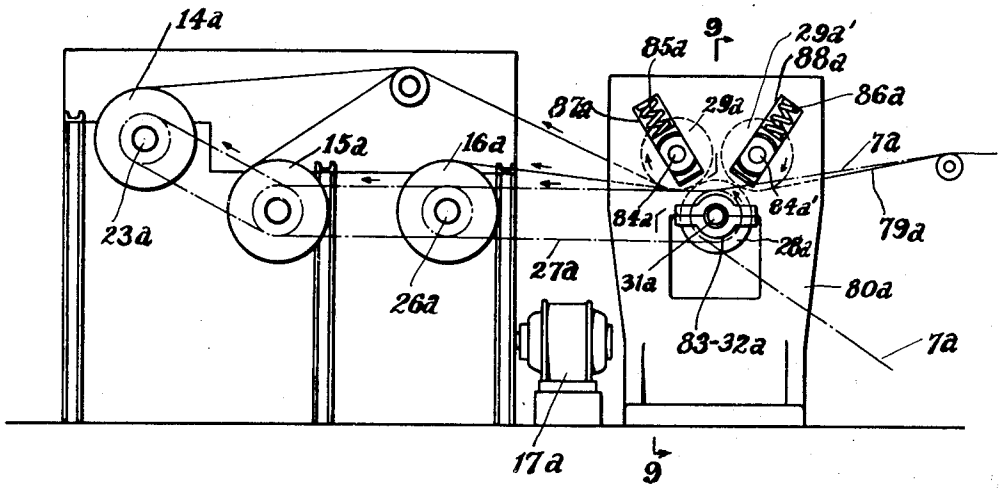


Fig. 5

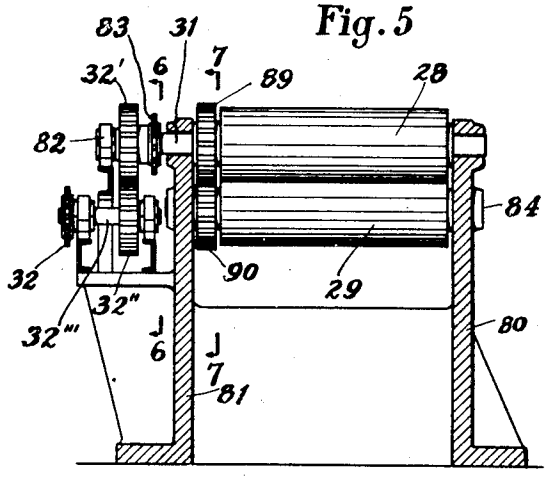


Fig. 9

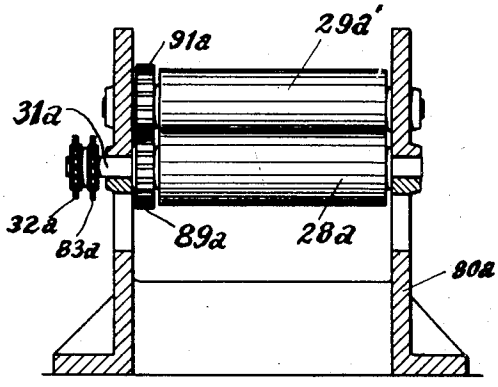


Inventor:
ARNOLD FRITZ
by Knight Bros.
Attorneys

Patented Nov. 20, 1934 1,981,411

# UNITED STATES PATENT OFFICE

1,981,411

## ANNEALING AND PICKLING PLANT

Arnold Fritz, Magdeburg, Germany, assignor to the firm Fried. Krupp Grusonwerk Aktiengesellschaft, Magdeburg-Buckau, Germany

Application August 4, 1932, Serial No. 627,521
In Germany June 16, 1932

3 Claims. (Cl. 266—3)

Annealing and pickling installations for metal strip comprise, in addition to the annealing furnace, a number of elements such as one or more strip winding-off racks, water tank, pickling trough, washing machine, drying oven and winding gear. Between the annealing furnace and the winding-off racks on the one hand, and the drying oven and the winding gear on the other hand, there is also a draw-through gear. A series of carrier and guide rolls is necessary for handling the material to be treated. As a general rule these rolls are not driven but are rotated by the motion of the strip through the apparatus. It frequently happens, especially when handling thin strip, that the rolls, even when set in bearings which run easily, are not continuously rotated by the material. Relative motion then takes place between the strip and the rolls which causes the strip to rub on the rolls. In this way it is possible for the sensitive surface of the strip to become scratched, thus rendering the strip useless. In order to obviate this disadvantage, it has already been proposed to provide the rolls with a covering of soft material such as rubber. Such rolls, cannot, however, be used in all sections of the plant, for instance, in the annealing furnace, since the covering cannot withstand the high furnace temperature.

It has also been proposed to drive some rolls, for example, in the annealing furnace, in order to move the material through the furnace.

According to the present invention the disadvantages mentioned above are eliminated in that the rolls, especially those whose surface consists of a material which might damage the material to be treated, for instance, rolls with a metallic surface, are driven and the drive is controlled from the winding gear. This has the advantage that no relative motion can now take place between the above-mentioned rolls and the strip. Furthermore, with a combined drive of the rolls and the strip, when the speed of the strip is altered the peripheral speed of the rolls is also changed to suit it. No relative motion can therefore occur between the rolls and the material and consequently no abrasive damage is caused. A chain-drive may be used for the rolls. It is then recommended that for the draw-in gear three rolls should be employed instead of the two rolls one above the other formerly used, these being arranged with one above and two below, or vice-versa, in which case the upper roll is in the centre and the two lower rolls are arranged below this. This has the advantage that the material forming the strip is bent only by a small amount as compared with the former arrangement of the rolls in which the material was wound around the rolls in S form. The latter is not to be recommended for thick strip and under certain conditions is disadvantageous. At the same time, with the three-roll arrangement, when several strips pass through the annealing and pickling plant side-by-side, the thrust caused by the passage of one of two adjacent strips causes the one roll to give, and thereby the friction between the other strip or strips and the upper roll to cease; firm contact, however, between those strips and the upper roll is ensured by the other roll.

A typical lay-out of the details of the invention is shown in the drawings.

Figs. 1*a* and 1*b* together provide a side view of the annealing and pickling plant,

Figs. 2*a* and 2*b* together provide a corresponding plan view,

Figure 3 illustrates a broken side view showing optional features of one set of draw-through rolls,

Fig. 4 shows a detail of the drive means for the draw-through rolls,

Fig. 5 shows a transverse section taken centrally of Fig. 3,

Fig. 6 is a sectional view of the machine along line 6—6 of Fig. 5,

Fig. 7 is a sectional view of the machine along line 7—7 of Fig. 5,

Fig. 8 is a front view of another embodiment of the part of the assembly shown at the left portion of Fig. 1*a*, with an inverted arrangement of the draw-through gear, and

Fig. 9 is a sectional view of the machine along line 9—9 of Fig. 8.

A typical plant consists of the winding-off racks 1, 2 and 3, the draw-through gear 4, annealing furnace 5, water tank 6, pickling tank 8, washer 9, drying oven 10, draw-through gear 11 and the winding gear 13. The winding drums 14, 15 and 16 of this winding gear are driven by the motor 17 (Figure 2), and this motor drives, through regulating and reduction gear, shaft 18 from which, through gearing, for example 19 and 20, or 21 and 22, shaft 23 of drum 14 is driven. Drums 15 and 16 are also driven from shaft 23 through chain-drive 24 and 25. The upper roll 28 of the draw-through gear 11 is driven from shaft 26 of drum 16 through chain-drive 27 and this roll is coupled through toothed gearing to the lower rolls 29 and 29′ which are arranged symmetrically with relation to roll 28.

It is advisable to mount the two lower rolls 29 and 29′ in self-adjusting bearings 29″ as illustrated in Fig. 3. The upper roll 28 is mounted in the supports 80, 81 (Fig. 5). The extension of shaft 31, which carries the upper roll 28, rests in bearing 82, and between 82 and support 81, carries a chain sprocket 83 for the chain drive 27 and a gear wheel 32′. The shafts 84 and 84′, carrying the lower rolls 29 and 29′ respectively, rest in the self-adjustable bearings 29″ which are shiftable in recesses 87, 88 of the supports 80, 81. The bearings 29″ are influenced by the springs 85, 86 (Fig. 3) to press the lower rolls 29, 29′ upwardly against the upper roll 28. Gear wheels 89, 90 and 91 (Figs. 2, 4, 5, and 7) are mounted upon shafts 31, 84 and 84′ adjacent rolls 28, 29 and 29′ respectively. The teeth of gear wheel 89 mesh with those of gear wheels 90, 91 and the teeth of the wheels are longer than is usually the case, so that upon a slight withdrawal of the rolls 29 and 29′, an engagement between the teeth is retained. A gear wheel 32″ (Figs. 5, 6) on shaft 32‴ meshes with gear wheel 32′ on shaft 31. Upon shaft 32‴ is mounted a chain sprocket 32 upon which travels the chain 7. The three rolls 28, 29, 29′ may be so arranged that they do not touch one another. The yielding of roll 29 does not eliminate the retarding of the passage of the sheet strips through the draw-through gear, for the upward thrust of roll 29′ is still effective against roll 28 to maintain a firm contact upon the strips in the course of their passage through this unit. This arrangement thus presents a distinct advantage over that employing only two rolls, one above the other. Thus, first the rolls 33 and 34 of drying oven 10 are driven through chain-wheels 37 and 38 on shafts 35 and 36. Further, rolls 39, 40 and 41 of pickling tank 8 are driven, for which purpose chain-wheels 44 and 45 are provided on shafts 42 and 43 of rolls 39 and 41. The rolls 46 and 47, which rotate in the liquid of the pickling tank and which are provided with a soft covering, do not require to be driven since, owing to the flexibility of the covering, their rotation by the strip is assured. Rolls 48 and 49 of water tank 6 are driven through chain-wheels 52 and 53 on shafts 50 and 51 and rolls 54, 55, 56 and 57 of the annealing furnace through chain-wheels 62, 63, 64, and 65 on shafts 58, 59, 60 and 61. The rolls 54′ and 56′ are guiding means for the chain 7. The rolls 66, 67 and 67′ of the draw-through gear 4 are driven through the toothed wheel 69′ on the shaft 69. The toothed wheel 69′ is driven through the chain wheel 68 mounted on the shaft 69. On the shaft 66′ of the upper roll 66 is mounted the toothed wheel 66″. This wheel is coupled through toothgearing to the lower rolls 67, 67′. The draw-through gear 4 may be of exactly the same design as the draw-through gear 11. It is evident that in the plant the drive of all the rolls except those with flexible surfaces is dependent on that of the winding gear. The speed, therefore, of all rolls whose surfaces might cause damage to the material corresponds always to the required working speed of the strip, so that all danger is eliminated of scoring the strip through slipping on the rolls. The rolls 75, 76, 77 and 78 are guiding means for the loose side of the chain 7.

The brush-rolls 70, 71, 72 and 73 of the washer 9 may be driven separately from motor 74. Since, usually, the peripheral speed of the brush-rolls is higher than that of the material, these exert a driving force on it. The material coming from the winding-off racks 1, 2 and 3 and running to the winding drums 14, 15 and 16 is designated by 79.

Another arrangement of the winding gear and draw-through gear is illustrated in Fig. 8, and the same parts as shown in Fig. 1 are designated with like reference characters to which are appended the designation "*a*". In this instance, it is an inverted arrangement of that shown in Fig. 1, and two upper rolls 29*a* and 29*a*′ cooperate with a single lower roll 28*a*. The drive of the lower roll is effected by chain 27*a* revolving on sprocket wheel 83*a* mounted on shaft 31*a*. The chain 7*a* is driven from the chain sprocket wheel 32*a* mounted on shaft 31*a*. A removal of the thrust upon the web 79*a* entering the draw-through gear, occasioned by a lifting of the roller 29*a* by the two upper layers of the material, does not remove the yieldable pressure exercised by roller 29*a*′ upon the material.

The invention may be utilized for similar purposes in all devices where material, which must be protected from damage, is passed over rolls through a series of machines.

What I claim is:

1. In an apparatus for treating metallic strip material, a plurality of treating units comprising an annealing furnace, a quenching tank, a pickling tank, a washer, and a drier, a winding-off rack, a winding unit, draw-through units each comprising a plurality of rolls adjacent said rack and said winding unit, a plurality of rolls for guiding the strip material from said winding-off rack to said winding unit through said plurality of treating units, driving means for said winding unit, and chain transmission means between said winding unit, said last-mentioned rolls and said rolls of said draw-through units for imparting to the rolls for guiding the strip material through said plurality of treating units a peripheral velocity substantially identical with the linear velocity imparted by said winding unit to said strip material.

2. In an apparatus for treating metallic strip material, a plurality of treating units comprising an annealing furnace, a quenching tank, a pickling tank, a washer, and a drier, a winding-off rack, a winding unit, draw-through units, each comprising a roll on one side of the strip material, two rolls on the other side of the material symmetrically disposed with respect to said first roll, self-adjusting bearings for said last-mentioned rolls and means for yieldingly urging said rolls against the strip material and said first-mentioned roll, a plurality of rolls for guiding the strip material from said winding-off rack to said winding unit through said plurality of treating units, driving means for said winding unit, and chain transmission means between said winding unit, said last-mentioned rolls and said rolls of said draw-through units for imparting to the rolls for guiding the strip material through said plurality of treating units a peripheral velocity substantially identical with the linear velocity imparted by said winding unit to said strip material.

3. In an apparatus for treating metallic strip material, a plurality of treating units, a winding-off rack, a winding unit, draw-through units, each comprising a roll on one side of the strip material, two rolls on the other side of the material symmetrically disposed with respect to

said first roll, self-adjusting bearings for said last-mentioned rolls and means for yieldingly urging said rolls against the strip material and said first-mentioned roll, a plurality of rolls for guiding the strip material from said winding-off rack to said winding unit through said plurality of treating units, driving means for said winding unit, and chain transmission means between said winding unit, said last-mentioned rolls and said rolls of said draw-through units for imparting to the rolls for guiding the strip material through said plurality of treating units a peripheral velocity substantially identical with the linear velocity imparted by said winding unit to said strip material.

ARNOLD FRITZ.