Oct. 20, 1936. L. HORNBOSTEL 2,058,230

PUMP

Filed March 30, 1934 3 Sheets-Sheet 1

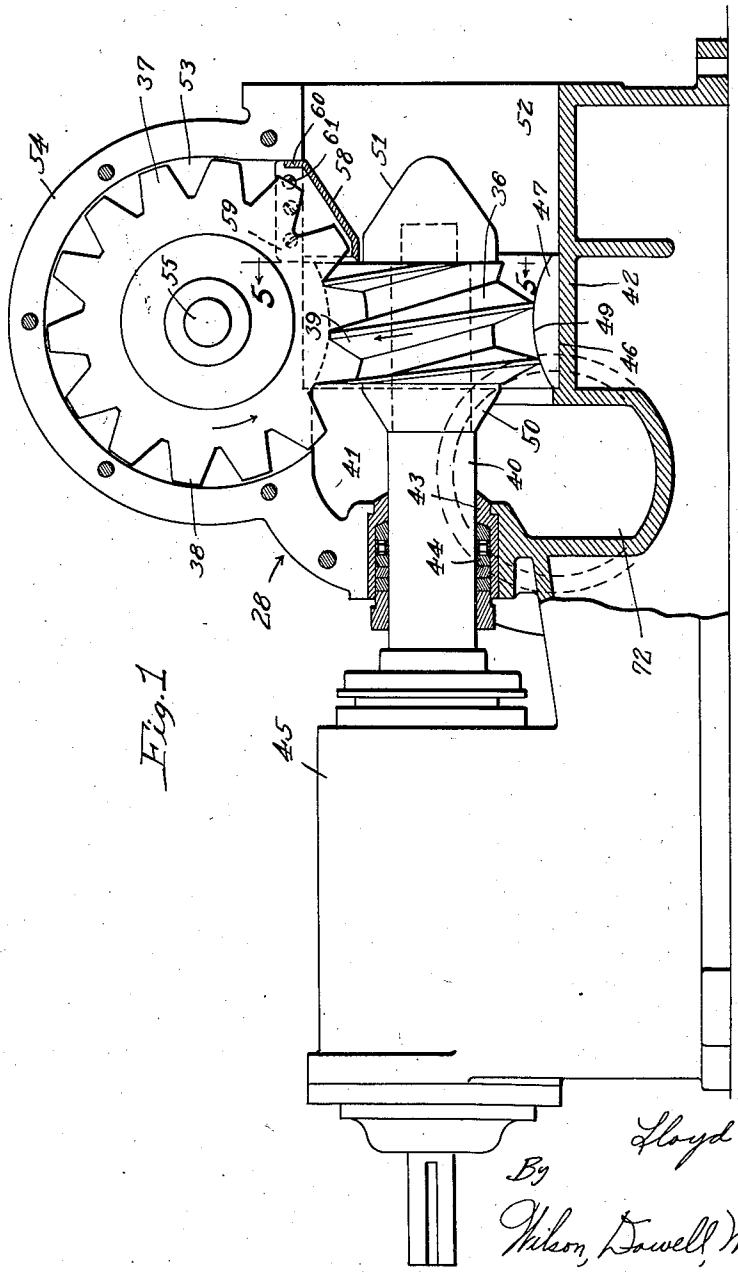

Fig. 1

Inventor:
Lloyd Hornbostel

By
Wilson, Dowell, McCann & Winterson
Attys.

Oct. 20, 1936. L. HORNBOSTEL 2,058,230

PUMP

Filed March 30, 1934 3 Sheets-Sheet 2

Fig. 2

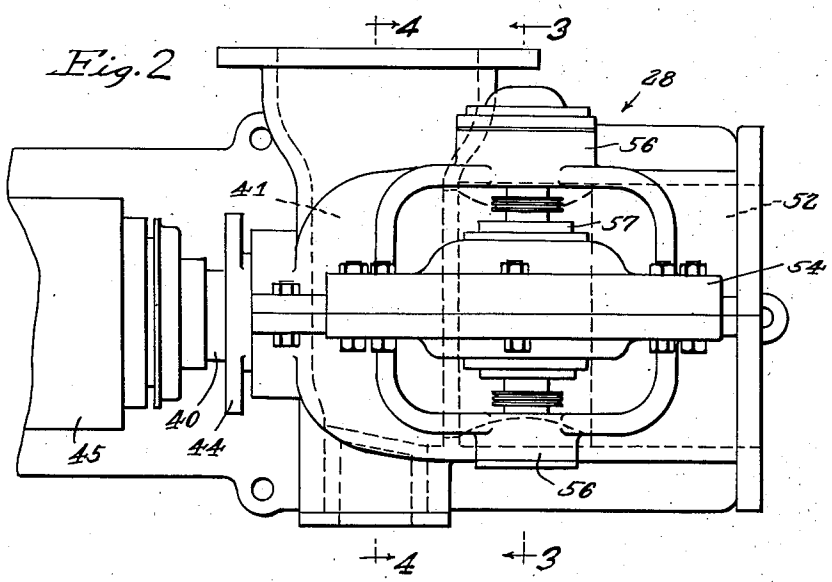

Fig. 3

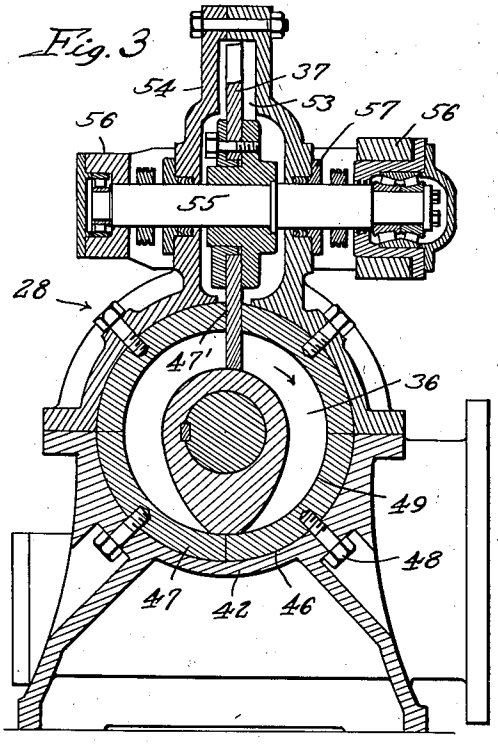

Fig. 4

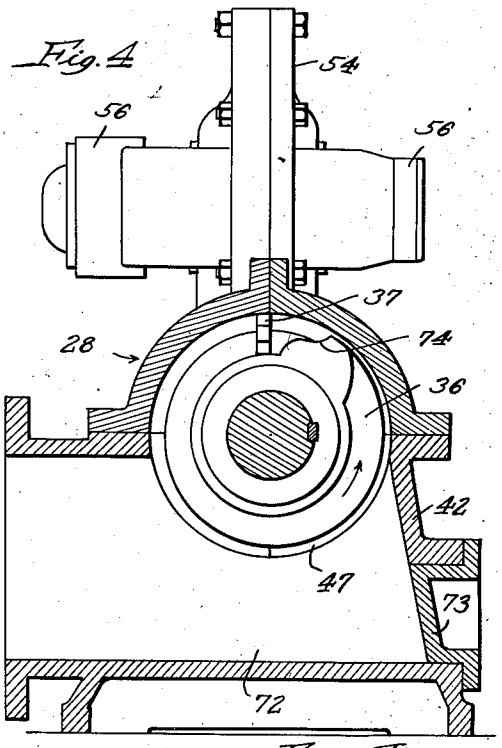

Inventor:
Lloyd Hornbostel

By

Wilson, Dowell, McCanna & Hinterer
Attys.

Oct. 20, 1936. L. HORNBOSTEL 2,058,230

PUMP

Filed March 30, 1934 3 Sheets-Sheet 3

Fig. 6.

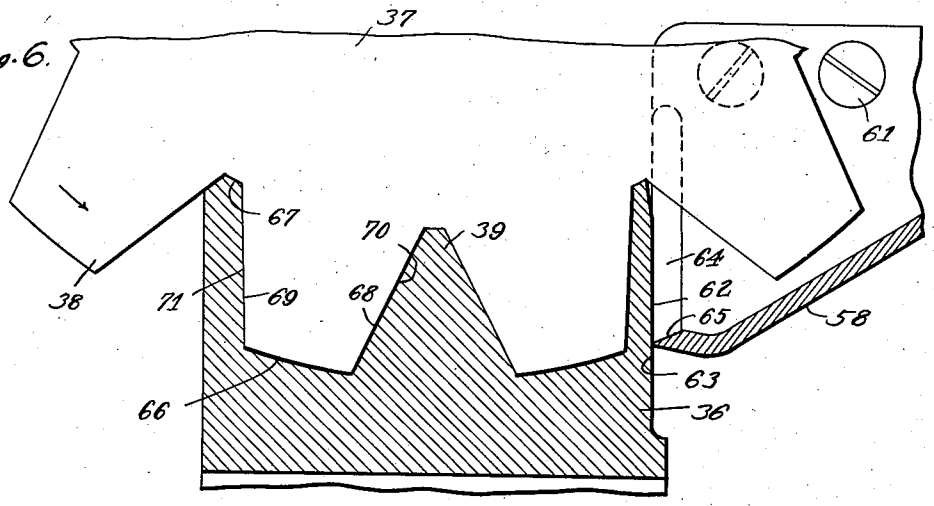

Fig. 7a. Fig 7b. Fig. 7c.

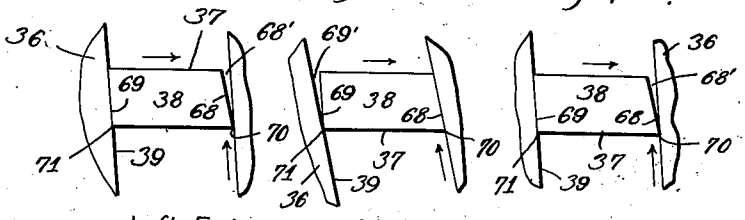

Fig. 5.

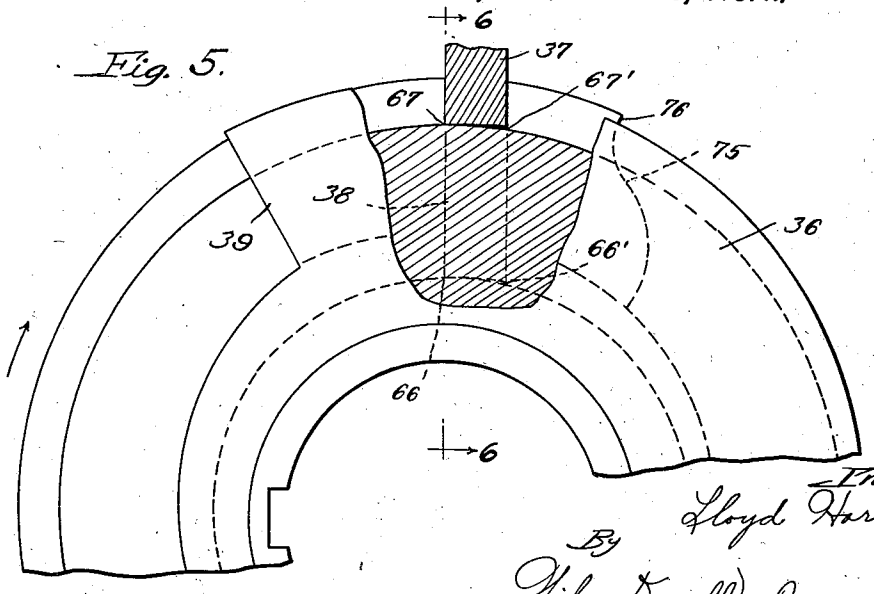

Inventor
Lloyd Hornbostel

By
Wilson, Dowell, McCanna & Winterson
Attys.

Patented Oct. 20, 1936 2,058,230

UNITED STATES PATENT OFFICE

2,058,230

PUMP

Lloyd Hornbostel, Beloit, Wis., assignor to Beloit Iron Works, Beloit, Wis., a corporation of Wisconsin

Application March 30, 1934, Serial No. 718,144

8 Claims. (Cl. 103—125)

This invention relates to paper making machines and has for its principal object the provision of a stock metering pump having positive displacement and adapted to be operated at different speeds by a variable speed motor directly connected therewith, the pump being arranged to be connected to the Fourdrinier end of a paper machine to pump the stock directly from the machine chest and feed it into the white water going to the fan pump, for delivery with the water to the machine screen. This permits the quantity of stock fed to the machine to be controlled entirely by varying the speed of the metering pump, thus avoiding the complicated system of regulation required heretofore and resulting in a more uniform thickness and weight of sheet.

Another important object is to provide a pump of the worm and worm wheel type which, for a given capacity, can be constructed in such small sizes as compared with plunger pumps of equivalent capacity that installations are greatly simplified. Furthermore, a pump of this type will operate successfully with stock of much heavier consistency so that the machine chest can be reduced in size appreciably or, by using the present chest a greater tonnage of stock can be handled and stored, thereby further simplifying installations.

More specifically stated, the pump of my invention comprises a worm of hour-glass shape and a wheel having spur teeth meshing with the thread of the worm, and incorporates the following features of novelty—

(1) A seal member abutting the flat end of the worm and the periphery and opposed faces of that part of the wheel exposed on the discharge or pressure side of the worm, whereby to prevent by-passing of stock to the intake or suction side. Furthermore, the thread of the worm is made to open at one end at the same time that the other end closes, thus effectively sealing the discharge side from the intake side and avoiding water hammer action by virtue of the fact that the stock is not trapped in the thread and subjected to compression.

(2) Clogging and consequent binding of the working parts is avoided, firstly, by having the leading face of each tooth of the wheel at a sharper angle than the trailing face so that stock is never allowed to wedge between the tooth and the sides of the thread of the worm; secondly, by placing the wheel with its one face on the center line of the worm, forwardly with respect to the direction of rotation of the worm, line contact is secured and there is no opportunity for stock to wedge between the worm and the periphery of the teeth of the wheel, and thirdly, by placing the bearing and stuffing box for the driving shaft of the worm on the suction side instead of on the discharge side there is practically no opportunity for stock to enter the stuffing box and result in binding and abrasion of the shaft.

(3) Fouling and consequent breaking or damaging of the working parts is avoided, firstly, by providing a trap on the intake side of the worm to catch wires, bolts, nuts, etc., that may enter the pump with the stock, thus preventing their getting into the worm, and secondly, by facing off the intake end of the thread of the worm both with a view to preventing the wedging of solids in the worm and with a view to causing such solids to be deflected into the trap.

(4) The wheel is preferably of micarta, or any other material of like characteristics from the standpoint of utilizing water as a lubricant, whereby to make for easy running when operating with a worm of manganese bronze or other metal. This combination also offers the advantage that the softer material of the wheel will take whatever damage might result through the entry of solids into the worm, and thus protect the more expensive worm from being damaged.

The invention is illustrated in the accompanying drawings, in which—

Fig. 1 is a view partly in side elevation and partly in longitudinal section of the improved metering pump of my invention;

Fig. 2 is a plan view of Fig. 1;

Figs. 3 and 4 are cross-sections on the correspondingly numbered lines of Fig. 2;

Fig. 5 is an enlarged detail, partly in section and partly in end elevation, of the worm and wheel taken on the line **5**—**5** of Fig. 1;

Fig. 6 is another enlarged detail on the line **6**—**6** of Fig. 5, and

Figs. *7a–c* are diagrammatic views illustrating the relationship of a tooth of the wheel to the sides of the thread of the worm at different points on the worm.

The same reference numerals are applied to corresponding parts throughout the views.

The stock metering pump of my invention is clearly illustrated in Figs. 1–6, wherein it is designated generally by the numeral **28**. It comprises a worm **36** of hour-glass shape and a cooperating gear or wheel **37**, the spur teeth **38** of which have the thread **39** of the worm fitting therein so as to drive the wheel **37** in the direction indicated

by the arrow in Fig. 1, when the worm is turned in the direction indicated by the arrow thereon. The shaft 40 for driving the worm extends into the intake or suction chamber 41 of the pump housing 42 through a gland 43 and stuffing box 44. The parts 43—44 serve principally as a stuffing box since the shaft 40 receives adequate bearing support in the anti-friction bearing 45 that is formed preferably integral with the base part of the pump housing 42. The shaft 40 extends from the end of the bearing 45 for connection with its driving motor. The pump housing has a cylindrical axial bore 46 in which a four-piece bushing 47 is secured as by means of bolts 48 to provide a complemental bore 49 of hour-glass shape for the hour-glass worm 36. A slot 47' between the ends of two parts of the bushing has the wheel 37 extending therethrough for meshing engagement with the worm. The worm is suitably keyed and secured on the shaft 40 between a conical ring 50 on the intake side and a conical hub 51 on the discharge side. The discharge or pressure chamber is designated by the numeral 52. A chamber 53 for the wheel 37 is formed in a two-part housing 54 suitably secured on the pump housing 42 and closing the tops of the suction and discharge chambers 41 and 52 respectively. The wheel 37 is fixed on a cross-shaft 55 received at its outer ends in anti-friction bearings 56 provided on the outside of and spaced from the walls of the housing 54. Stuffing boxes 57 are provided to seal the housing 54 at the two points where the shaft projects therefrom. A seal member 58 is provided in the discharge chamber 52 to prevent return flow of stock to the intake chamber 41 through the wheel chamber 53. The seal 58 is U-shaped in cross-section and encloses that portion of the wheel 37 that would otherwise be exposed in the discharge chamber 52. It has two side walls 59 for engagement with the opposite side walls of the chamber 53 and an end wall 60 for abutment with the adjacent end wall of the chamber 53 to seal the discharge chamber 52 from the chamber 53 at those points. Screws or other fastening means for holding the seal 58 in place in the housing 54 are shown at 61. The sealing off of chamber 53 is completed on the one hand by the engagement of the smooth end 62 of the seal 58 with the flat end 63 of the worm 36, and, on the other hand, by the engagement of smooth flat internal surfaces 64 and 65 on the inside of the seal 58 at the end thereof with the wheel 37, the two opposed surfaces 64 being arranged to have a working fit on the opposed faces of the wheel 37, and the surface 65 being arranged to have a working fit on the outer periphery of the wheel 37. The chamber 53 will, therefore, be kept clear of stock, there being no opportunity for stock to enter from the discharge chamber 52, and there being no danger of stock entering from the intake chamber 41, owing to the contrary direction of rotation of the wheel 37.

In operation, the turning of the worm 36 in the direction indicated in Fig. 1 causes stock to be carried from the intake chamber 41 to the discharge chamber 52, a definite volume for each turn. Positive displacement results from the fact that the teeth 38 of the wheel 37 enter between the turns of the thread 39 and prevent stock from revolving with the worm; all of the stock between the turns of the thread is fed positively in the direction of the discharge chamber. It is this fact which makes the name "metering pump" appropriate—a definite volume of stock is displaced with each revolution, and it is, therefore, merely a matter of driving the worm at a calculated R. P. M. to secure a specified rate of discharge. The fact that the periphery of the thread 39 has a working fit in the bore 49, taken together with the fact that the seal 58 prevents by-passing from the discharge chamber to the intake chamber means a definite operating efficiency, leakage being reduced to a negligible quantity, particularly with paper pulp or any other material of similar consistency. The thread 39 of the worm is of a predetermined length so that the worm opens to the discharge chamber 52 at the one end at the same time that it seals off from the intake chamber 41 at the other end, thus avoiding water hammer action and getting away from the condition of attempting to compress trapped stock, which would be disastrous since the stock is largely of liquid content and substantially incompressible.

Paper stock has a peculiar characteristic of felting or matting solid if subjected to compression slowly, whereas, it shows appreciable "spring back" or resilience upon sudden compression. It is for that reason that faults in the design of a stock pump show up only in the stop and start test; in the stopping if the stock has an opportunity to wedge between the working parts as they slow down and stop, the parts seize and the pump cannot be started again. In the present pump I have, therefore, constructed and arranged the working parts so that there is no opportunity for the stock to wedge between the surfaces thereof at any point, and, as a result, this pump may be stopped and started without any difficulty. One of the non-clogging features is that clearly illustrated in Fig. 5, namely, that of having the wheel 37 placed with its one face on the center line of the worm, forwardly with respect to the direction of rotation of the worm, so that there is line contact at 66 and 67 on the outside diameter and root diameter of the spur teeth 38 of the wheel 37. Surface contact would be out of the question for the reason that the worm 36 is of hour-glass shape and consequently has its surfaces of larger radius at the ends than at the middle, and, if an arcuate surface were provided on the root or outside diameter of the wheel 37 to fit the worm at one point, say, at the middle, it would not jibe at the ends. It is only by placing the wheel 37 with its one face on the center line, that is, with the wheel forward with respect to the direction of rotation of the worm relative to the wheel, that the difficulty of effecting sealing contact between the worm and wheel is overcome, because it is in that one plane where the line contact is secured and in no other plane that the surfaces of the worm and wheel meet in the same way from one end of the worm to the other. The wedge-shaped spaces or "nips" 66' and 67' that are left between the worm and wheel are so situated with relation to the direction of rotation of the worm that stock will not tend to wedge in these spaces but, on the contrary, any stock getting into these spaces tends to get cleared out by reason of the direction of rotation of the worm; consequently there is no danger whatever of seizure at these points. Quite similar considerations entered into arriving at the conclusion that the leading face 68 of each tooth 38 of the wheel 37 has to be of a sharper angle with relation to the plane of the wheel than the trailing face 69, see Figs. 6 and 7*a–c*. In this case, it was also found to be necessary to provide for line contact at the points 70 and 71, that

is, in the same plane with the line contact at **66** and **67**—the plane of the center line of the worm. Surface contact here again is out of the question because of the difference in slopage of the thread **39** of the worm at the ends, as compared with the middle. Fig. 7*b* shows the slant of the thread **39** at the middle of the worm, and Figs. 7*a* and 7*c* show the slant at or near the ends. These figures are, of course, exaggerated to better illustrate the principle of operation and facilitate the explanation. By having the leading face **68** at the sharper angle corresponding to the slant of the thread at the middle of the worm, and the trailing face **69** at the larger angle corresponding to the slope of the thread at the ends of the worms, there is no interference between the teeth and the thread at any point on the worm and there is, nevertheless, line contact for a perfect seal from end to end of the worm. The spaces or nips **68'** and **69'** that are left between the sides of the thread and the faces of the teeth cannot give rise to any trouble by reason of stock wedging therein, because any stock that might happen to enter these spaces is cleared out promptly by reason of the direction of rotation of the thread with relation to the teeth of the wheel; consequently, there is also no danger of seizure at these points for substantially the same reasons as in the case of the spaces **66'** and **67'** previously referred to.

In the production of the paper pulp there is always some likelihood of pieces of baling wire, bolts, nuts, etc., getting into the stock and be drawn with it into the pump. For that reason, I have provided a trap **72** in the intake chamber **41** below the worm **36** to provide a place to pocket heavy solids and thus protect the working parts from damage. A removable closure **73** at one end of the trap closes a hand hole or rake-out opening, and this closure is removed from time to time to clear out the solids caught in the trap. As an additional precaution against getting things caught in the worm, I have formed the intake end ogee-shaped, as shown at **74**, with the peripheral portion **76** substantially radial, so that solid particles have no opportunity to wedge between the thread of the worm and the bore **49** of the bushing **47**. Instead, the chances are favorable that the solid particles will be deflected into the trap **72**.

The wheel **37** is preferably of micarta or some other material which will operate smoothly in connection with a metallic worm when water is relied upon as the lubricant to give smooth operation. The worm is preferably of manganese bronze but many other metals would serve the purpose. Instead of using micarta for the wheel, hard rubber or a phenolic condensation product of phenol and formaldehyde (bakelite) could be used. Aside form affording smooth and easy operation by this combination of a composition material wheel with a metal worm, there is the advantage that the pump is noiseless in its operation, and, what is more important, the softer and less expensive material of the wheel will bear the brunt of the damage in the event solid particles get into the working parts. The wheel can be replaced more conveniently and at much less cost than the worm and will be replaced when sufficiently seriously damaged.

It is believed the foregoing description conveys a good understanding of the objects and advantages of my invention. The appended claims have been drawn with a view to covering all legitimate modifications and adaptations.

I claim:

1. In a pump of the worm and wheel type, a housing having a bore therein to receive the worm, a worm of hour-glass shape rotatable in said bore separating an intake chamber in the housing from a discharge chamber therein, the bore having an hour-glass shaped portion complemental to the hour-glass shape of the worm, a wheel chamber on the pump housing, a wheel therein having spur teeth meshing with the thread of the worm, and a seal member adjacent the discharge end of the worm sealing the wheel chamber from the discharge chamber and enclosing the adjacent portion of the wheel, said seal member having a flat end surface making sealing contact with a flat end surface on the worm, and having opposed flat internal surfaces making sealing contact with the opposite sides of the wheel, and another flat internal surface making sealing contact with the periphery of the teeth of the wheel.

2. A pump comprising in combination, a rotatable worm of hour-glass shape, and a wheel having spur teeth meshing with the thread of the worm, the wheel being disposed with its one side face in a plane passing through the center line of the worm, the leading and trailing faces of the teeth of the wheel having different angles transversely with respect to the plane of the wheel whereby to have line contact at the lateral edges of said teeth with the sides of the thread of the worm in the travel of a tooth from one end of the worm to the other.

3. A pump comprising in combination, a rotatable worm of hour-glass shape, and a wheel having spur teeth meshing with the thread of the worm, the wheel being disposed with its one side face in a plane passing through the center line of the worm, the worm being normally rotated in one direction, and the wheel being disposed forwardly with respect to the direction of rotation of the worm for the purpose described, the leading face of each tooth of the wheel being at a sharper angle transversely with respect to the plane of the wheel than the trailing face, for the purpose described.

4. In a paper pulp pump, a rotary pumping worm of hour-glass shape, and a wheel having spur teeth meshing with the thread of the worm, the wheel being disposed with its one side face in a plane passing through the center line of the worm, the worm being normally rotated in one direction, and the wheel being disposed forwardly with respect to the direction of rotation of the worm for the purpose described, the leading face of each tooth of the wheel being at a sharper angle transversely with respect to the plane of the wheel than the trailing face, for the purpose described.

5. In a pump of the worm and wheel type, a housing having a bore therein to receive the worm, a worm of hour-glass shape rotatable in said bore separating an intake chamber in the housing from a discharge chamber therein, the bore having an hour-glass shaped portion complemental to the hour-glass shape of the worm, a wheel chamber on the pump housing, a wheel therein having spur teeth meshing with the thread of the worm, means for sealing the wheel chamber from the discharge chamber, and a rotary shaft for driving the worm extending from the worm through the intake chamber and from the hous-

ing through a stuffing box provided on the wall of said housing.

6. In a pump of the worm and wheel type, the combination with a flat ended worm, and a wheel having teeth meshed in the thread of the worm, of a seal member enclosing a portion of said wheel at one end of said worm, the seal member having a flat end surface making sealing contact with the flat end of said worm, and having opposed flat internal surfaces making sealing contact with the opposite sides of the wheel, and another flat internal surface making sealing contact with the periphery of the teeth of the wheel.

7. In a pump of the worm and wheel type, a housing having a bore therein to receive the worm, a worm of hour-glass shape rotatable in said bore separating an intake chamber in the housing from a discharge chamber therein, the bore having an hour-glass shaped portion complemental to the hour-glass shape of the worm, a wheel chamber on the pump housing, a wheel therein having spur teeth meshing with the thread of the worm, and a seal member adjacent one end of the worm sealing the wheel chamber from the adjacent one of the intake and discharge chambers and enclosing the adjacent portion of the wheel, said seal member having a flat end surface making sealing contact with a flat end surface on the worm, and having opposed flat internal surfaces making sealing contact with the opposite sides of the wheel, and another flat internal surface making sealing contact with the periphery of the teeth of the wheel.

8. In a pump of the worm and wheel type, a housing having a bore therein to receive the worm, a worm of hour-glass shape rotatable in said bore separating an intake chamber in the housing from a discharge chamber therein, the bore having an hour-glass shaped portion complemental to the hour-glass shape of the worm, a wheel chamber on the pump housing, a wheel therein having spur teeth meshing with the thread of the worm, and a seal member adjacent one end of the worm sealing the wheel chamber from the adjacent one of the intake and discharge chambers and enclosing the adjacent portion of the wheel, said seal member having opposed flat internal surfaces making sealing contact with the opposite sides of the wheel at a point adjacent the end of the worm, and another flat internal surface making sealing contact with the periphery of the teeth of the wheel at a point adjacent the end of the worm.

LLOYD HORNBOSTEL.