CUTTER ASSEMBLY FOR WELL TOOLS

Filed May 29, 1967

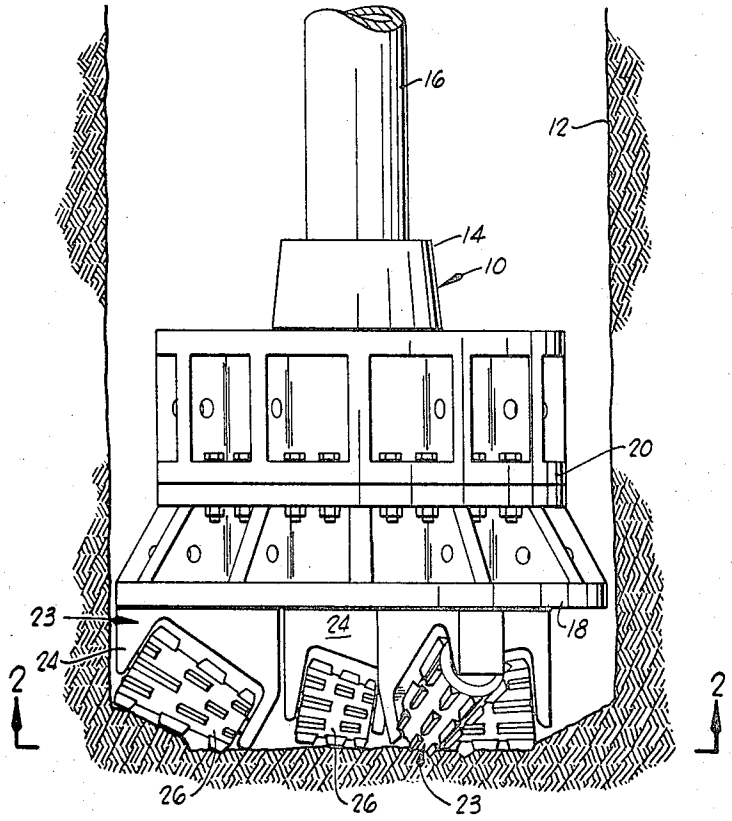

Fig. 1

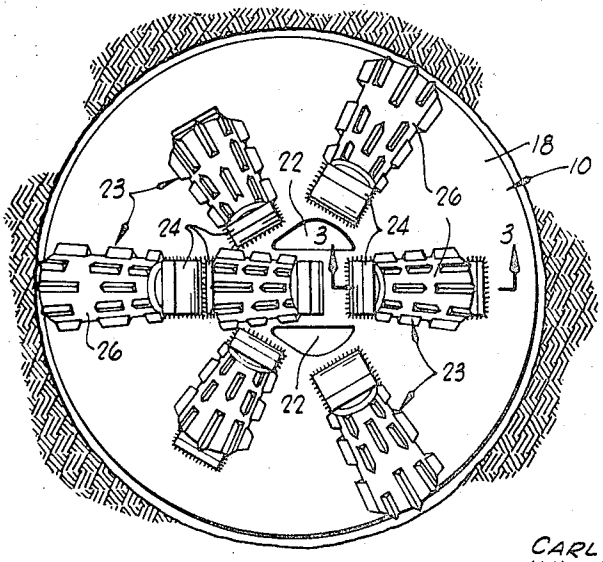

Fig. 2

INVENTORS.
CARL L. LICHTE &
WILLIAM M. CONN
BY Roy L. Van Winkle
ATTORNEY

CUTTER ASSEMBLY FOR WELL TOOLS

Filed May 29, 1967

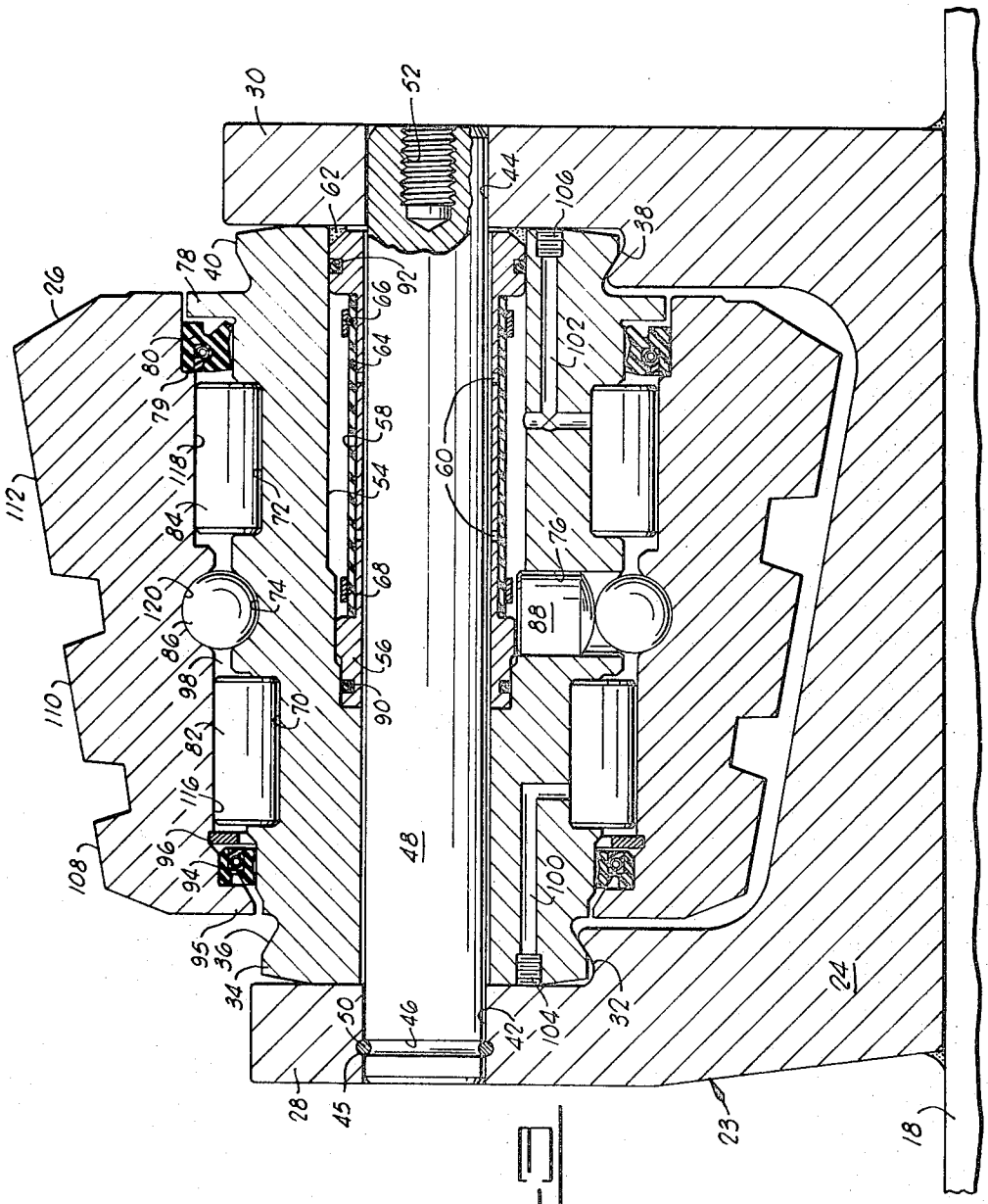

FIG. 3

INVENTORS.
CARL L. LICHTE &
WILLIAM M. CONN.
BY Roy L. Van Winkle
ATTORNEY

United States Patent Office

3,419,093

Patented Dec. 31, 1968

1

3,419,093
CUTTER ASSEMBLY FOR WELL TOOLS

Carl L. Lichte and William M. Conn, Dallas, Tex., assignors to Dresser Industries, Inc., Dallas, Tex., a corporation of Delaware

Filed May 29, 1967, Ser. No. 641,998
9 Claims. (Cl. 175—228)

ABSTRACT OF THE DISCLOSURE

A cutter assembly adapted for use on a well drilling bit or the like and including a cutter member rotatably mounted on a support carried by the bit. The cutting assembly having a chamber formed therein that is substantially filled with a lubricant. The chamber also has a portion of the wall thereof formed by a flexible member that flexes in response to pressure in the well to very the volume of the chamber, whereby the lubricant in the chamber is maintained at a pressure substantially equal to the pressure surrounding the cutter assembly.

Background of the invention

This invention relates generally to improved cutter assemblies for drilling bits used in the drilling of oil or gas wells and the like. More particularly, but not by way of limitation, this invention relates to an improved sealed-bearing cutter assembly for use on a drill bit utilized to drill relatively large diameter well bores.

As is well-know to those skilled in the art of drilling oil wells and the like, the life of the drill bit is an important factor in determining the speed and the cost of the well. Stated in another way, the cost of drilling the well is to a great extent dependent upon the efficiency of the drilling bit. The efficiency of the bit is determined by several factors, for example, the cutting structure of the bit and its effectiveness in penetrating and removing portions of the formation being drilled, the wear characteristic of the cutting structure, and the life of the bearings rotatably mounting the cutting member on the bit.

In recent years, there has been developed a bit incorporating a sealing structure that forms a chamber in which the bearings, journalling the cutting member are confined. Generally, the chamber is filled with a lubricant which serves the purpose of reducing the frictional engagement between the bearing members and the various rotating parts, and, of course, providing some cooling therefor.

Some problems have been encoutered in the use of the sealed-bearing bit structures. For example, despite the lowering of friction in the bearings, friction and, consequently, heat is generated which expands and, perhaps, vaporizes some of the lubricant and forms a relatively high-pressure gas or vapor therein. Such pressure is occasionally of such magnitude that the seals are ruptured or damaged permitting deleterious materials in the environment surrounding the bit to enter the bearings. Once the deleterious materials have entered the bearings, the effectiveness and life of the bearings are drastically reduced.

Another example of the problems that have occurred is that the bit is, as the depth of the well progresses, exposed to relatively high ambient or environmental pressures which may become sufficiently high so that the deleterious material bypasses of forces its way through the seals and enters the bearing structure. When this occurs, and as pointed out above, the bearing life and efficiency are drastically reduced.

Summary of the invention

This invention provides an improved cutter assembly adapted for use on a bit during the drilling of oil or gas wells and the like and includes: a cutter member; mounting means rotatably supporting the cutter member and adapted to mount the cutter assembly on the bit, the mounting means including an annular flexible member responsive to ambient pressure on the cutter assembly; seal means located between the mounting means and cutter member forming a chamber with the flexible means within the cutter assembly; and, a lubricant in the chamber, the lubricant being maintained at a pressure substantially equal to the ambient pressure due to the flexible means in response to changes in the ambient pressure.

2

An object of this invention is to provide an improved cutter assembly having an improved life and efficiency.

Another object of the invention is to provide an improved cutter assembly incorporating means for maintaining pressure within the sealed chamber at substantially the environmental pressure, thereby reducing the possibility of deleterious material entering the bearings.

The foregoing and additional objects of the invention will be come more apparent as the following detailed description is read in conjunction with the accompanying drawings.

Brief description of the drawing

FIGURE 1 is a cross-sectional view of a portion of a well bore having a drilling bit shown in elevation located therein and incorporating cutter assemblies thereon constructed in accordance with the invention.

FIGURE 2 is a view of the bottom of the drill bit illustrated in FIGURE 1 taken generally along the line 2—2 of FIGURE 1.

FIGURE 3 is an enlarged cross-sectional view of a cutter assembly constructed in accordance with the invention and taken along the line 3—3 of FIGURE 2.

Description of the preferred embodiment

Referring to the drawing and to FIG. 1 in particular, shown therein and generally designated by the reference character **10** is a drill bit constructed in accordance with the invention and illustrated as being disposed in a well bore **12**. The drill bit **10** is connected at its upper end **14** with a hollow drill pipe **16** which extends upwardly through the well bore **12** to the surface thereof. Although not shown, it will be understood that the drill pipe **16** is operably connected with a suitable mechanism for raising and lowering the drill pipe **16** and drill bit **10** and for imparting rotation thereto.

The drill bit **10** also includes a bottom plate **18** that is interconnected with the upper end **14** through various structural members generally designated by the referenced character **20**. A pair of openings **22** (see FIG. 2) extend through the bottom plate **18**. The openings **22** are connected by means of a passageway (not shown) that extends upwardly through the drill bit **10** and into fluid communication with the interior of the hollow drill pipe **16**. The openings **22** are provided to permit circulation of drilling fluid downwardly through the drill bit **10** for lubricating and cooling of the bit **10** and for removing cuttings from the bottom of the well bore **12**.

Suitably attached to the bottom plate **18** are a plurality of cutting assemblies **23**. The cutting assemblies **23** each include a supporting member or saddle **24** that is arranged to journal a cutter member **26**. As shown in FIG. 2, the cutter members **26** are of various sizes and configurations and are arranged in spaced relationship on the bottom plate **18** so that they will, during rotation of the bit **10**, engage the entire surface of the bottom of the well bore **12**.

One of the cutter assemblies **23** is shown in more detail in the enlarged cross-sectional view of FIG. 3. As shown therein, the saddle **24** is in the form of a yoke having leg portions **28** and **30**. The leg portion **28** is provided with a semi-circular recess **32** sized and ar-

ranged to receive an enlarged end **34** of a sleeve or shaft member **36**. Similarly, the leg portion **30** is provided with a semi-circular recess **38** that is sized and arranged to receive a second enlarged end **40** of the sleeve member **36**.

Aligned openings **42** and **44** extend transversely through the leg portions **28** and **30**, respectively. The leg portion **28** is provided with an annular recess **45** in the opening **42** which mates with an annular recess **46** formed in a main pin **48** that extends through the aligned openings **42** and **44**. The annular recesses **45** and **46**, when aligned, are arranged to receive a retaining pin **50** that locks the main pin **48** in the saddle **24**.

With the main pin **48** extending through the sleeve member **36**, the ends **34** and **40** engage the saddle **24** to prevent rotation therebetween. The main pin **48** is provided with a threaded interior bore **52** to permit connection between the main pin **48** and a pin puller (not shown). When the pin **48** is removed, the cutting assembly **23** can be quickly and easily disassembled.

The sleeve member **36** has a counterbore **54** formed in one interior end thereof. An annular member **56** is located in the counterbore **54** with its interior disposed adjacent the pin **48**. An annular recess **58** is formed in the medial exterior portion of the annular member **56** and a plurality of ports **60** extend therethrough, providing communication from the interior thereof with the annular recess **58**. The annular member **56** is illustrated as being welded to the sleeve member **36** at **62**, but any desired method can be utilized for connecting the members.

An annular flexible member **64** encircles the recess **58** formed in the annular member **56**. The flexible member **64** is secured to the annular member **56** in any suitable manner, such as by the bands **66** and **68** illustrated in FIG. 3. The flexible member **64** is of sufficient length to cover the ports **60** formed in the member **56** for reasons that will become more apparent hereinafter. Preferably, the flexible member **64** is constructed from a material that is both flexible and resilient and one that is compatible with the environmental conditions existing in the well bore **12**.

The sleeve member **36** is also provided with a roller race **70**, a roller race **72** spaced from the roller race **70**, and a ball race **74** located between the roller races **70** and **72**. A ball pasageway **76** extends from the counterbore **54** into the ball race **74**. An exterior flange **78** encircles the sleeve member member **36** retaining an annular seal **80** that is positioned between the sleeve member **36** and a shoulder **79** on the cutter member **26** forming a seal between the members **26** and **36**.

A plurality of roller bearings **82** are disposed in the roller race **70** between the cutter member **26** and the sleeve member **36** to journal the cutter members **26** thereon. Similarly, a plurality of roller bearings **84** are disposed in the roller race **72**. After the cutter member **26** has been positioned on the sleeve member **36** with the roller bearings **82** and **84** in place, a plurality of ball bearings **86** are inserted through the counterbore **54** in the sleeve member **36** and through the passageway **76** substantially filling the ball bearing race **74**. When the ball bearings **86** are in position, a ball plug **88** is positioned in the passageway **76**. The annular member **56** with the flexible member **64** attached thereto is then inserted into the counterbore **54** and connected thereto as previously mentioned engaging and retaining the ball plug **88** in the pasageway **76**. To be certain that the counterbore **54** is sealed from well fluids, O-ring seals **90** and **92**, which are carried by the annular member **56** near each end thereof, are arranged in sealing relationship between the annular member **56** and the sleeve member **36** in the counterbore **54** spanning the ball plug **88**.

An annular seal **94** is positioned between an inwardly extending flange **95** on the cutter member **26** and the sleeve member **36** near the end **34** thereon forming a seal between the members **26** and **36**. The seals **80** and **94** may be made of any material that will form a seal between the members **26** and **36**. An internal lock ring **96** carried by the cutter member **26** is located between the seal **94** and the roller bearings **82** to prevent movement of the seal **94** against the bearings **82**.

From the foregoing, it will be apparent that a chamber **98** is formed within the cutting assembly **23** by the flexible member **64**, the seal **80**, and the seal **94**. To facilitate filling the chamber **98** with a lubricant, a passageway **100** is provided that extends from the end **34** of the sleeve member **36** into the roller race **70** which is within the chamber **98**. A passageway **102** extends from the end **40** of the sleeve member **36** providing communication into the counterbore **54** outside the flexible member **64**, but within the chamber **98** and also into the roller race **72** within the chamber **98**. Plugs **104** and **106** are removably located in the passageways **100** and **102**, respectively, adjacent the outer ends thereof.

While the cutter member **26** is illustrated as having external cutting teeth **108**, **110**, and **112**, it will of course be understood that various other cutter configurations can be utilized in a cutting assembly constructed in accordance with the invention. Also, the cutter member **26** is provided interiorly with the mating bearing surfaces **116**, **118**, and **120** for receiving the roller bearings **82** and **84** and the ball bearings **86**, respectively.

After the cutter member **26** has been assembled on the sleeve member **36** with the bearings **82**, **84**, and **86** inserted therein and with the annular member **56** positioned in and connected to the sleeve member **36**, lubricant is introduced into the chamber **98**. To accomplish lubrication, the plugs **104** and **106** are removed from their respective passageways **100** and **102**. A lubricant supply is then connected into the passageway **100** and a vacuum pump (not shown) is connected with the passageway **102**. As the pressure is lowered in the chamber **98** by means of the vacuum pump, lubricant is induced through the passageway **100** into the chamber **98**. After filling the chamber **98** with a lubricant, a small quantity of the lubricant is removed through the passageway **102** so that the chamber **98** is less than entirely full. It is desirable to leave the chamber **98** with some unfilled volume due to the change in volume of the lubricant when it becomes heated during operation of the bit **10**.

After the chamber **98** has been filled with the quantity of lubricant desired, the plugs **104** and **106** are replaced in the passageways **100** and **102**. The cutter member **26** and the assembled sleeve member **36** are then positioned in the recesses **32** and **38** of the saddle **24**. The main pin **48** is inserted through the holes **42** and **44** in the leg portions **28** and **30** and through the sleeve member **36**. After the retaining pin **50** is driven into the mating annular recesses **45** and **46**, the cutting assembly **23** is arranged in the assembled condition as illustrated in FIG. 3.

Operation

With the cutting assemblies **23** assembled as previously described, and welded onto the bottom plate **18** substantially as illustrated in FIGS. 1 and 2, the bit **10** is connected with the lower end of the drill string **16** and lowered into the well bore **12** until the cutter member **26** engage the bottom of the well bore **12**. Frequently, the well bore **12** is filled with a drilling fluid, commonly referred to as "mud."

As the bit **10** progresses downwardly into the well bore **12**, the hydrostatic head of the drilling mud increases. The flexible member **64** is subjected to the hydrostatic head or pressure through the ports **60** which extend through the annular member **56**. The pressure deflects the flexible member **64** relatively away from the annular member **56**, thereby exerting pressure on the lubricant in the chamber **98** to compensate for the hydrostatic pressure exerted on the seal **80** and **94** so that the pressure on the lubricant in the chamber **98** remains substantially equal to the hydrostatic pressure even though the hydro-

static pressure is constantly increasing as the bit **10** is lowered into the well bore **12**.

When the bit **10** has reached the bottom of the well bore **12**, the drill pipe **16** is rotated, rotating the drill bit **10** therewith. As the teeth of the cutter members **26** engage the bottom of the well bore **12**, the members **26** rotate about the bearings **82**, **84**, and **86**, bringing the cutting teeth **108**, **110** and **112** into engagement with the bottom of the well bore **12** and disintegrating the formation as is well known in the well drilling art.

Even though lubricant is present in the chamber **98** surrounding the bearings, some friction occurs therein which results in heating of the bearings and the surface area in contact therewith so that the lubricant in the chamber **98** also becomes heated. As the temperature of the lubricant increases, the volume of the lubricant increases and exerts a pressure relatively outwardly on the seal **80** and **94** and the flexible member **64**. The flexible member **64** is deflected relatively toward the annular member **56** thereby increasing the volume of the chamber **98**. The volume of the chamber **98** increases sufficiently to maintain the pressure within the chamber **98** at a magnitude substantially equal to the hydrostatic pressure exerted by the drilling mud, thereby avoiding the possible destruction of or damage to the seals **80** and **94** by an untoward differential pressure being exerted thereon.

As the bit **10** rotates, some axial movement of the cutter member **26** relative to the sleeve member **36** can take place. Such movement may occur due to manufacturing tolerances and wear in the bearings and bearing races.

If the cutter member **26** moves to the left, as seen in FIG. 3, the volume of the chamber **98** increases slightly thereby lowering the pressure in the chamber **98**. To compensate for the decrease in pressure and increase in chamber volume, the environmental pressure, acting through the ports **60**, deflects the flexible member **64** away from the annular member **56**, thus decreasing the chamber volume and maintaining the chamber pressure substantially equal to the environmental pressure.

If the cutter member **26** moves to the right, as seen in FIG. 3, the volume of the chamber **98** decreases with a consequent increase in chamber pressure. The flexible member **64** is moved toward the annular member **56** by the increase in chamber pressure, thereby increasing the chamber volume and reducing the chamber pressure to maintain the chamber pressure substantially equal to the environmental pressure.

As previously described, the ball plug **88** is spanned by the O-ring seals **90** and **92**, and is therefore located within the chamber **98**. With the plug **88** in the chamber **98**, the plug **88** is in a balanced condition with respect to pressure forces exerted thereon and remains stationary within the ball passageway **76**. The importance of such a feature can be appreciated when it is realized that ball plugs used in prior cutter assemblies were situated with one end adjacent the main pin and exposed to environmental pressure while the opposite end was in the lubricant chamber and exposed to chamber pressure. Differentials in pressure occuring between the environment and chamber resulted in movement of the ball plug which often caused damage to or excessive wear on the ball bearings as the cutter members rotate during drilling with such bits.

The flexible member **64** also provides an important function when the drill bit **10** is being removed from the weel bore **12**. As would be expected, the hydrostatic pressure constantly decreases as the bit **10** is pulled out of the well bore **12**. As the pressure decreases, the flexible member **64** moves toward the annular member **56** providing more volume in the chamber **98** so that the pressure in the chamber **98** decreases as the hydrostatic pressure decreases. Obviously, if a relatively high hydrostatic pressure were trapped in the chamber **98** when the bit is near the bottom of the well bore **12**, the decrease in hydrostatic pressure exteriorly of the chamber **98** would result in a high differential pressure across the seals **80** and **94** which could result in the rupture or extrusion of the seals which would at least require their replacement before the drill bit **10** can be returned into the well bore **12**.

In summary, it can be seen that the provision of the variable volume chamber of relatively large capacity in the cutting assembly **23** provides a more efficient and longer life bit **10** since the seals are less susceptible to damage and thus the bearings are lubricated adequately even though the bit **10** is exposed to varying pressure conditions due to hydrostatic head changes, expansion or contraction of the lubricant resulting from heat generated during operation of the bit, and possibly, from axial movement of the cutter member during drilling.

It will also be appreciated that the structure described hereinbefore for providing the variable chamber is useful in various forms of relatively rotating members which must be lubricated and utilized in well bores and the like even though the foregoing description has related primarily to a cutter assembly for big-hole bits. Manifestly, such a structure can be utilized to advantage in reamer-type cutters and, if space is available, in other forms of bit cutter assemblies.

Having described but a single embodiment of the invention, it will be understood that it is presented by way of example only and that various changes and modifications can be made thereto without departing from the spirit of the invention or from the scope of the annexed claims.

What we claim is:

1. In a cutter assembly adapted for use on a bit during the drilling of oil or gas wells and the like:

a cutter member;

mounting means rotatably supporting said cutter member and adapted to mount said cutter assembly on the bit, said mounting means including annular flexible means responsive to pressure in the well;

seal means located between said mounting means and cutter;

member forming a chamber with said flexible means within said cutter assembly; and,

a lubricant in said chamber, said lubricant being maintained at a pressure substantially equal to the ambient pressure on said cutter assembly due to the flexure of said flexible means in response to changes in the ambient pressure.

2. The cutter assembly of claim **1** and also including:

bearing means disposed between said cutter member and mounting means; and, wherein

said seal means includes a pair of annular seal members, one of said seal members being located between one end of said cutter member and bearing means and the other seal member being located between said bearing means and the other end of said cutter member.

3. The cutter assembly of claim **1** wherein said mounting means also includes:

an annular member having an interior exposed to the ambient pressure, an annular recess in the exterior thereof, and a port extending therethrough providing communication from the interior thereof into said recess;

said annular flexible means encircling said recess and connected with said annular member covering said port, whereby said flexible means is exposed to the ambient pressure through said port; and,

a sleeve member encompassing and connected to said annular member.

4. The cutter assembly of claim **3** and also including:

bearing means located between said sleeve member and cutter member to permit relative rotation therebetween; and, wherein

said seal means includes a pair of annular seal members disposed between said cutter member and sleeve

member, one of said seal members being located between said bearing means and one end of said cutter member and the other seal member being located between said bearing means and the other end of said cutter member.

5. The cutter assembly of claim 4 wherein said sleeve member has:

a first passageway extending therethrough, into communication with said chamber, whereby said lubricant can be introduced therein;

first closure means removably located in said first passageway;

a second passageway extending therethrough into communication with another portion of said chamber, whereby said chamber can be vented to permit substantially complete filling of said chamber with said lubricant; and,

second closure means removably located in said second passageway.

6. In a cutter assembly adapted for use on a bit during the drilling of oil or gas wells and the like:

a main pin adapted to be mounted on the bit;

a mandrel assembly encircling a portion of said main pin and including

a substantially rigid annular member disposed on said shaft having an annular recess in the medial exterior portion thereof and at least one port extending through said medial portion into said recess, and,

a resilient tubular member encircling said recess and covering said port, said tubular member having end portions connected with said annular member and being exposed to ambient pressure on the cutter assembly through said port;

a sleeve member encompassing and connected to said mandrel assembly;

an annular cutter member disposed over said sleeve member;

bearing means located between said sleeve member and cutter member to permit relative rotation therebetween;

seal means located between said sleeve member and cutter member to prevent the entrance of deleterious material into said bearing means and forming a lubricant chamber with said tubular member in said cutter assembly; and,

a lubricant in said chamber, said lubricant being maintained at a pressure substantially equal to the ambient pressure due to the flexure of said resilient tubular member in response to changes in the ambient pressure.

7. The cutter assembly of claim 6 wherein:

said bearing means includes a plurality of ball bearings;

said sleeve member includes a ball passageway extending therethrough within said chamber to permit insertion of said ball bearings; and

said cutter assembly also includes a ball plug located in said ball passageway in engagement with said substantially rigid annular member, to retain said ball bearings in place, said ball plug being located within said chamber.

8. In a cutter sub-assembly adapted for use on a well drilling bit or the like, the bit including means supporting the cutter sub-assembly, said cutter sub-assembly including:

a cutter member;

a sleeve member journalling said cutter member and having a counterbore therein, said sleeve member being arranged to be connected with the means supporting the cutter sub-assembly on the bit;

an annular member located in said counterbore and having at least one port extending through the medial portion thereof;

an annular flexible means encircling and connected to said annular member covering said port, whereby said flexible means is exposed to ambient pressure through said port;

seal means located between said sleeve member and cutter member forming a chamber with said annular flexible means within said cutter sub-assembly; and,

a lubricant in said chamber, said lubricant being maintained at a pressure substantially equal to the ambient pressure on said cutter sub-assembly due to flexure of said flexible means.

9. The cutter sub-assembly of claim 8 and also including:

a plurality of ball bearings disposed between said cutter member and sleeve member;

a ball passageway extending through said sleeve member from said counterbore to permit insertion of said ball bearings;

a ball plug located in said ball passageway; and,

a pair of spaced seals between said annular member and sleeve member spanning said ball plug, whereby said ball plug is located within said chamber.

References Cited

UNITED STATES PATENTS

2,187,037	1/1940	Kirkpatrick	308—8.2
2,595,903	5/1952	Swart	308—8.2
3,048,230	8/1962	Angel	175—228
3,230,019	1/1966	Kotch et al.	175—228 X

ERNEST R. PURSER, *Primary Examiner.*

U.S. Cl. X.R.

175—372, 376; 308—8.2

UNITED STATES PATENT OFFICE

CERTIFICATE OF CORRECTION

Patent No. 3,419,093 December 31, 1968

Carl L. Lichte et al.

It is certified that error appears in the above identified patent and that said Letters Patent are hereby corrected as shown below:

Column 6, lines 39 to 42, cancel:
"seal means located between said mounting means and cutter; member forming a chamber with said flexible means within said cutter assembly;
and,"
and insert -- seal means located between said mounting means and cutter member forming a chamber with said flexible means within said cutter assembly; and, -

Signed and sealed this 14th day of April 1970.

(SEAL)
Attest:

Edward M. Fletcher, Jr.
Attesting Officer

WILLIAM E. SCHUYLER, JR.
Commissioner of Patents