US 20140000639A1

(19) **United States**

(12) **Patent Application Publication**

Toss

(10) **Pub. No.: US 2014/0000639 A1**

(43) **Pub. Date: Jan. 2, 2014**

(54) **THIMBLE-LIKE NAIL FILE**

(71) Applicant: **Vivian Toss**, Brooklyn, NY (US)

(72) Inventor: **Vivian Toss**, Brooklyn, NY (US)

(73) Assignee: **Vivian Toss**, Brooklyn, NY (US)

(21) Appl. No.: **13/790,238**

(22) Filed: **Mar. 8, 2013**

Related U.S. Application Data

(60) Provisional application No. 61/609,351, filed on Mar. 11, 2012.

Publication Classification

(51) **Int. Cl.**
A45D 29/04 (2006.01)

(52) **U.S. Cl.**
CPC ***A45D 29/04*** (2013.01)
USPC **132/76.4**

(57) **ABSTRACT**

A thimble-shaped tool and a textured surface designed to be used as a nail file. It uses the thumb of one hand to file the nails of the fingers on the same hand. The thimble-shaped tool may be designed to fit over a portion of a thumb or a portion of a finger.

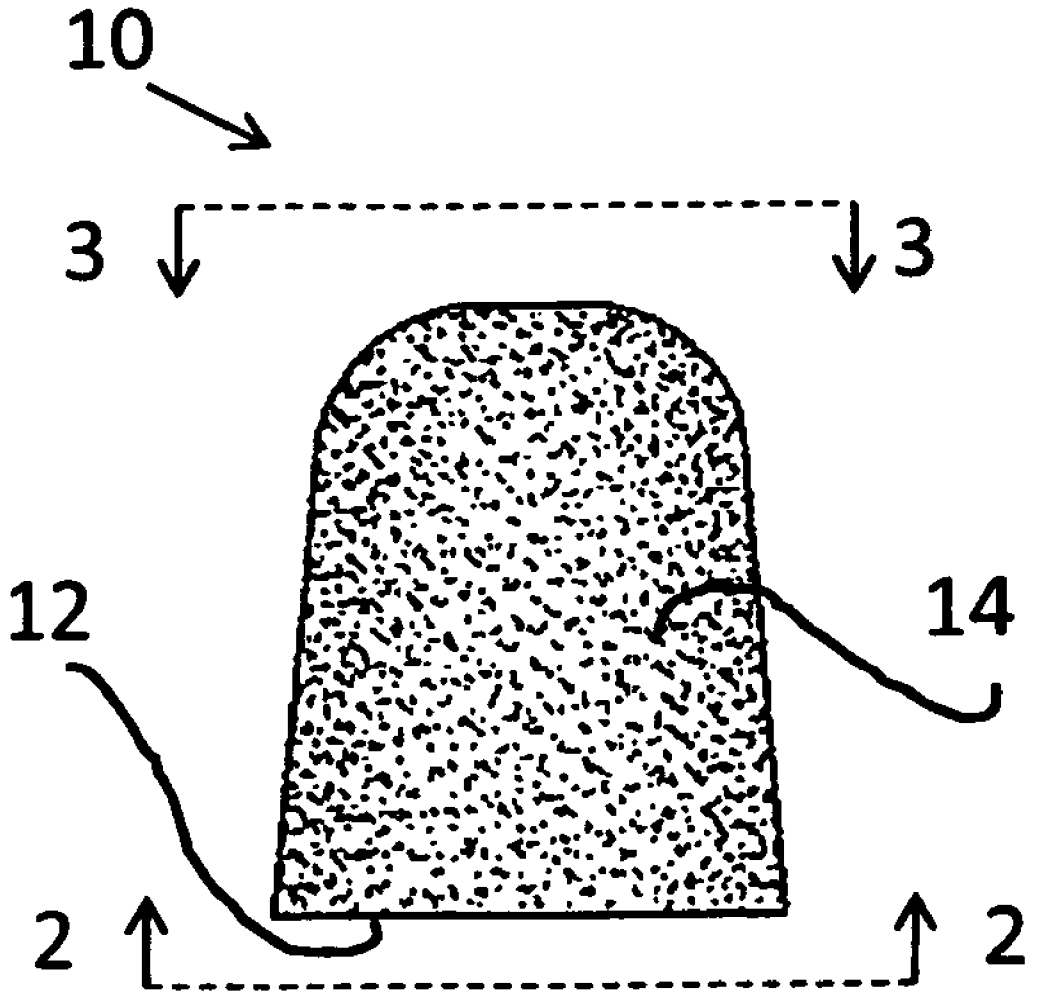

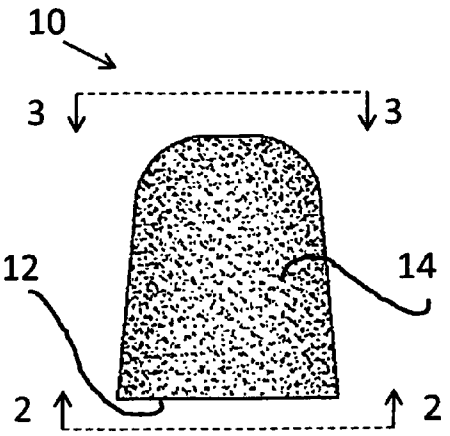

Figure 1

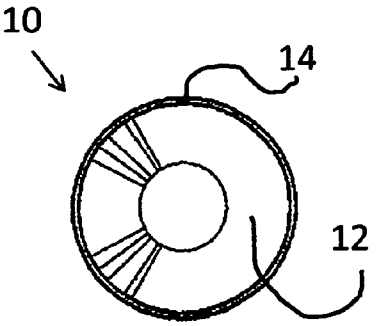

Figure 2

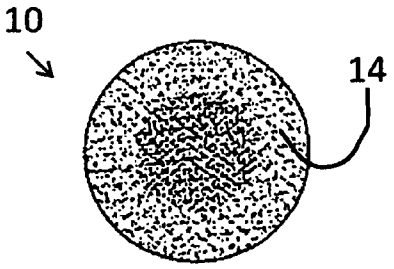

Figure 3

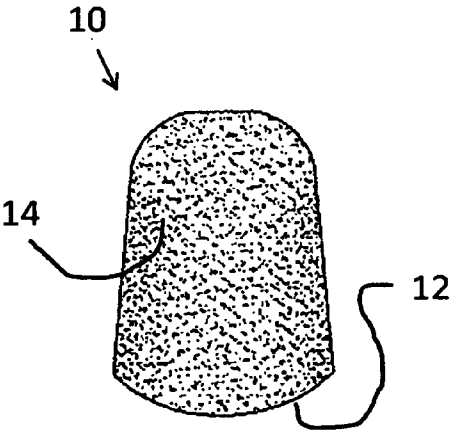

Figure 4

THIMBLE-LIKE NAIL FILE

BRIEF DESCRIPTION OF THE DRAWINGS

[0001] FIG. **1** is a plan view of a nail apparatus according to one embodiment of the present invention;

[0002] FIG. **2** is a view through line **2-2** of FIG. **1**;

[0003] FIG. **3** is a view through line **3-3** of FIG. **1**; and

[0004] FIG. **4** is a perspective view of the apparatus of FIG. **1**.

DETAILED DESCRIPTION OF THE INVENTION

[0005] The following detailed description is of the best currently contemplated modes of carrying out exemplary embodiments of the invention. The description is not to be taken in a limiting sense, but is made merely for the purpose of illustrating the general principles of the invention, since the scope of the invention is best defined by the appended claims.

[0006] Broadly, an embodiment of the present invention generally provides a nail file apparatus. Embodiments of the present invention may comprise thimble-shaped tools designed to be used as nail files. Much nail filing today is done with one person giving another person a manicure. However, nail filing one's own nails is still practiced by many people. Giving oneself a manicure requires that person to use both of their hands. The present invention provides to a novel apparatus for filing one's nails in an easier, faster and more discrete way. An embodiment of the present invention, which may be called "thumbz", may be a nail filing device that primarily uses the thumb of one hand to file the nails of the fingers on the same hand.

[0007] An apparatus **10** according to an embodiment of the present invention is shown in FIGS. **1-4**. The apparatus **10** may include a thumb guard member **12** and a textured surface **14** in contact with at least a portion of the thumb guard member **12**.

[0008] The thumb guard member **12** may comprise a thimble-shaped structure. The thumb guard member **12** may be designed to fit over at least a portion of a thumb (not shown). For some embodiments, the thumb guard member **12** may be designed to fit over a portion of a finger (not shown).

[0009] For some embodiments, the thumb guard member **12** may comprise a metal, such as stainless steel or a malleable alloy. For some embodiments, the thumb guard member **12** may comprise a plastic, cardboard or other material.

[0010] The textured surface **14** may cover at least a portion of the thumb guard member **12**. For some embodiments, the textured surface **14** may cover the outward facing surface of the thumb guard member **12**. The outward facing surface may comprise the surface facing away from a thumb during operation of the apparatus **10**.

[0011] The textured surface **14** may comprise a rough, sandpaper type texture. For some embodiments, the textured surface **14** may comprise an abrasive, such as emery. For some embodiments, the textured surface **14** may comprise a flexible strip of cardboard coated in a hard ground mineral. For some embodiments, the textured surface **14** may comprise etched metal. For some embodiments, the textured surface **14** may comprise sandpaper. The textured surface **14** may be designed to be used for filing nails.

[0012] For some embodiments, the textured surface **14** may be integral to the thumb guard member **12**. For example, for embodiments wherein the thumb guard member **12** comprises a metal, the textured surface **14** may comprise metal etching.

[0013] For some embodiments, the textured surface **14** may be attached to the thumb guard member **12**. For some embodiments, the textured surface **14** may be affixed to the thumb guard member **12** using glue. For example, for embodiments wherein the textured surface **14** comprises a flexible strip of cardboard coated in a hard ground mineral, the textured surface **14** may be glued to the thumb guard member **12**.

[0014] The way a person would use the present invention may be very simple. The person would place the thimble-like nail file (apparatus **10**) over their thumb and begin to file each finger nail on the same hand. The person can use a smaller size thimble-like nail file and place it over the index finger to file the thumb nail.

[0015] Embodiments of the present invention may provide a solution to two hand nail filing. The thimble-like tool (apparatus **10**) can cover the thumb while the metal etching, or extremely hard ground mineral, enable the thumb to file the finger nail. The thumb of one hand can be used to file the nails of the fingers on the same hand.

[0016] A standard nail file uses one hand to file the nails on the opposite hand; wasting time and energy. Embodiments of the present invention make it possible to file the nails of both hands at the same time. The standard nail file, as it is currently used, is both cumbersome and inefficient. When a person is filing their nails, they cannot be doing anything other than filing their nails. With embodiments of the present invention, a person can file their nails with one hand while keeping their other hand free.

[0017] It should be understood, of course, that the foregoing relates to exemplary embodiments of the invention and that modifications may be made without departing from the spirit and scope of the invention as set forth in the following claims.

We claim:

1. An apparatus comprising:

a thumb guard member; and

a textured surface in contact with at least a portion of said thumb guard member, said textured surface designed for filing nails.

* * * * *