Oct. 5, 1965 P. E. CARY 3,210,510

INDUCTOR WITH ANTI-JAM FEATURE

Filed Dec. 31, 1962 2 Sheets-Sheet 1

Fig. 1.

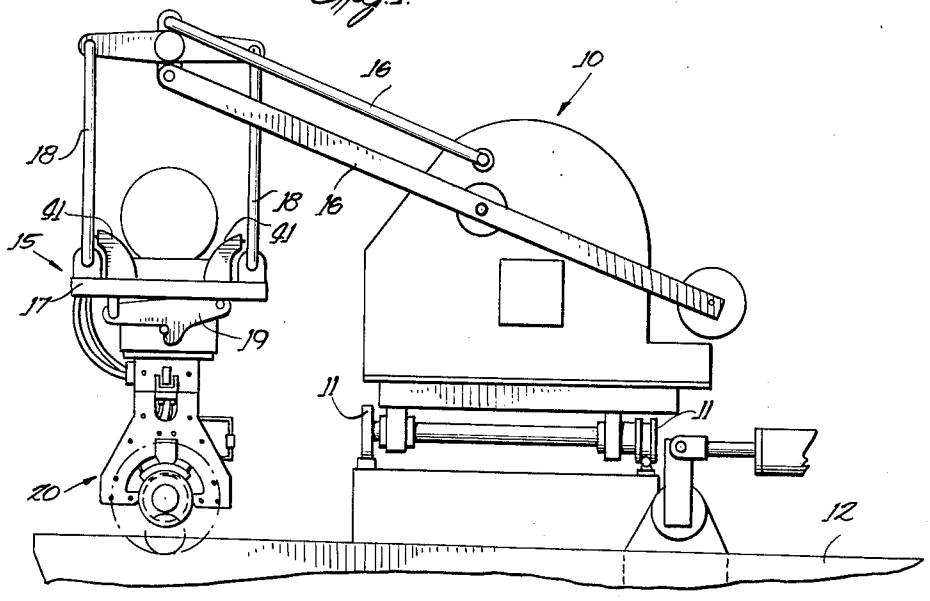

Fig. 2.

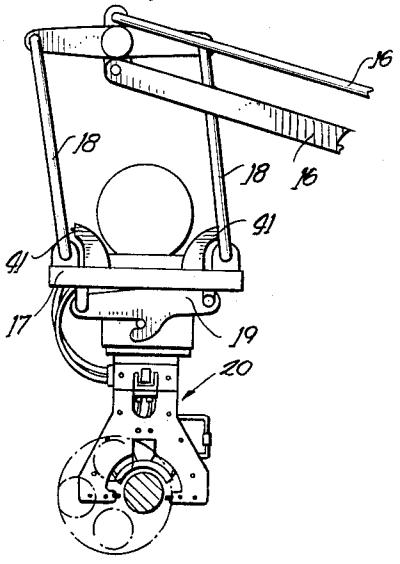

Fig. 3.

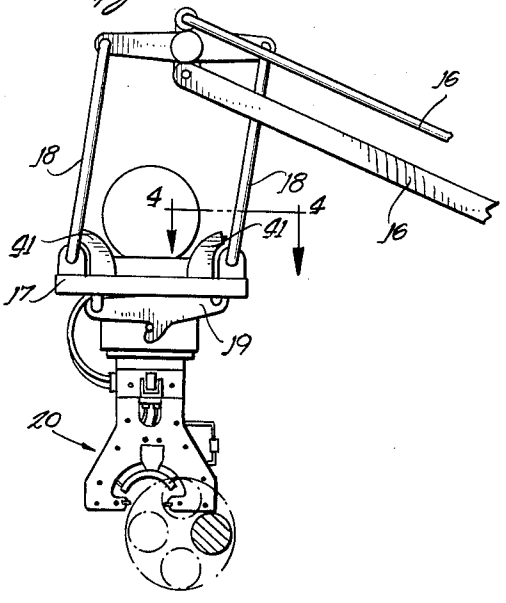

Fig. 4.

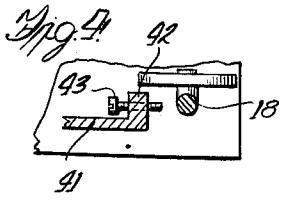

Inventor
Philip E. Cary
Attorney

Oct. 5, 1965 P. E. CARY 3,210,510

INDUCTOR WITH ANTI-JAM FEATURE

Filed Dec. 31, 1962 2 Sheets-Sheet 2

Fig. 9.

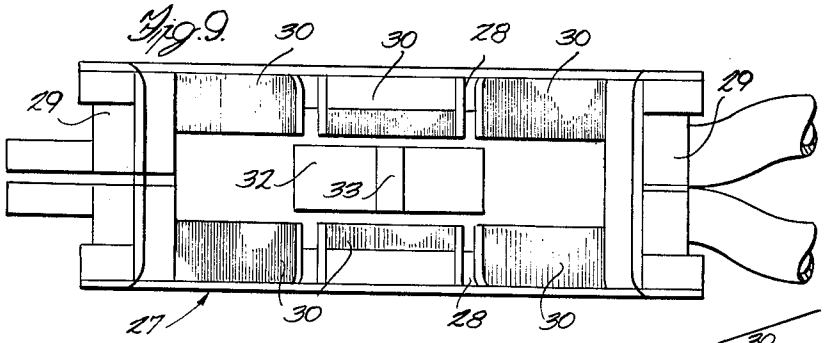

Fig. 10.

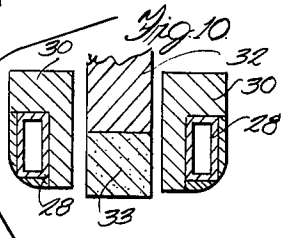

Fig. 5.

Fig. 6.

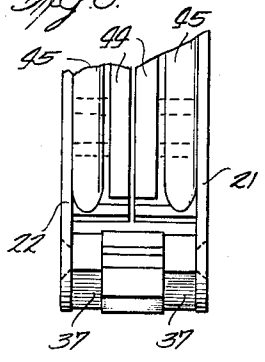

Fig. 7.



Fig. 8.

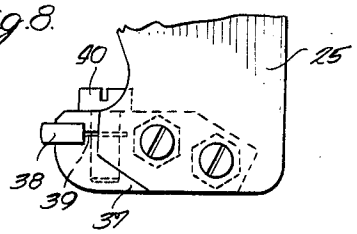

Inventor
Philip E. Cary
Attorney

United States Patent Office

3,210,510

Patented Oct. 5, 1965

3,210,510

INDUCTOR WITH ANTI-JAM FEATURE

Philip E. Cary, Joliet, Ill., assignor to International Harvester Company, Chicago, Ill., a corporation of New Jersey

Filed Dec. 31, 1962, Ser. No. 248,660
4 Claims. (Cl. 219—10.43)

This invention relates in general to induction heating apparatus, and more particularly to improvements in induction heating apparatus which is used to surface harden desired portions of crankshafts and like articles.

In the past it has been well known to mount an inductor, having a jaw-like opening containing the heating element, on a carriage which is movably suspended over a quenching medium. The heating element of such apparatus has usually consisted of two spaced apart series connected coils which are positioned in the jaw-like opening of the inductor. Conventionally such apparatus has also included positioning means located between the two coils, and also adjacent the end portion of each coil. The aforedescribed apparatus is typified by that shown in the United States Patent to G. Seulen et al. No. 2,743,345. While such apparatus has in general functioned satisfactorily to achieve the desired purpose, several serious disadvantages have been encountered. For example, since the inductor leg portions surrounding the jaw-like opening are relatively narrow at their lower ends, often when attempting to position the inductor upon a crank throw bearing, the inductor will be lowered in front of the revolving crankshaft so that the crankshaft will contact the side of the inductor and damage it. It is therefore a principal object of the present invention to prevent damage to the inductor when it is being lowered onto a rotating pin bearing. To attain this, the present invention contemplates the provision of means for limiting the lateral movement of the inductor in combination with the presentation of a wear resistant inductor contact area so that the inductor will be swung vertically upwards upon contact with the crankshaft without damage.

A further problem encountered in the use of prior art inductors having spaced apart series connected coils has been the difficulty of modulating current flow to uniformly heat a given shaft area, which is often desirable. To obviate this difficulty, the present invention proposes to provide a single loop coil heating element which overcomes the deleterious heating effect of the space between the pair of coils of prior art inductors. It is an additional object of the present invention to provide such a single loop coil with a guide member positioned in the center of the coil, which will positively locate the workpiece in proper heating relation with the coil.

Still another difficulty noted in the use of prior art apparatus has been a tendency for one pair of side plates of the inductor to overheat due to heat imparted to them by the rotating crank throw as it passes thereby. Accordingly, it is a still further object of the invention to provide a cooling means on one pair of inductor side plates to dissipate the aforementioned heat.

These and other objects will hereinafter become more fully apparent from an examination of the following description of the annexed drawings wherein:

FIG. 1 is a front elevational view of the induction heating apparatus of the present invention, showing the inductor positioned in heating relation upon the main bearing portion of a crankshaft;

FIG. 2 is a fragmentary view similar to FIG. 1 showing the inductor positioned in heating relation upon a crankshaft throw pin;

FIG. 3 is a view similar to FIG. 2 showing the inductor just prior to being positioned upon the crankshaft throw pin;

FIG. 4 is a sectional view taken along the line 4—4 of FIG. 3;

FIG. 5 is a fragmentary view on an enlarged scale, of the inductor of the present invention;

FIG. 6 is a view taken along the line 6—6 of FIG. 5;

FIG. 7 is a detail view of one embodiment of the clamping means for the center guide member;

FIG. 8 is a fragmentary detail view of a second embodiment of the side guide members;

FIG. 9 is a bottom plan view of the coil structure set forth in FIG. 5; and

FIG. 10 is a sectional view taken along the line 10—10 of FIG. 5.

Referring now to the drawings, wherein like reference characters designate like or corresponding parts throughout the several views, reference numeral **10** is used in FIG. 1 to indicate a carrier in its entirety. Carrier **10** is movably supported by wheels **11**, which enable the carrier to move in a fore-and-aft direction with respect to the quenching medium container **12**, over which it is suspended. An inductor assembly indicated generally at **15**, is mounted for swinging movement in a substantially vertical plane with respect to carrier **10** by links **16** which are pivotally connected to inductor assembly **15** and carrier **10** respectively. Inductor assembly **15** includes a platform **17** which is connected to links **16** by parallel links **18**, which cooperate to form a pantograph structure. Securing means **19** are provided on the bottom of platform **17** to firmly affix inductor **20** into the inductor assembly.

With particular reference to FIG. 5 and FIG. 6, it will be noted that inductor **15** is formed essentially of two spaced apart plates **21** and **22**. Plates **21** and **22** are retained in their desired spaced apart position by a plurality of spacer members **23**. Each plate includes a pair of spaced apart leg members **24** and **25**, which define therebetween a mouth-like opening **26**. As is well known in the art, plates **21** and **22** may be formed of any suitable non-magnetic material, such as brass or the like.

Arcuate heating means **27** are provided in opening **26** adjacent the apex thereof, and as best seen in FIG. 9, heating means **27** comprises a single loop coil having spaced apart side conductors **28** and transversely extending cross bars **29**. As is well known in the art, conductors **28** and **29** are formed of a tubular construction and are adapted to receive the flow of a cooling medium therethrough to dissipate the heat generated by the flow of current through the conductors. Laminations **30** are provided in appropriate positions to insure the application of heat to the desired portions of the workpiece.

In order to position the workpiece in proper heating relation with respect to heating means **27**, a central guide member **32** is mounted between side plates **21** and **22**. In the embodiment illustrated in FIG. 5, FIG. 9 and FIG. 10, an insert **33** is removably wedged in an opening formed in the lower portion of member **32**. Obviously inserts **33** must be formed from a wear resistant material because of the extended periods of contact with the workpiece. It is also desired that the inserts be formed of a non-conductive material, so as to prevent arcing between the workpiece and the insert, which ultimately results in acceleration of the deterioration of the insert. It has been found that inserts formed of a ceramic material have functioned exceptionally well in both of the aforementioned categories.

A second embodiment of the center guide means is shown in FIG. 7. Member **32** is provided at its lower portion with a pair of spaced apart legs **34** and **35** which removably receive the insert **33** therebetween. A bolt **36** is provided in a transversely extending threaded hole in member **32** to securely clamp insert **33** between legs **34** and **35**. It will be noted that insert **33** is readily re-

movable by merely loosening bolt **36**. Furthermore, insert **33** is susceptible of vertical adjustment by merely loosening bolt **36**, repositioning insert **33** at the desired location, and tightening bolt **36** to securely clamp insert **33** between leg portions **34** and **35**.

Inductor **20** is further provided with side guide members **37** which are bolted to plates **21** and **22**, and which extend inwardly into opening **26** from the end portion of legs **24** and **25** respectively. Guide members **37** are preferably formed of a wear resistant material, such as stainless steel or the like, to absorb impact loads imparted to leg portions **24** and **25** when the inductor is positioned upon the workpiece. In the embodiment illustrated in FIG. 5, workpiece-engaging inserts **38** are brazed onto the end portions of guide members **37**, however, if it is desired to facilitate the removal of the insert from the guide member, the rearwardly extending end of the insert may be provided with an apertured tab **39** through which a bolt **40** is received to enable the insert **38** to be readily removed from the guide member, as is shown in the embodiment illustrated in FIG. 8. A non-conducting ceramic material for the guide members or inserts has been used to prevent arcing, but other materials such as tungsten carbide, stellite, or stainless steel may be used.

Referring now to FIG. 1 to FIG. 3, it will be noted that the workpiece being hardened is a crankshaft. As is known in the prior art, means, not shown, are provided for rotating the crankshaft about the axis of its main bearings. Great difficulty has arisen in positioning the inductor upon the crankshaft pin bearings due to the relatively narrow leg portions provided on prior art inductors. Commonly, when attempting to place the prior art inductors upon a rotating crankshaft, the inductor will be dropped in front of the rotating shaft and the throw will strike the side of the inductor and damage it. To prevent this the present invention proposes to utilize an inductor having substantially widened leg portions, so that the rotating crankshaft throw will strike the bottom of the inductor rather than the side. It has been found that the overall width of the inductor base should be sufficient to dispose its outermost edge in substantial vertical alignment with the center line of the rotating crank pin. In this way, as is best seen in FIG. 3, the crank pin will strike the lower edge of the inductor and force it upward.

To insure that the inductor will swing in a generally vertical plane only, stop means are provided to limit the lateral movement of the inductor. In the illustrated embodiment upright members **41** are fixedly mounted upon platform **17**. As is seen in FIG. 4, members **41** are positioned adjacent links **18** so that as inductor **20** swings away from or toward carriage **10**, links **18** will contact members **41** and prevent further lateral movement of the inductor **20**. In this respect FIG. 2 and FIG. 3 show the inductor **20** having swung the maximum lateral distance toward and away from carrier **10** respectively. With reference to FIG. 4, it will be observed that member **41** may be provided with a right angle flange **42** which is suitably apertured to accommodate bolt **43**. Bolt **43** may be threadably adjusted to any desired position with respect to links **18** to provide a variable location stop means for the links **18**. In this manner the apparatus is rendered capable of accommodating crankshafts of different sizes.

It has been found that as a bearing area of the crankshaft is being heated the large amount of heat concentrated in the coil vicinity causes adjacent crankshaft areas to reach an elevated temperature. When the crankshaft is rotated in a counter-clockwise direction, as viewed in FIG. 5, the heated crankshaft areas pass in close proximity to plates **21** and **22** of leg **24**, and as a result plates **21** and **22** of leg **24** are also raised to an elevated temperature, and subsequently deteriorate more rapidly than plates **21** and **22** of leg **25**. As mentioned hereinbefore, conductors **29** and **30** are formed of a hollow construction, and are adapted to receive the flow of a cooling fluid which is conveyed from a suitable source by inlet pipes **44** into one end of the conductors. It is the usual practice in known devices to merely exhaust the cooling fluid into the atmosphere as it emerges from the opposite end of the conductors. To prolong the life of leg **24**, the present invention proposes to provide cooling means for leg **24** by conveying the cooling fluid from its point of emergence from the conductors, over to and past plates **21** and **22** of leg **24**. In this respect it should be noted in FIG. 5 that instead of being exhausted into the atmosphere, coolant exhaust pipes **45** make an inverse bend at **46**, and extend rearwardly where they are soldered to the inner faces of plates **21** and **22** in the form of a loop **47** which covers a large portion of leg **24**. The passage of coolant through loop **47** effectively retains leg **24** at a low enough temperature to prevent warpage or any other adverse heat effect.

Thus is is believed that the objects of the invention have been fully achieved and that the modification may be made without departing from the spirit of the invention as disclosed or from the scope thereof as defined in the appended claims.

What is claimed is:

1. Induction heating apparatus comprising: a frame, a carriage assembly movably mounted on said frame, an inductor adapted to heat a workpiece to a predetermined temperature, linkage means swingably connecting said inductor to said carriage, said inductor having a pair of leg portions depending therefrom and defining therebetween a mouth-like opening, heating means operatively associated with said inductor and positioned within said opening, said heating means including an arcuately shaped single loop coil located adjacent the closed end of said opening, positioning means on said inductor and adapted to locate the workpiece in proper heating relation with respect to said coil, said positioning means including a first insert removably mounted on said inductor at the closed end of said opening and extending through the center of said coil into said opening, and stop means engageable with said linkage to limit the swinging movement of said inductor with respect to said carriage.

2. The invention set forth in claim **1** wherein cooling means are associated with at least one of said inductor leg portions.

3. Induction heating apparatus adapted to heat the bearing surfaces of a rotating crankshaft having offset pin bearings comprising: a frame, a carriage assembly movably mounted on said frame, an inductor adapted to heat said pin bearing surfaces to a predetermined temperature, said inductor having spaced apart leg portions for straddling said pin bearing in a heating position, one of said legs having a width which in an out-of-the way non-heating position is sufficient to dispose the outermost edge of said leg in substantial vertical alignment with the pin bearing and linkage means swingably conecting said inductor to said carriage for movement in a heating position of said inductor vertically and horizontally in response to eccentric rotation of said pin bearing.

4. The invention in accordance with claim **3** including, stop means engageable with said linkage means to limit the horizontal swinging movement of said inductor.

References Cited by the Examiner

UNITED STATES PATENTS

2,554,076	5/51	Vissat	219—10.57
2,743,345	4/56	Seulen et al.	219—10.43
2,797,289	6/57	Georgen	219—10.57

RICHARD M. WOOD, *Primary Examiner.*