Office de la Propriété Intellectuelle du Canada
Un organisme d'Industrie Canada

Canadian Intellectual Property Office
An agency of Industry Canada

CA 2387802 C 2009/01/06

(11)(21) 2 387 802

(12) BREVET CANADIEN
CANADIAN PATENT

(13) C

(86) Date de dépôt PCT/PCT Filing Date: 2000/10/19
(87) Date publication PCT/PCT Publication Date: 2001/06/28
(45) Date de délivrance/Issue Date: 2009/01/06
(85) Entrée phase nationale/National Entry: 2002/04/17
(86) N° demande PCT/PCT Application No.: US 2000/041323
(87) N° publication PCT/PCT Publication No.: 2001/045832
(30) Priorité/Priority: 1999/10/20 (US09/421,612)

(51) Cl.Int./Int.Cl. *B01D 53/56* (2006.01), *B01J 8/08* (2006.01), *C02F 1/70* (2006.01)

(72) Inventeur/Inventor:
MASON, J., BRADLEY, US

(73) Propriétaire/Owner:
STUDSVIK, INC., US

(74) Agent: GOWLING LAFLEUR HENDERSON LLP

(54) Titre : DENITRIFICATION EN UNE SEULE ETAPE
(54) Title: SINGLE STAGE DENITRATION

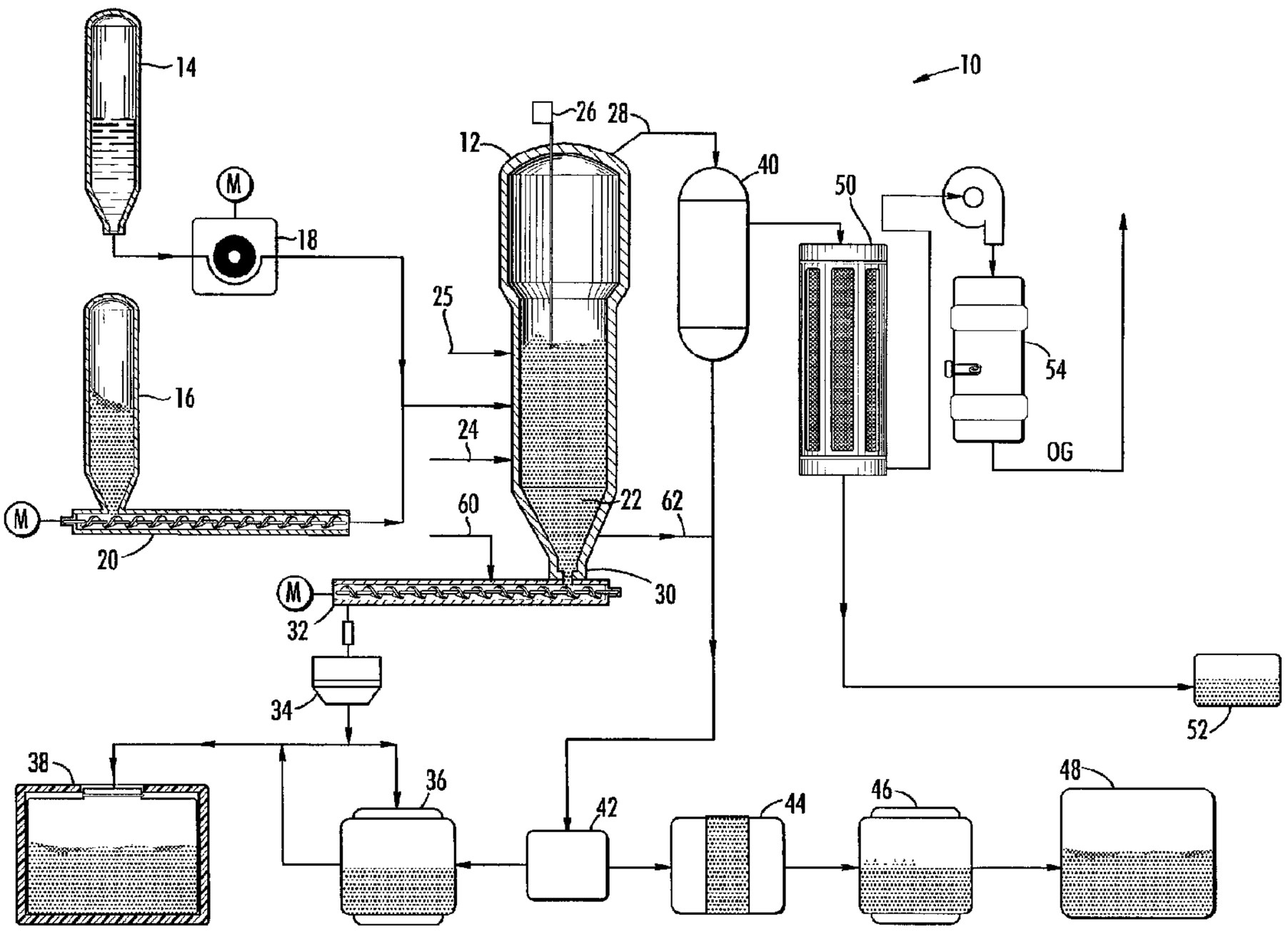

(57) Abrégé/Abstract:
A system and method is described having a single reaction vessel (12) using superheated steam optionally augmented by oxygen for reducing nitrogen oxides present in a wide variety of organic compounds. Reduction takes place quickly when a steam/oxygen mixture is injected into a fluidized bed (22) of ceramic beads. Reducing additives are metered into the reaction vessel (12) and/or provide energy input to reduce nitrates to nitrogen. The speed of the fluidizing gas mixture agitates the beads that then help to break up solid wastes and to allow self-cleaning through abrasion thereby eliminating agglomerates, and the oxygen, when used, allows for some oxidation of waste by-products and provides an additional offset for thermal requirements of operation.

(12) INTERNATIONAL APPLICATION PUBLISHED UNDER THE PATENT COOPERATION TREATY (PCT)

(19) World Intellectual Property Organization
International Bureau

(43) International Publication Date
28 June 2001 (28.06.2001)

PCT

(10) International Publication Number
WO 01/45832 A3

(51) International Patent Classification[7]: B01J 8/02, 8/08

(21) International Application Number: PCT/US00/41323

(22) International Filing Date: 19 October 2000 (19.10.2000)

(25) Filing Language: English

(26) Publication Language: English

(30) Priority Data:
09/421,612 20 October 1999 (20.10.1999) US

(63) Related by continuation (CON) or continuation-in-part (CIP) to earlier application:
US 09/421,612 (CIP)
Filed on 20 October 1999 (20.10.1999)

(71) Applicant *(for all designated States except US)*: **STUDSVIK, INC.** [US/US]; Suite 115, 111 Stonemark Lane, Columbia, SC 29210 (US).

(72) Inventor; and

(75) Inventor/Applicant *(for US only)*: **MASON, J., Bradley** [US/US]; 2501 North Road 80, Pasco, WA 99301 (US).

(74) Agents: **MANN, Michael, A.** et al.; Nexsen Pruet Jacobs & Pollard LLP, P.O. Box 10107, Greenville, SC 29603 (US).

(81) Designated States *(national)*: AE, AG, AL, AM, AT, AU, AZ, BA, BB, BG, BR, BY, BZ, CA, CH, CN, CR, CU, CZ, DE, DK, DM, DZ, EE, ES, FI, GB, GD, GE, GH, GM, HR, HU, ID, IL, IN, IS, JP, KE, KG, KP, KR, KZ, LC, LK, LR, LS, LT, LU, LV, MA, MD, MG, MK, MN, MW, MX, MZ, NO, NZ, PL, PT, RO, RU, SD, SE, SG, SI, SK, SL, TJ, TM, TR, TT, TZ, UA, UG, US, UZ, VN, YU, ZA, ZW.

(84) Designated States *(regional)*: ARIPO patent (GH, GM, KE, LS, MW, MZ, SD, SL, SZ, TZ, UG, ZW), Eurasian patent (AM, AZ, BY, KG, KZ, MD, RU, TJ, TM), European patent (AT, BE, CH, CY, DE, DK, ES, FI, FR, GB, GR, IE, IT, LU, MC, NL, PT, SE), OAPI patent (BF, BJ, CF, CG, CI, CM, GA, GN, GW, ML, MR, NE, SN, TD, TG).

Published:
— *with international search report*
— *with amended claims*

(88) Date of publication of the international search report:
3 January 2002

[Continued on next page]

(54) Title: SINGLE STAGE DENITRATION

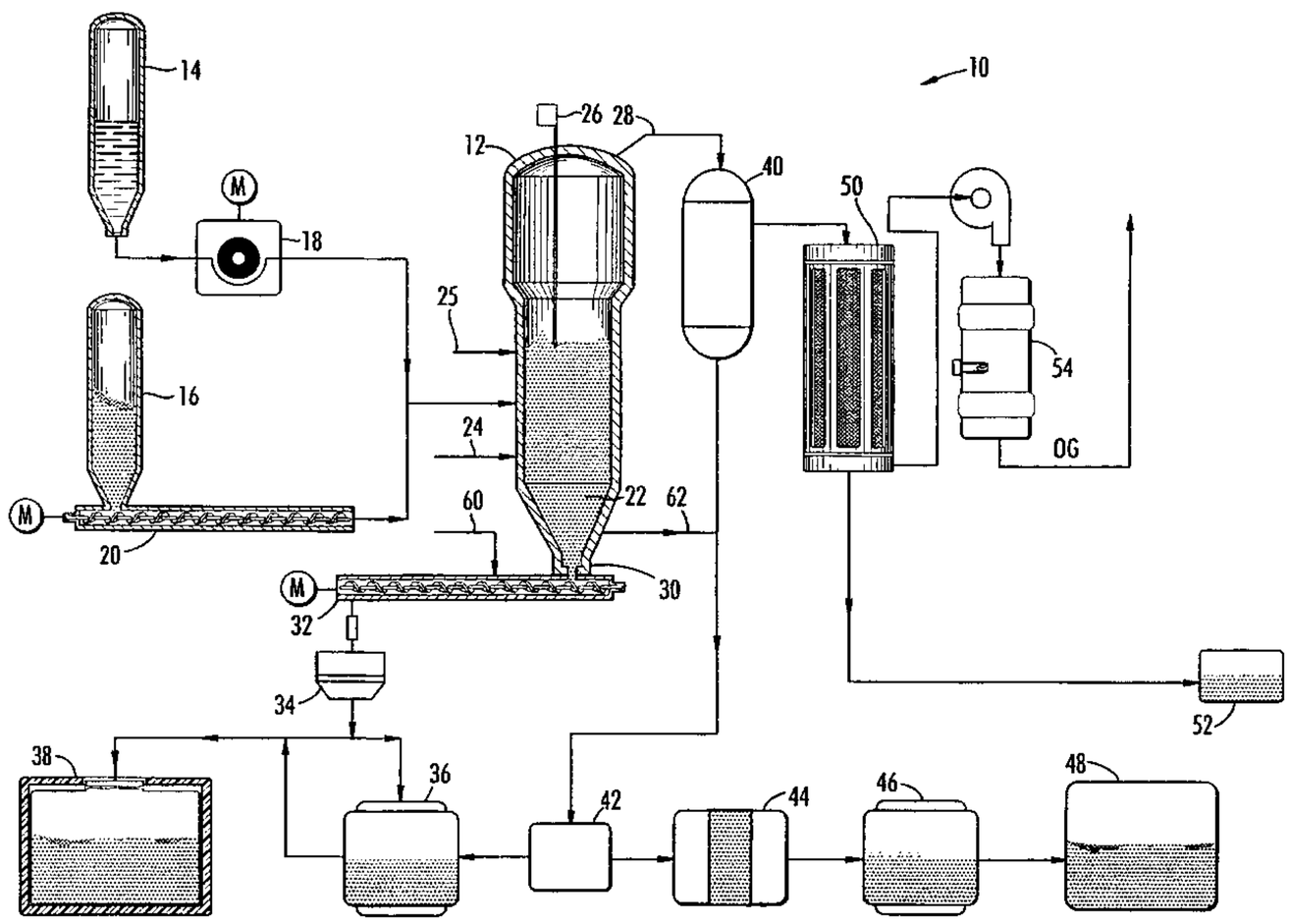

(57) Abstract: A system and method is described having a single reaction vessel (12) using superheated steam optionally augmented by oxygen for reducing nitrogen oxides present in a wide variety of organic compounds. Reduction takes place quickly when a steam/oxygen mixture is injected into a fluidized bed (22) of ceramic beads. Reducing additives are metered into the reaction vessel (12) and/or provide energy input to reduce nitrates to nitrogen. The speed of the fluidizing gas mixture agitates the beads that then help to break up solid wastes and to allow self-cleaning through abrasion thereby eliminating agglomerates, and the oxygen, when used, allows for some oxidation of waste by-products and provides an additional offset for thermal requirements of operation.

WO 01/45832 A3

WO 01/45832 A3



Date of publication of the amended claims: 31 January 2002

For two-letter codes and other abbreviations, refer to the "Guidance Notes on Codes and Abbreviations" appearing at the beginning of each regular issue of the PCT Gazette.

SINGLE STAGE DENITRATION

1. Field of the Invention

The present invention relates generally to a single step process for removing NOx compounds from waste products, compounds and wastewaters. More specifically, the invention relates to a single step process utilizing a fluidized bed container to remove NOx compounds from explosive, hazardous and/or radioactive materials.

2. Background of the Invention

Nitrogen oxides can be commonly found in many waste products and compounds. Nitrogen oxides (referred to herein as"NOx") include such compounds as nitric acid, aluminum nitrate, sodium nitrate, ammonium nitrate, potassium nitrate and the like. Traditional approaches to removing NOx include dry contact reduction processes for solid and gaseous nitrate compounds and wet absorption processes for gaseous NOx. Dry contact reduction processes may be either catalytic or non-catalytic and may be either selective or non-selective. Selective reduction processes are characterized by the selective reduction of gaseous nitrogen oxides and their consequent removal in the presence of oxygen. A common selective reduction agent for gaseous NOx is ammonia. Ammonia, however, oxidizes to form unwanted nitrogen oxide at high temperatures. Moreover, excess ammonia is itself a pollutant.

Other selective reduction methods employ catalysts such as iridium. The problem with catalyst reduction is that the presence of particulates, sulfurous acid gases and other poisons reduce catalyst effectiveness and life thereby increasing costs.

Non-selective reduction processes generally involve the addition of a reducing agent to the gaseous NOx containing material, consuming all free oxygen through combustion and reducing the NOx to nitrogen by the remaining reducing agent. Catalysts are typically utilized in these processes. Reducing agents useful in these processes are both scarce and expensive.

Wet absorption processes typically require large and expensive equipment such as absorption towers. An example of a wet absorption process is the absorption of nitrogen oxides by water or alkali solution. Another shortcoming of the wet absorption process is that these methods are not economically effective where the NOx concentration in the gaseous waste stream is above 5,000 ppm.

In the nuclear industry, there is an annual production of significant amounts of wastes which are classified as radioactively contaminated salt cakes, ion exchange media, sludges and solvents. These radioactive wastes either contain nitrogen oxides or nitrogen oxides are produced as part of the treatment of these wastes. In particular, nuclear fuel reprocessing with nitric acid produces highly radioactive nitric acid and sodium nitrate waste by-products.

For solid or slurry NOx wastes and compounds a variety of processes have been tried for NOx destruction. Rotary calciner and fluid bed processors have been utilized with typical results yielding less than 90% conversion of solid nitrates to gaseous NOx and nitrogen. The gaseous NOx generally exceeded 10,000 ppm which requires addition of extensive gaseous NOx removal methods as described above. In addition, severe agglomerations occur in processors as well as the presence of flammable or explosive mixtures of nitrates and reducing agents in the processors.

Another problem associated with prior art waste processing methods involves sulfur-containing compounds. The presence of such sulfur compounds in a vitrification melter can cause a molten sulfur salt pool to accumulate on top of the molten inorganic residue (glass); this pool causes high corrosion rates for the melter equipment. The pool can also have a high electrical conductivity, which causes short-circuiting of the heating electrodes in the melter. Additionally, potentially explosive conditions can result if large quantities of water contact the molten sulfur salt pool.

Further, the presence of heavy metals in the inorganic residues can render the final waste product hazardous, thereby requiring additional processing of the residue before disposal or higher disposal costs. Also, the inorganic residue can contain soluble components that may form aqueous solutions after processing; these solutions can result in contamination of the surroundings after disposal.

A process which does not have the limitations and shortcomings of the above described prior art methods for nitrogen oxide removal from waste streams and compounds would be highly desirable.

SUMMARY OF THE INVENTION

According to its major aspects and briefly recited, the present invention is a method and apparatus for converting nitrogen oxides directly to nitrogen using a single steam-reformer vessel. Nitrate compounds or wastes are fed into the single vessel along with a fluidized gas composed of steam and, optionally, oxygen. The single vessel contains an inert media bed made of high-density media, such as amorphous alumina beads up to 3000 microns in diameter. The fluidizing gases are injected at relatively high speeds, ranging up to 800 feet per second.

In a first embodiment of the present invention, carbonaceous materials are used as the heat source to evaporate water in the waste feed and as the principal reducing agent, or reductant. The terms reducing agent and reductant are well-understood by those skilled in the art of removing nitrogen oxides from waste feeds to mean chemicals or materials that are useful in removing oxygen from a compound or adding hydrogen to a compound.

The vessel is divided into three zones with the lowest most zone operated under oxidizing conditions via the addition of superheated steam with oxygen that reacts with the carbon to form CO/CO_2 and generate heat to evaporate water content and heat nitrate compounds to reduction temperature. The middle zone is operated under strongly reducing conditions in which NO_3 , NO, N_2O and NO_2 are reduced to N_2. Steam reforming of carbonaceous materials in this zone forms CO, H_2 and CH_4 that serve as strong gaseous reducing agents. The upper zone is operated under oxidizing conditions via the addition of more oxygen that oxidizes the remaining C, CO, CH_4 and H_2 form in the second or middle zone to form CO_2 and water. This process result in only trace NOx, CO and H_2 in off-gas from the single vessel and requires little auxiliary energy to be added.

In a second embodiment of the present invention, the lowest zone is operated under oxidizing conditions and the middle and upper segments operated under strongly reducing conditions. This process results in less NOx, more CO and H_2 output and also requires low auxiliary energy. Auxiliary energy can be provided by electrical heaters.

In a third embodiment of the present invention, all three segments are operated under strongly reducing conditions. This process results in less NOx, increased CO and H_2 and requires additional auxiliary energy.

In a fourth embodiment of the present invention, the lower and middle segments are operated under strongly reducing conditions and the upper segment is operated under oxidizing conditions. This process results in low NOx, no CO and H_2 output but requires auxiliary energy to be added.

BRIEF DESCRIPTION OF THE DRAWINGS

In the drawings,

Fig. 1 is a schematic illustration of a system for removing NOx from a waste stream or compound according to a preferred embodiment of the present invention.

DETAILED DESCRIPTION OF PREFERRED EMBODIMENTS

The present invention is an apparatus and process for removing NOx from nitrate bearing compounds and waste product feeds. The present apparatus and processes will be described in particular with respect to radioactive waste but any nitrogen oxide containing waste or product stream can be processed in accordance with the following process and with the components of the system.

The process is based on a single fluidized bed reactor vessel using steam for fluidizing which may be operated under strongly reducing conditions or under strongly reducing conditions in combination with oxidizing conditions. Other fluidizing gases or additives may be utilized to modify the oxidizing or reducing conditions in the reactor. Typical other fluidizing gases include: hydrogen, oxygen (when oxidizing conditions are desired), methane, ammonia, etc. Other additives can be added such as charcoal, carbonaceous materials, sugars, hydrogen peroxide, etc. to further modify reducing or oxidizing conditions in the bed. Wet scrubbers are used to treat gaseous effluent from the process. The wastes that can be processed according to

the present invention include not only NOx containing waste streams resulting from the decomposition of ion exchange resins, but also NOx containing waste stream resulting from nuclear reprocessing, explosives and energetics, fertilizer and gaseous off-gas streams and the like.

Referring now to Fig. 1, there is shown a system according to the present invention and generally indicated by reference number **10**. System **10** includes a single reactor vessel **12**. Waste feed, which may be comprised of liquid slurries and sludges **14** and/or solids **16**, are fed into the reactor vessel **12**. In the case of the liquid slurries and sludges **14**, a pneumatic pump, peristaltic pump or progressive cavity **18** may be employed for delivery of the pumpable fluids to the reactor vessel **12**. In the case of the solids **16**, a screw auger **20** may be employed to deliver the solid waste stream into the reactor vessel **12**.

In reactor vessel **12**, inert media **22** is used in the fluid bed. Media **22** is preferably an inert material which may serve as a heat sink such as silica or alumina, most preferably, amorphous alumina beads at least 200 and preferably up to 1000 microns in diameter, however beads up to 5,000 microns in diameter can be utilized. Such size beads do not easily elutriate out of the vessel and therefore minimize carryover. Another advantage of the amorphous alumina is that it will not form eutectic salt/glasses that can form harmful agglomerates that affect reactor efficiency as when common silica sand is utilized. The amorphous alumina is also exceptionally strong and hard and resists attrition due to bed friction and impact.

In order to evaporate water present in the waste feeds and to serve as a heat source, charcoal, sugar and/or other carbonaceous materials are added to reactor vessel **12**, optionally other reductants or catalysts such as iron or nickel oxalates, oxides, or nitrates may be used.

Reaction bed materials can be modified to include these, or other metals, in order to further improve the denitration process. For example, the addition of 5 to 10% iron oxide to the reaction bed medium can improve NOx reduction by more than two-fold. Fluidizing medium (gases) is introduced into reaction vessel **12** via inlet **24**. Steam is preferred to combustion gases as the fluidizing medium because it is more reactive, and generates CO and H_2 that are highly reducing by steam reformation of carbonaceous materials. Gaseous NOx compounds can be co-injected with the fluidizing gases through inlet **24**.

The heat generated by the steam allows the reaction vessel to be operated at the temperature required for reduction of the nitrogen oxides. This heat can also volatize sulfur-containing compounds, thereby separating them from the inorganic residues. As discussed above, the presence of such sulfur compounds can cause an equipment-damaging corrosive molten sulfur salt pool to accumulate on top of the molten inorganic residue. The electrically-conductive pool would also cause short-circuiting of the heating electrodes or potentially explosive conditions if contacted by large quantities of water. The present method, for example, converts sulfates such as Na_2SO_4 by reduction into volatile SOx and/or H_2S. By volatizing such sulfur-containing compounds, the present method avoids these problems that are traditionally associated with the reduction of nitrogen oxide-containing waste streams. The sulfur reduced residue can then be melted into glass without forming a sulfur salt pool on top of the melter glass pool.

The fluidizing medium can be an inert gas, but is preferably a reforming gas and may have oxygen present. Most preferably, the medium is superheated steam. The fluidizing velocity can range from about 1.0 feet per second or higher depending on the bed media,

preferably 3 to 10 feet per second (FPS) depending upon the size of the bed media. Fluidizing gas distributors are designed to provide higher than normal gas/orifice velocities. Typical gas distributor velocities are 100 to 200 FPS, however, in the preferred embodiment gas velocities of >400 FPS are desired.

The high fluidizing gas jet speed has several advantages. High velocity fluidizing gas jets in a vertically oriented bed provides jet impingement on the media to help break down the softer, friable feed and to break-up agglomerates. Moreover, the media beads become self-cleaning due to abrasion in the high impact area around the fluidizing gas distributor.

Reactor vessel **12** is preferably operated in elutriating mode. Sodium and other low melting eutectics are thereby present in only low concentration (<2%) and are quickly carried out of the bed. The media beads are self-cleaning through abrasion. The low inventory of unconverted nitrates or sodium compounds greatly minimizes agglomeration potential.

As discussed above, the reactor vessel **12** may be operated using one of four methods, in the first method, the lower portion of the media bed is operated under oxidizing conditions. To achieve this condition oxygen is mixed with the steam and introduced into the reactor vessel **12** via inlet **24** and may be optionally superheated. The pressure in the reactor vessel **12** is preferably about 13 to 15 psia. The reactor vessel **12** is preferably operated at 600 to 800 degrees centigrade. The media bed depth is preferably between about 3 to 8 feet, expanded. The middle portion of media bed in reactor vessel **12** is operated under strongly reducing conditions, and the upper portion of the media bed is operated under oxidizing conditions by the addition of oxygen via inlet **25**. Temperature is maintained within reactor vessel **12** by heater **26** or by super heating fluidizing gases which provides auxiliary energy as needed, particularly during start-up. When

the NOx has been reduced to nitrogen, the nitrogen, steam and other syn gases leave the reaction vessel **12** via port **28**. Small sized reformed residues, including entrained particulates also leave via port **28.** Heavier solids and debris leave via port **30** and are carried away by screw auger **32** to collector **34**. Auger **32** is preferably water cooled. From collector **34** the larger solids and debris may be directed to stabilization processor **36** or to final reformed residue waste collector **38**.

The screw auger **32** can be optionally fitted with water washing capability. Water can be introduced into the bottom of screw auger **32** through inlet **60**. Water dissolves any soluble sodium salt or other agglomerates that collect in the bottom of the reactor vessel **12**. Salt water solution is removed from the bottom of reactor vessel **12** through screened outlet port **62**. If desired, the salt water solution from outlet **62** can be collected in residue separator **42**.

The nitrogen gas, steam, other syn gas and fine particulates pass through scrubber/evaporator **40**. Any non- gaseous reformed residue or particulates collected in the scrubber/evaporator **40** is directed to residue separator **42** wherein the insoluble reformed residue are separated from the soluble salt solution. The reformed residue is directed to the stabilization processor **36** while the salt solution is directed to salt separator **44** then to a salt dryer **46** and finally to a salt package **48**. An optional filter (not shown) can be installed between the reactor gas outlet **28** and the scrubber/evaporator **40**. Solids collected by the optional filter can be directed to residue stabilization processor **36**. The cooled and scrubbed syn gas and water vapors then pass to condenser **50**. The resultant water is directed to the recycled water tank **52** while the syn gas moves to thermal converter **54**. Off-gases (OG) from the thermal converter **54** are then monitored for compliance with the applicable environmental requirements prior to release.

Under the conditions of method 1 set forth above, the process treatment results in final gaseous effluent very low in NOx with no CO and H_2 output. The system generally requires low auxiliary energy addition. This system does not require the removal of NOx in the off gas scrubber system as NOx levels exiting the reactor **12** are routinely <25 ppm. The addition of thermal converter **54** for CO and CH_4 oxidation is also not required.

Alternatively and in a second method of the invention, the lower portion of the media bed in reactor vessel **12** may be operated under oxidizing conditions, as discussed above, the middle portion and the upper portions of the media bed are operated under strongly reducing conditions. Method 2 results in lowered NOx exiting reactor **12** as compared to method 1 but has increased levels of CO and H_2 and other trace volatile organics in the reactor **12** output. Additional auxiliary energy is generally needed in the reactor **12** and thermal converter **54** is required.

In method 3, the reactor vessel **12** is operated only under strongly reducing conditions. Method 3 results in lowered NOx, increased CO and H_2 and requires increased auxiliary energy and use of thermal converter **54**.

In method 4, only the upper portion of the reactor vessel **12** media bed is operated under oxidizing conditions. Method 4 results in low NOx, no CO and H_2 output and increased auxiliary energy. The thermal converter **54** is not required in the practice of this method.

Notably, gaseous NOx can also be processed by direct introduction to reactor **12** with other waste feeds. For example, high NOx offgas from a vitrification melter or thermal denitration process can be used as both the waste stream and the fluidizing gas; however, steam is co-injected to keep the total gas flow through the reaction bed at greater than 20% steam and to provide uniform fluidizing gas velocities.

Testing has demonstrated the usefulness of metal additions to the bed to facilitate NOx reduction. Metal additives are not always required but are useful in maximizing NOx conversion to nitrogen gas. Typical metals that can be used include copper, cobalt, iron or nickel oxalate or nitrates that can be co-injected with the waste feed in concentrations of less than 0.5%.

The addition of charcoal or carbonaceous solids to the bed in sizes ranging up to 0.5 inches in diameter is unique to the preferred embodiment. The large particles of carbon maintain a constant inventory of carbon that is not possible with typical fine sugars, organic powders or liquid chemicals previously used to facilitate nitrate reduction. The presence of larger carbon solids together with addition of soluble carbon in the form of formic acid, sugars, etc. provides superior nitrate reductions. The presence of carbon compounds in the bed will produce highly reducing CO and H_2 in the bed via steam reformation.

Additionally, certain additives such as aluminum metal and phosphate salts or oxides can be added to form high melting point salts with alkaline earth elements. For example, sodium phosphate is a high melting point sodium salt compared with sodium eutectics that have relatively low temperature melting points. These combining elements help minimize formations of agglomerations in the bed.

In the present method, heavy metals or inorganic cations can be converted into volatile fluoride or chloride compounds by the addition of appropriate fluorides and chlorides. As discussed above, the presence of heavy metals in the inorganic residues can render the final waste product hazardous, thereby requiring additional processing of the residue before disposal. For example, in a waste product that contains the relatively non-volatile CsO, chloride additives can convert the Cesium to very volatile $CsCl_2$, thereby separating the heavy metal cation from

the inorganic residue. By converting such hazardous metals or cations to the corresponding fluorides or chlorides and removing them from the inorganic residue by volatization, the present method avoids this problem that is traditionally associated with the reduction of nitrogen oxide-containing waste streams.

Further, the present method can use additives to tailor the solubility of the resulting inorganic residue. As discussed above, soluble components in the residue may form aqueous solutions that can result in contamination of the surroundings after disposal. An example of such tailoring of the solubility of the residue in the present method is the addition of aluminum nitrate to sodium-containing waste; in the correct proportions, this additive produces sodium-aluminum oxides that are insoluble in water. By converting such soluble components into insoluble derivatives, the present method avoids this problem that is traditionally associated with the reduction of nitrogen oxide-containing waste streams.

It will be apparent to those skilled in the art of removing NOx from waste feeds that many modifications and substitutions can be made to the preferred embodiments described above without departing from the spirit and scope of the present invention, which is defined by the appended claims.

WHAT IS CLAIMED IS:

1. A method for removing nitrogen oxides, said method comprising the steps of:

providing a waste feed containing said nitrogen oxides;

providing a reaction vessel containing a reaction bed having a lower portion, a middle portion, and an upper portion;

heating said reaction vessel to an operating temperature of at least 400°C but below the volatilization temperature of any metal ions in said waste feed; and

injecting superheated steam, oxygen, reductants, and waste material into said reaction vessel, wherein said superheated steam is injected at a velocity that agitates said waste material and elutriates fine solids from said reaction bed; and

operating at least said middle portion of said reaction bed under strongly reducing conditions so that substantially all of said nitrogen oxides in said waste material are reduced at said operating temperature, thereby eliminating substantially all said nitrogen oxides present in said waste material and leaving an inorganic solid residue low in said nitrogen oxides and a gaseous effluent low in said nitrogen oxides.

2. The method as recited in claim 1, further comprising the step of co-injecting oxygen with said steam into said lower portion and said upper portion such that said lower portion and said upper portion operate under oxidizing conditions.

3. The method as recited in claim 1, further comprising the step of co-injecting oxygen with said steam into said lower portion such that said lower portion operates under oxidizing conditions.

4. The method as recited in claim 1, further comprising the step of co-injecting oxygen with said steam into said upper portion such that said upper portion operates under oxidizing conditions.

5. The method as recited in claim 1, wherein said operating temperature is at least 400°C.

6. The method as recited in claim 1, wherein said operating temperature is above the volatization temperature of metal chlorides and metal fluorides contained in said reaction vessel and below the volatilization temperature of metal ions contained in said reaction vessel.

7. The method as recited in claim 1, wherein when said waste contains sulfur compounds, said reductants are selected from the group consisting of aluminum compounds, phosphate compounds, and carbonaceous compounds.

8. The method as recited in claim 1, wherein said reaction bed is comprised of inert beads.

9. The method as recited in claim 8, wherein said inert beads comprise amorphous alumina beads.

10. The method as recited in claim 8, wherein said inert beads have a diameter of at least approximately 300 microns and said steam is injected at a velocity sufficient to fluidize said bed.

11. The method as recited in claim 8, wherein said inert beads have a diameter of approximately 2000 microns and said steam is injected at a velocity sufficient to agitate said beads in said bed.

12. The method as recited in claim 8, wherein said steam is injected into said reaction vessel at an average reaction bed velocity of at least 1.0 feet per second.

13. The method as recited in claim 8, further comprising the step of agitating said waste material in said reaction vessel to speed reduction of said nitrogen oxides by use of superheated steam.

14. The method as recited in claim 1, further comprising the step of using a gas distributor for said steam wherein the orifice velocity of said gas distributor is greater than 300 FPS to facilitate agglomeration break-up and self-cleaning of said reaction bed.

15. The method as recited in claim 1, further comprising the step of injecting at least

one co-reactant into said reaction vessel to enhance the reduction of said nitrogen oxides.

16. The method as recited in claim 15, wherein said co-reactant is selected from the group consisting of solid carbonaceous material, soluble carbonaceous material, and metal compounds.

17. The method as recited in claim 16, wherein said metal compounds are selected from the group consisting of iron compounds, nickel compounds, copper compounds, and cobalt compounds.

18. The method as recited in claim 1, further comprising the step of injecting at least one additive into said reaction vessel to form higher melting point alkaline earth salts.

19. The method as recited in claim 18, wherein said additive is selected from the group consisting of aluminum compounds and phosphate compounds.

20. The method as recited in claim 1, wherein said waste material is high NOx off-gas from a thermal denitration process.

21. The method as recited in claim 1, further comprising the step of removing larger solids out of the bottom of said reaction vessel.

22. The method as recited in claim 1, further comprising washing said reaction bed to dissolve soluble salts and agglomerates.

23. The method as recited in claim 1, wherein said washing takes place in the bottom section of said reactor.

AMENDED SHEET

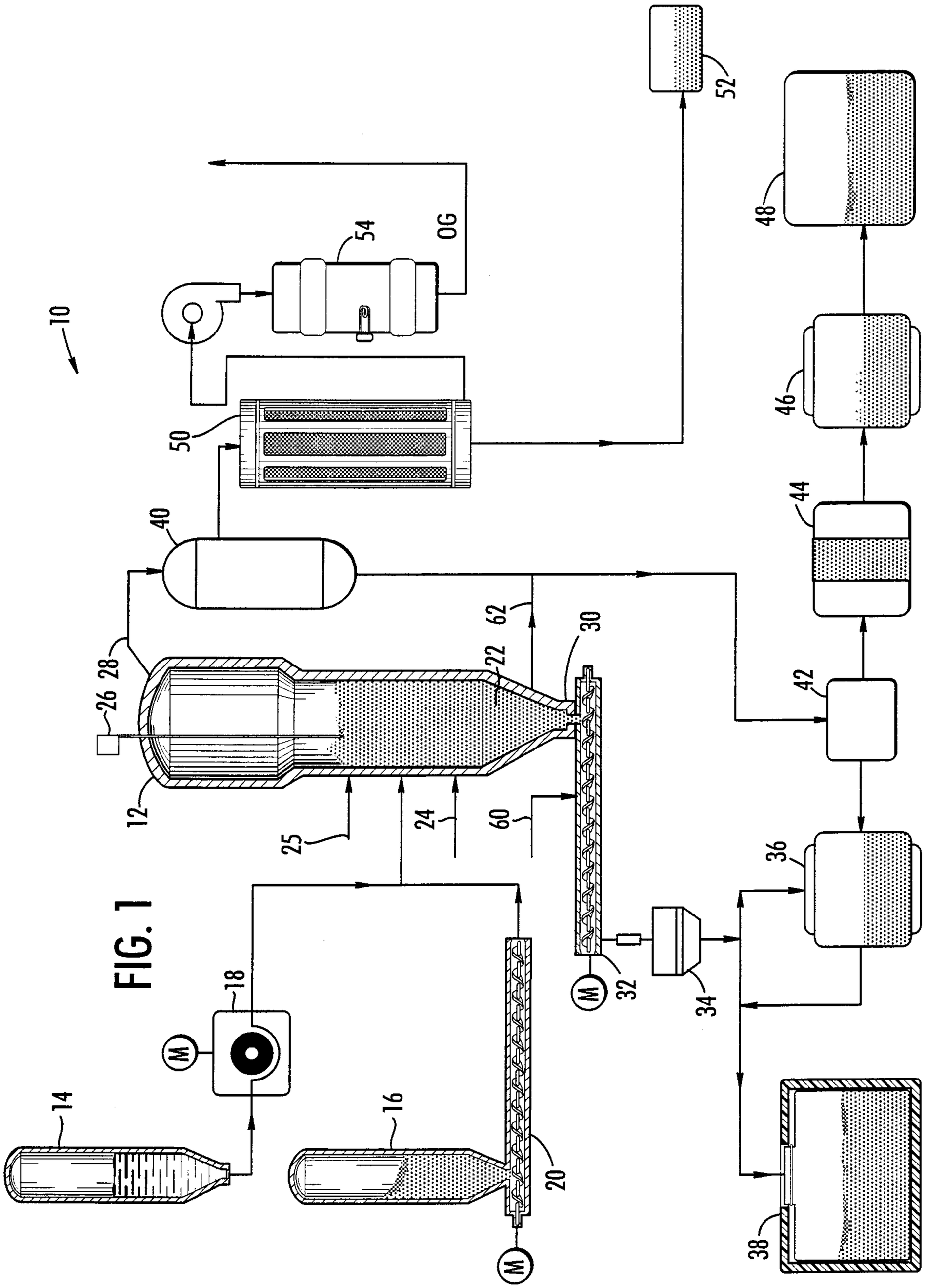
10
12
14
16
18
20
22
24
25
26
28
30
32
34
36
38
40
42
44
46
48
50
52
54
56
60
62
M
M
M

FIG. 1

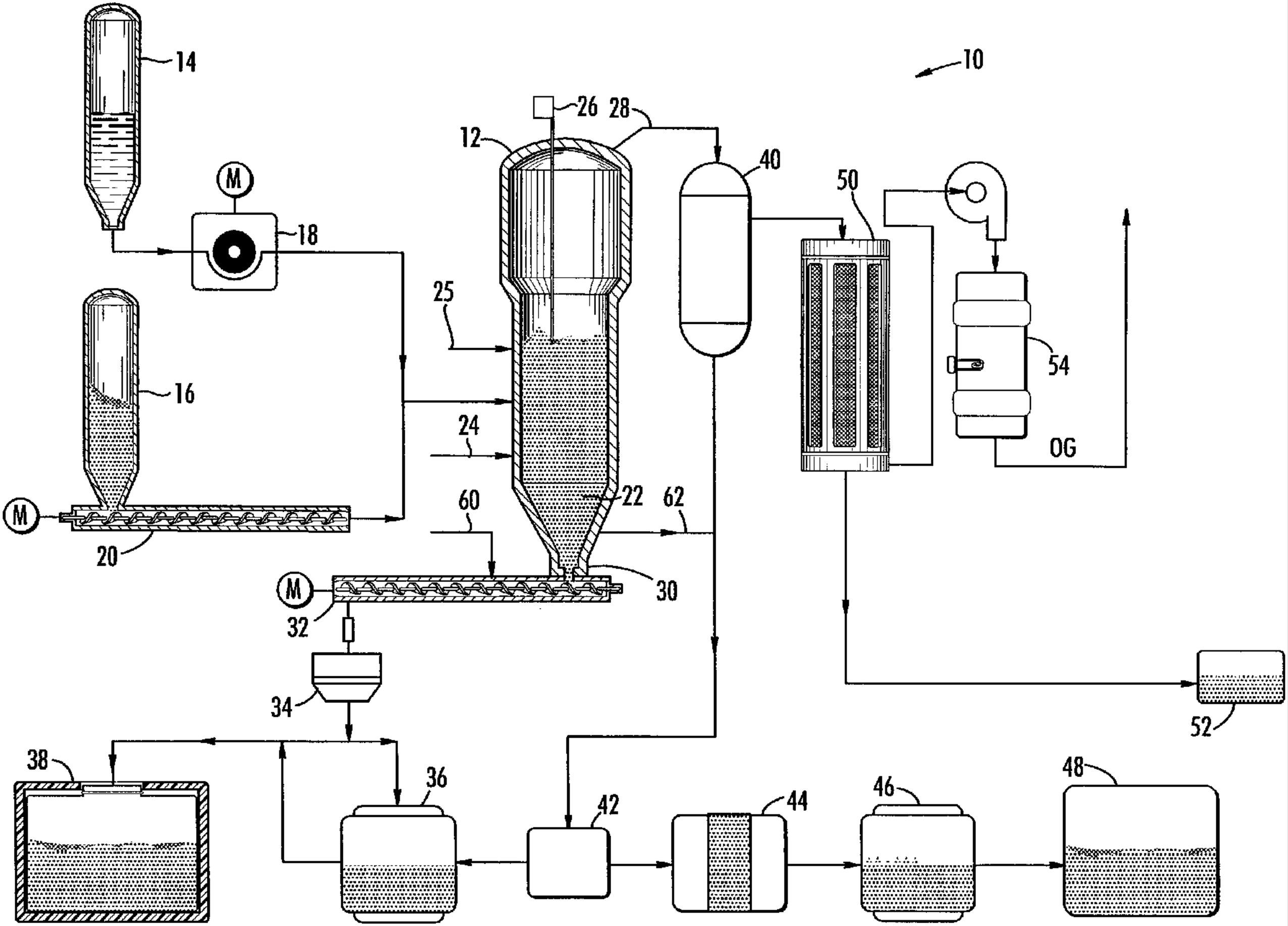

10
14
16
18
20
M
M
M
12
26
28
40
50
54
OG
25
24
22
60
62
30
32
34
52
38
36
42
44
46
48