June 24, 1930. C. A. JOY 1,765,921

DEEP WELL PUMP

Filed May 7, 1928 3 Sheets-Sheet 1

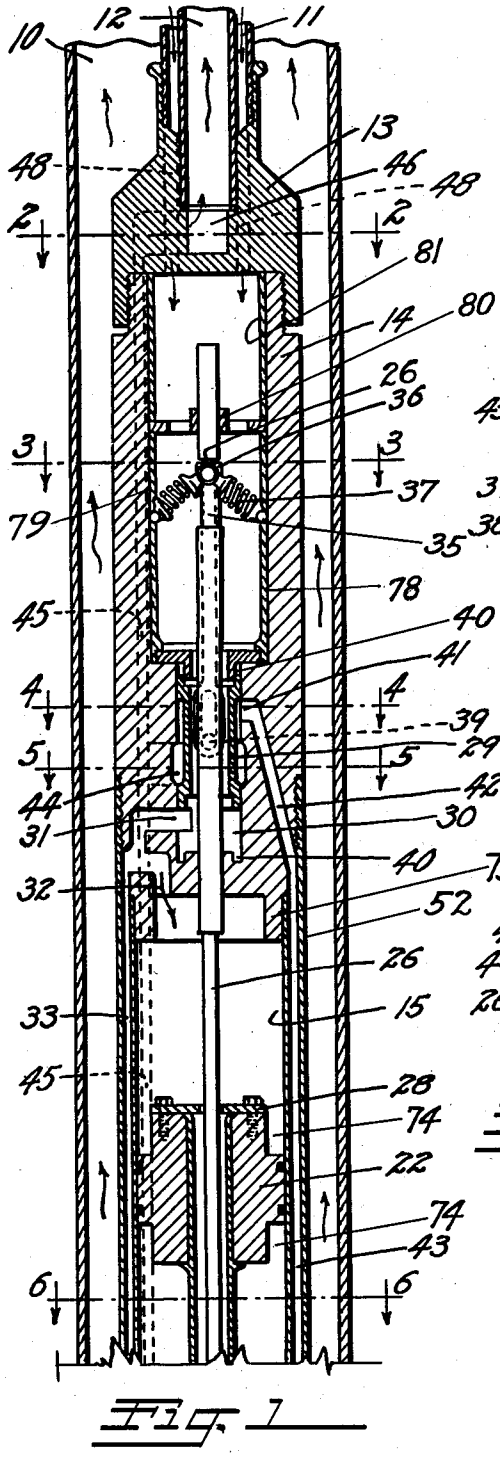

Fig. 1

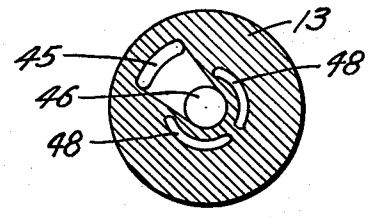

Fig. 2

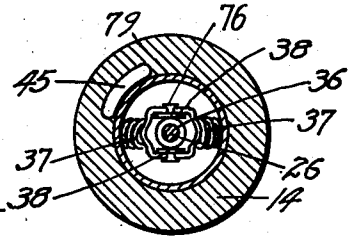

Fig. 3.

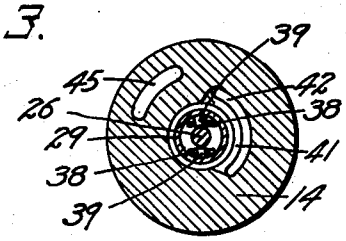

Fig. 4

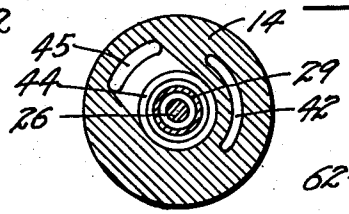

Fig. 5.

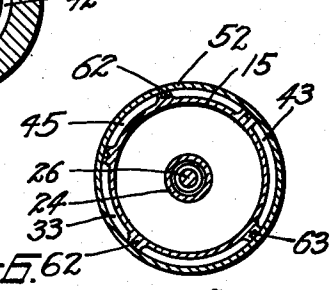

Fig. 6.

Inventor
CHARLES A. JOY

By [signature]

Attorney

June 24, 1930. C. A. JOY 1,765,921

DEEP WELL PUMP

Filed May 7, 1928 3 Sheets-Sheet 2

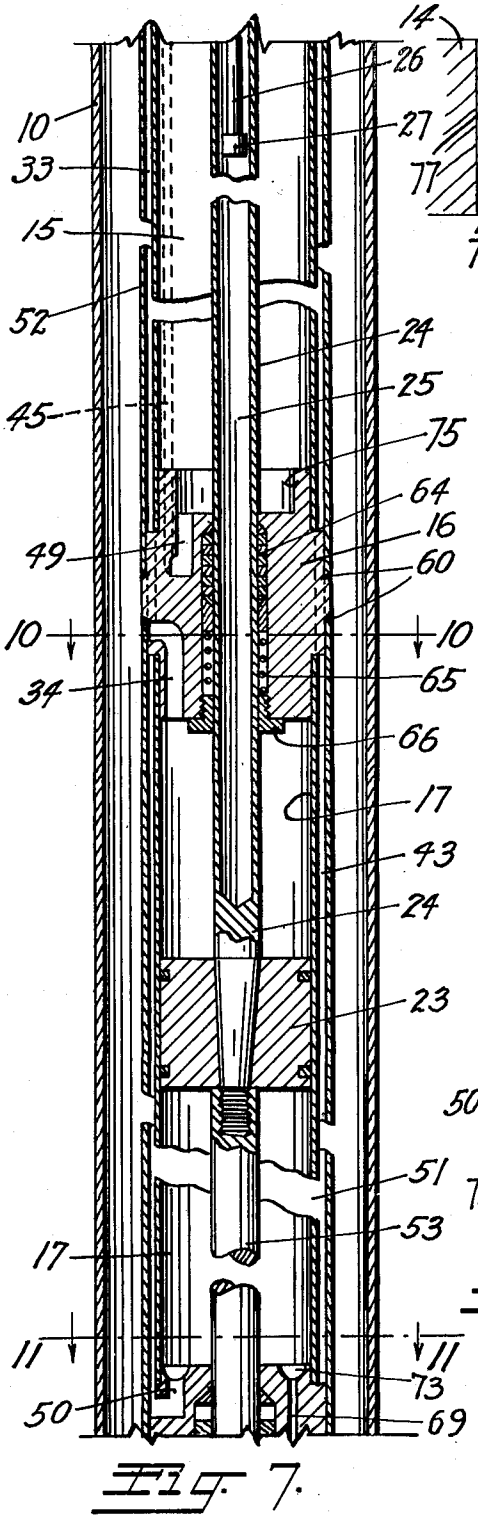

Fig. 7.

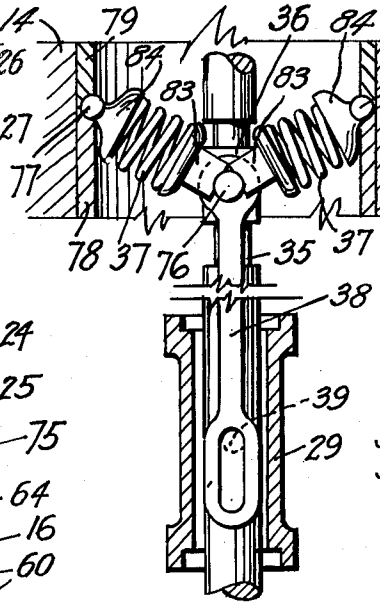

Fig. 8.

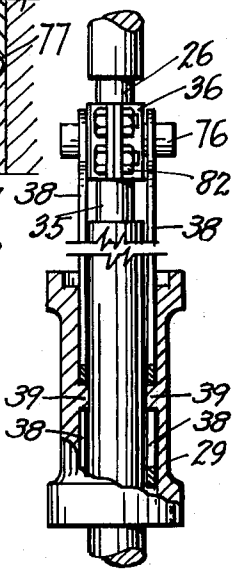

Fig. 9.

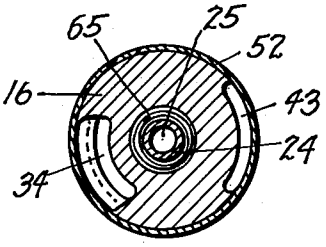

Fig. 10.

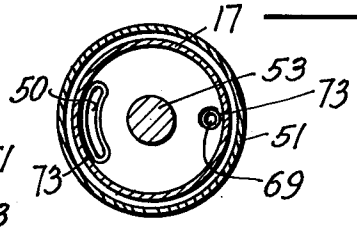

Fig. 11.

Inventor
CHARLES A. JOY

By

Attorney

June 24, 1930. C. A. JOY 1,765,921

DEEP WELL PUMP

Filed May 7, 1928 3 Sheets-Sheet 3

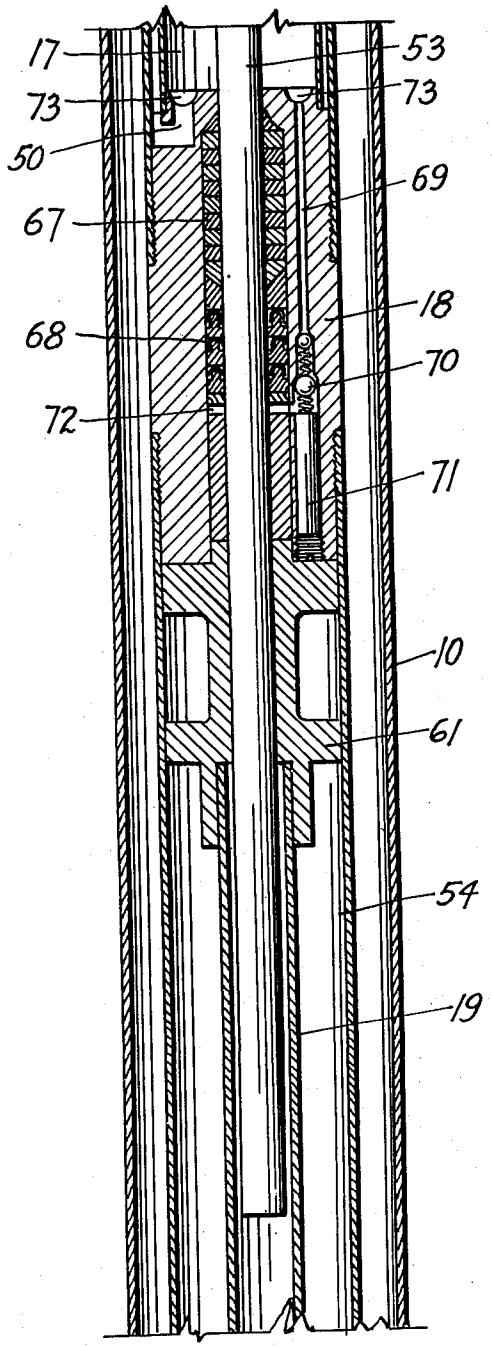

Fig. 12.

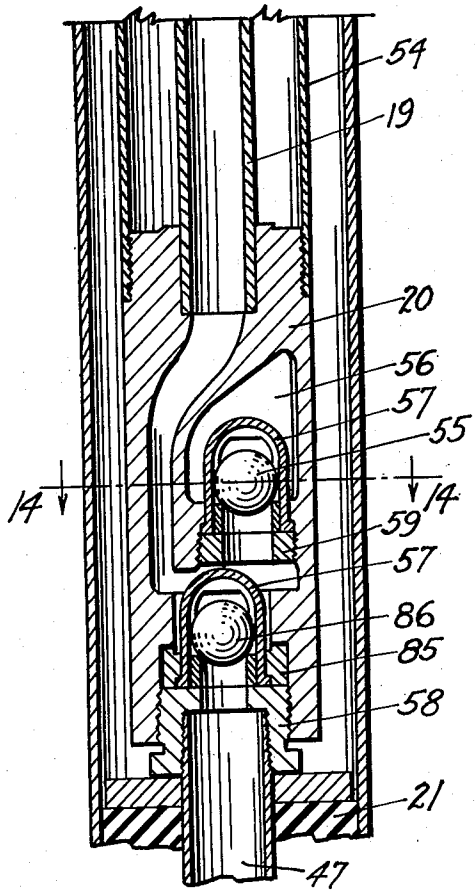

Fig. 13.

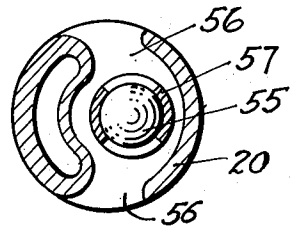

Fig. 14

Inventor

CHARLES A. JOY

By

Attorney

Patented June 24, 1930 1,765,921

UNITED STATES PATENT OFFICE

CHARLES A. JOY, OF DENVER, COLORADO

DEEP-WELL PUMP

Application filed May 7, 1928. Serial No. 275,933.

This invention relates to a deep well pump, more particularly designed for oil wells, and has for its principal object the provision of a pump which can be efficiently operated at the bottom of the well without the necessity for the usual "sucker rods."

Another object of the invention is to so construct the pump that several cylinders may be used in tandem so that a relatively large pressure surface can be obtained within the small diameters necessitated by the well casings.

Another object of the invention is to so arrange the pump that the power pistons will not be required to operate against the well pressure on the return stroke.

Still another object of the invention is to provide an efficient and positive valve action for controlling the pressure supply to the power cylinders, which will act instantaneously at each limit of travel of the power piston.

A further object is to provide means for preventing sand and muck from following the pump plunger into the packing.

A further object is to cause only one of the tandem cylinders to function on the return stroke so as to economize on operating fluid.

A still further object is to provide inlet and outlet valves for the pump which will have a relatively large capacity and will be positive and nonrestrictive in their action.

Other objects and advantages reside in the detail construction, of the invention, which is designed for simplicity, economy, and efficiency. These will become more apparent from the following description.

In the following detailed description of the invention reference is had to the accompanying drawings which form a part hereof. Like numerals refer to like parts in all views of the drawings and throughout the description.

In the drawing:

Fig. 1 is a vertical longitudinal section through a well casing and through the upper portion of my improved pump in place therein.

Fig. 2 is a cross section through the cap of the device, taken on the line 2—2, Fig. 1.

Fig. 3 is a cross section through the valve operating chamber, taken on the line 3—3, Fig. 1.

Figs. 4 and 5 are cross sections through the operating valve box, taken on the lines 4—4 and 5—5, respectively, Fig. 1.

Fig. 6 is a cross section through the upper power cylinder, taken on the line 6—6, Fig. 1.

Fig. 7 is a vertical longitudinal section illustrating the continuation of the pump below the portion shown in Fig. 1.

Fig. 8 is a detail side elevation of the valve operating mechanism.

Fig. 9 is a detail edge elevation of the valve operating mechanism with the operating springs removed.

Figs. 10 and 11 are cross sections through the pump, taken on the lines 10—10 and 11—11, respectively, Fig. 7.

Fig. 12 is a vertical section illustrating the continuation of the pump below the portion shown in Fig. 7.

Fig. 13 is a similar vertical sectional continuation of Fig. 10 illustrating the lower extremity of the pump.

Fig. 14 is a cross section through the discharge valve of the pump cylinder taken on the line 14—14, Fig. 13.

Any desired operating medium may be used for operating the pump such as compressed air, steam, water, oil, etc. The operating medium is conducted down the tube 11 from any suitable supply source upon the ground surface and exhausts against atmospheric pressure back to the surface through the exhaust tube 12. If steam is used, the pressure steam in the tube 11 will heat the exhaust tube 12 so as to reduce condensation. The invention will be described as air-operated to pump oil. It is to be understood, however, that the invention is not limited to this use nor to this operating medium.

In the drawing, the oil well casing is illustrated at 10. The pressure tube to the pump operating mechanism at 11, and the exhaust tube from the operating cylinders at 12. The tube 12 is preferably placed concentri-

cally within the tube 11. The pumped fluid rises around the pump and around the tube 11 within the well casing 10. The tubes 11 and 12 terminate in a cap 13 which forms the top of the pump proper.

The pump comprises a valve chamber casting 14, below which an upper power cylinder 15 is arranged within the jacket tube 52. The power cylinder 15 terminates in a partition block 16, below which a lower power cylinder 17 is placed. The lower power cylinder 17 is arranged within a jacket 51 and terminates in a packing block 18, below which a pump cylinder 19 is carried. The pump cylinder 19 terminates at the lower extremity of the device in a pump valve casting 20 from which extends a suction pipe 47. When the pump is in place within the well casing, a packer 21 of any of the usual designs is placed around the suction pipe to prevent the pumped oil from returning to the well.

A first power piston 22 operates within the upper power cylinder 15 and a second power piston 23 operates within the lower power cylinder 17. The pistons 22 and 23 are carried on the extremities of a common piston rod 24 which is hollowed through the major portion of its length as shown at 25.

A valve operating rod 26 extends within the hollowed portion 25 of the piston rod 24 and terminates in a head 27. A plate 28 is secured to the piston 22 about the rod 26 so as to contact with and prevent withdrawal of the head 27.

To force the pistons downwardly, the compressed air from the tube 11 flows through passages 48 in the cap 13 into the valve casting 14, thence through a hollow spool valve 29 into a chamber 30. From the valve chamber 30 the air flows through a port 31 and a passage 32 into the upper part of the upper power cylinder 15 and acts against the top of the piston 22. A second passage 33 passes downwardly from the port 31 along side of the power cylinder 15 into communication with a port 34 in the partition block 16. This allows the air to flow into the upper part of the lower power cylinder 17 and act against the top of the piston 23.

The air from below the piston 22 exhausts through a breather port 49 into a breather passage 45 which extends upwardly along side the upper power cylinder 15, thru the valve casting 14 and the cap 13 to an exhaust chamber 46, which opens to the exhaust tube 12. The air from below the piston 23 exhausts thru a port 50 into the space between the jacket 51 and the power cylinder 17, thence thru a passage 43 to the casting 14. In the casting 14 it flows thru a passage 42 and a port 41 into an exhaust chamber around the spool valve 29. The exhaust chamber communicates thru a port 44 with the breather passage 45 thence to the exhaust tube 12.

As the pistons approach the limit of their down stroke the plate 28 contacts with the head 27 and draws the valve rod 26 downwardly. As the valve rod 26 moves downwardly, its upper extremity contacts with a spring sleeve 36 which surrounds a reduced portion 35 on the valve rod and carries two angularly placed compression springs 37. The spring sleeve 36 carries two slotted bars 38, which extend downwardly along each side of the valve rod 26, their slotted openings surrounding bosses 39, formed on the interior of the spool valve 29. When the valve rod has compressed the springs to the horizontal position, the extremities of the slotted openings will have engaged the bosses 39 on the spool valve. Further movement of the valve rod causes the springs to snap the spring sleeve 36, and the bars downwardly, forcing the spool valve 29, to its lowermost or reverse position.

With the spool valve in its reverse position the compressed air from the valve casting 14, will flow over the upper extremity of the spool valve through the port 41, the passage 42, the vertical passage 43, the jacket 51, and the port 50, into the lower end of the lower power cylinder 17, and act against the bottom of the piston 23 to force the connected pistons upwardly. The piston 22 exerts no lifting action.

The air from above the piston 23 flows back thru the passages 34 and 33 and the air from above the piston 22 flows back thru the passage 32 to the port 31 from thence thru the peripheral depression in the spool valve 29 to the exhaust port 44, and the breather passage 45. Atmospheric air flows into the lower part of the upper cylinder 15, as the piston 22 moves upwardly, from the breather pasage 45 thru the port 49. The lower side of the piston 22 is never under pressure.

The piston rod 24 connects, thru the piston 23, with a pump plunger 53 by means of which the actual pumping is done. The pump plunger 53 extends below the lower extremity of the power cylinder 17 thru the packing block 18 into the pump cylinder 19. The pump cylinder 19 is surrounded by a supporting tube 54 which supports the valve casting 20. The pump plunger 53 is of smaller diameter than, and does not contact with, the pump cylinder 19, but acts to pump the oil by displacement.

As the plunger moves downwardly, the oil is forced from the cylinder 19 thru a ball check valve 55 and openings 56 into the well casing 10. As the pump plunger moves upwardly, the well pressure will replace the plunger with well oil flowing thru a second ball check valve 86 from the suction pipe 47. The ball check valves 55 and 86

are supported in housings 57 which can be removed thru the bottom of the valve casting 20, by removing a suction pipe nipple 58 and clamp nut 59. The space between the pump cylinder 19 and the supporting tube 54 serves no purpose and could be opened to the well casing if desired.

The entire structure is secured together as a solid unit. The valve chamber casting 14 is threaded into the cap 13 and the upper jacket 52 is threaded onto the valve chamber casting. The partition block 16 is secured to the lower extremity of the jacket 52 in any desired manner such as by welding at point 60. The jacket 52 holds the power cylinder 15 tightly between the partition block 16 and the valve chamber casting 14. The lower jacket 51 is also welded or otherwise secured to the partition block 16 and is threaded onto the packing block 18. The jacket 51 firmly clamps the lower power cylinder 17 between the partition block 16 and the packing block 18.

The supporting tube 54 is threaded onto the packing block 18 and the valve casting 20 is threaded into the supporting tube so that this tube maintains the pump cylinder 19 firmly clamped betweeen the valve casting 20 and a head block 61 which in turn clamps against the packing block 18. The pressure tube 11 is threaded into the cap 13 and may be used to support a portion of the weight of the device. The majority of the weight, however, rests upon the packer 21. The exhaust tube 12 is simply seated into the cap 13.

Where the various pasages pass thru the castings and blocks, cored openings are formed. Along side of the power cylinder 15, these passages are formed as illustrated in Fig. 6, by means of longitudinal bosses 62 which extend from the power cylinder into packed contact with the jacket 52. These bosses may have a longitudinal groove provided with suitable packing for insuring a tight contact with the jacket as indicated at 63.

Suitable packing 64 is compressed around the piston rod 24, where it passes thru the partition block 16, by means of a spring 65 and a packing nut 66. Suitable packing 67 is also provided where the pump plunger 53 passes thru the packing block 18. It may be desirable to employ in addition to the packing 67, a series of cup washers 68 at this point to insure a tight joint.

Pumps operating within deep wells are usually short lived, because of the sand and grit which follows the pump plunger and cuts away the packing. To avoid this in the present invention I provide a passage 69 communicating with the lower portion of the lower power cylinder 17. This passage is closed against upward flow by one or more spring actuated check valves 70, access to which may be obtained by removing a plug 71. Below the check valves 70, the passage 69 communicates directly with the pump plunger 53 through ports 72.

The operation of this feature is as follows: As the pump plunger 53 begins to move upwardly the high pressure of air in the lower portion of the power cylinder 17 will open the check valves 70 and allow this air to flow around the pump plunger toward the pump cylinder 19, thus blowing any sand and grit away from the plunger before it enters the packing.

Drain grooves 73 are formed in the bottom of the lower power packing cylinder to collect any condensation therein. A portion of this condensation will be blown upwardly thru the passage 33. Another portion will be blown downwardly thru the passage 69 and employed to wash the pump plunger.

Dash chambers 74 are cut into the upper and lower faces of the piston 21′ so as to receive annular projections 75, at the top and bottom of the cylinder 15. These act to cushion the pistons at the extremities of the stroke and prevent damage by a metal to metal contact. The spool valve 29 is similarly cushioned by being provided with an annular flange at each of its extremities which enter annular dash pots 40 at each limit of its travel.

The valve springs 37 are each compressed between a yoke 83 and a cap 84. The yokes 83 ride on opposite sides of projecting pins 76 upon the spring sleeve 36. The caps 84 are provided with bearings 77 which are maintained in depressions in the inner walls of the valve chamber casting 14. This inner wall is formed by a lower sleeve 78, an upper sleeve 79 and a top sleeve 81. The bearings 77 rest upon the lower sleeve 78. After the bearings have been put in place, the upper sleeve 79 is forced in over them so that they are securely locked in position.

The upper sleeve 79 supports a valve guide plate 80 which is clamped between the upper sleeve 79 and the top sleeve 81. By this arrangement the entire valve mechanism can be reached for repairs or removal by removing the cap 13 and withdrawing the sleeves 78, 79, and 81. The spring sleeve 36 is split so that it can be passed over the upper extremity of the valve rod and clamped about the reduced portion 35 thereof by means of clamp nuts 82, shown in Fig. 9.

A reducer 85, surrounds the intake valve housing 57 so as to allow space around the housing for removing the discharge housing 57 when the clamp nut 59 has been removed.

The term "fluid" herein includes any liquid, gas or vacuum steam.

While a specific form of the improvement has been described and illustrated herein, it

is desired to be understood that the same may be varied, within the scope of the appended claims, without departing from the spirit of the invention.

Having thus described the invention, what I claim and desire secured by Letters Patent is:—

1. A deep well pump comprising an actuating cylinder; a pump cylinder; valve mechanism for controlling the supply of operating fluid to said actuating cylinder; a conduit adapted to extend from the surface to supply operating fluid under pressure to said valve mechanism and a second conduit adapted to extend to the surface to discharge operating fluid from said valve mechanism, said second conduit adapted to pass to the surface through the interior of the first conduit; and means for discharging the pumped fluid into said well about said conduits.

2. A deep well pump comprising a first actuating cylinder; a second actuating cylinder in alignment with said first cylinder; a pumping cylinder below said second actuating cylinder; pistons in said actuating cylinders; a common piston rod connecting said pistons; a pump plunger operatively connected to said piston rod and projecting within said pump cylinder; valving means arranged to control fluid pressure to the upper side of each of said pistons and to the lower side of one of said pistons; and a breather passage communicating with the lower side of the other of said pistons and with the surface so as to relieve the pressure on said lower side at all positions of said pistons.

3. A deep well pump comprising a first actuating cylinder; a second actuating cylinder in alignment with said first cylinder, a pumping cylinder below said second actuating cylinder; pistons in said actuating cylinders; a common piston rod connecting said pistons; a pump plunger operatively connected to said piston rod and projecting within said pump cylinder; valving means arranged to control fluid pressure to the upper side of each of said pistons and to the lower side of one of said pistons; and a breather passage communicating with the lower side of the other of said pistons and with the surface so as to relieve the pressure thereon at all positions of said pistons; and a port operated by said valve arranged to connect the space below the lower side of the first piston with the said breather passage at predetermined times.

4. An assembly for deep well pumps comprising a valve chamber member; a partition block; a first actuating cylinder arranged between said valve chamber member and said partition block; a jacket adapted to secure said chamber member to said partition block so as to lock said first actuating cylinder therebetween; a packing block; a second actuating cylinder placed between said packing block and said partition block; a second jacket locking said packing block to said partition block so as to secure said second actuating cylinder therebetween; a pump valve unit; a pump cylinder positioned between said packing block and said pump valve unit and a third jacket secured to said pump valve unit and said packing block so as to secure said pump cylinder therebetween, a piston rod extending axially through both said actuating cylinders and into said pump cylinder; pistons carried by said rod in said actuating cylinder; and means for supplying pressure to said pistons.

5. In a deep well pump adapted to be placed within a well; an actuating cylinder; a pump cylinder; a piston within said actuating cylinder; a plunger within said pump cylinder arranged to be operated by said piston; a conduit adapted to convey pressure from the surface to one side of the said piston; and a second conduit from the surface adapted to relieve the pressure on the other side of said piston, said second conduit being carried within said first conduit and opening at its upper extremity to the atmosphere and being closed from any liquid source.

6. In a deep well pump having a pump plunger; packing surrounding said pump plunger; a pressure chamber above said packing; means for preventing foreign material from entering said packing, comprising a passage communicating with said pressure chamber and communicating with a space around said pump plunger so as to maintain a pressure in said space to force foreign material from said plump plunger away from said packing; and check valves in said passage to prevent pressure from said space from entering said pressure chamber.

7. In a deep well pump having two actuating cylinders arranged in tandem with a piston in each of said cylinders carried on a common piston rod; valving means adapted to control pressure to alternate sides of one of said pistons and to one of the sides of the other of said pistons and a constantly open passage communicating with opposite side of the latter piston at all times so as to create a low pressure condition on said side at all phases of action of said piston.

8. In a deep well pump the combination of: tubing arranged to extend within a well; pump mechanism secured to the lower end of said tubing; a fluid motor adapted to be operated in all phases of motion by fluid under pressure, said motor being associated with said pump mechanism; an exhaust pipe extending downwardly within said tubing; and means for delivering the discharge of said pump mechanism into said well around said tubing whereby said discharge is conducted to the ground surface by said well;

said exhaust pipe communicating with the atmosphere so as to relieve the pressure within said motor.

9. In a deep well pump the combination of: tubing arranged to extend within a well; pump mechanism secured to the lower end of said tubing; a fluid motor adapted to be operated in all phases of motion by fluid under pressure, said motor being associated with said pump mechanism; a piston within said motor, an exhaust pipe extending downwardly within said tubing; and means for delivering the discharge of said pump mechanism into said well around said tubing whereby said discharge is conducted to the ground surface by said well, said exhaust pipe being constantly open to one side of said piston within said motor.

10. An assembly for deep well pumps comprising: a first actuating cylinder; a valve chamber member closing the upper extremity of said first actuating cylinder; a partition block closing the lower extremity of said first actuating cylinder; a jacket surrounding and spaced from said first actuating cylinder and secured at its extremities to said valve chamber member and said partition block so as to maintain them in position upon said first actuating cylinder; a second actuating cylinder having its upper extremity closed by said partition block; a packing block; a second jacket surrounding and spaced from said second actuating cylinder and secured to said partition block and said packing block so as to maintain them in position on said second actuating cylinder; a pump cylinder carried at its upper extremity in said packing block; a pump valve unit closing the lower extremity of said pump cylinder; and a third jacket surrounding and spaced from said pump cylinder and secured at its extremities to said packing block and said pump valve unit so as to maintain them in position on said pump cylinder.

In testimony whereof, I affix my signature.

CHARLES A. JOY.