April 25, 1967 J. R. SCHNEIDER 3,315,506

WORKPIECE TENSION AND SHAPE CONTROL METHOD AND APPARATUS

Filed Jan. 9, 1964 3 Sheets-Sheet 1

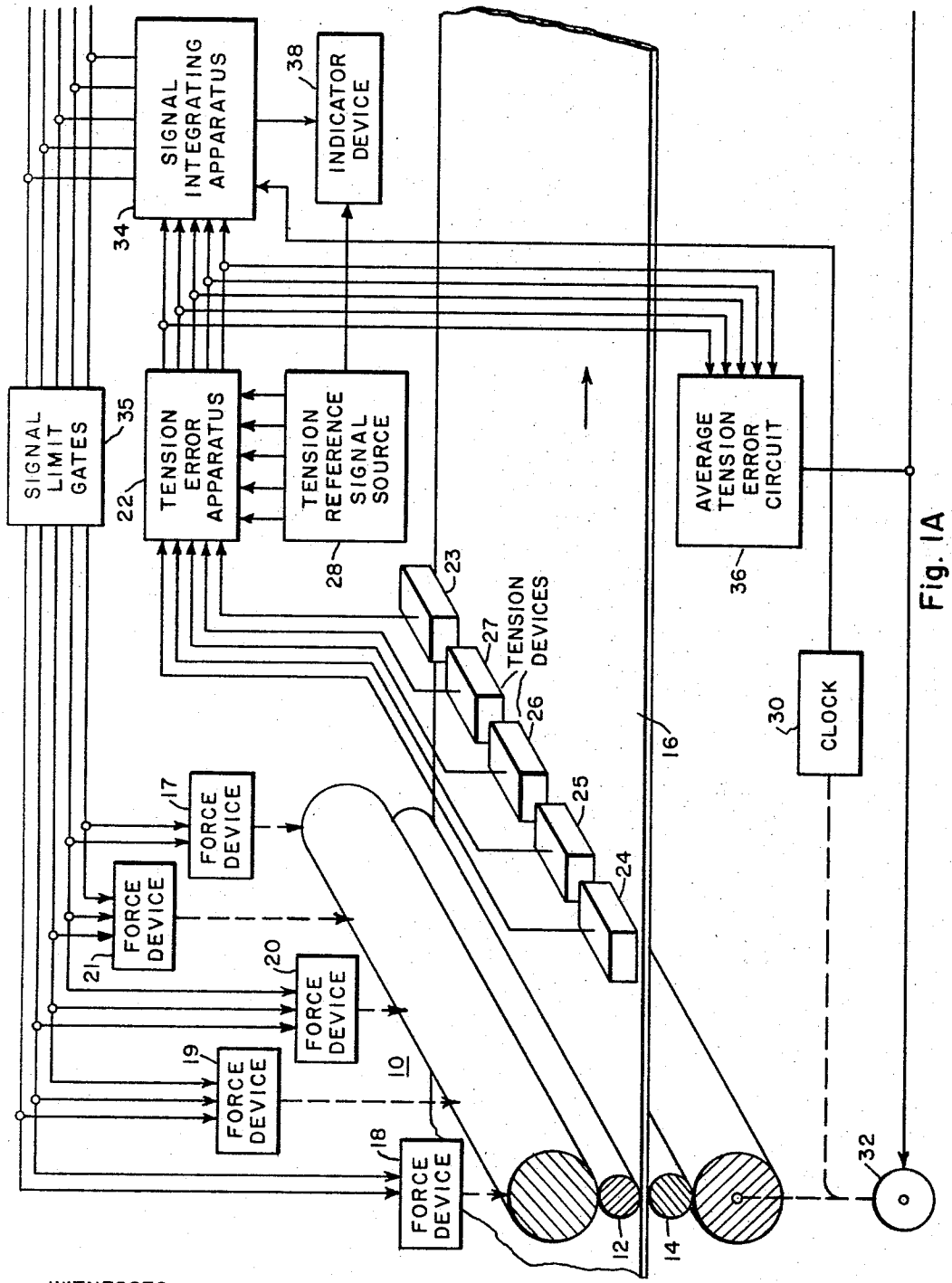

Fig. 1A

WITNESSES

Leon J. Zaya

Leon M. Garman

INVENTOR

John R. Schneider

BY W. W. Brodahl

ATTORNEY

WORKPIECE TENSION AND SHAPE CONTROL METHOD AND APPARATUS

Filed Jan. 9, 1964 3 Sheets-Sheet 2

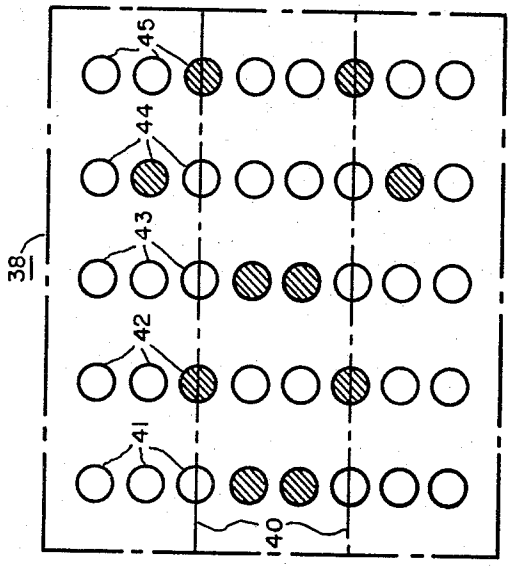

Fig. 2

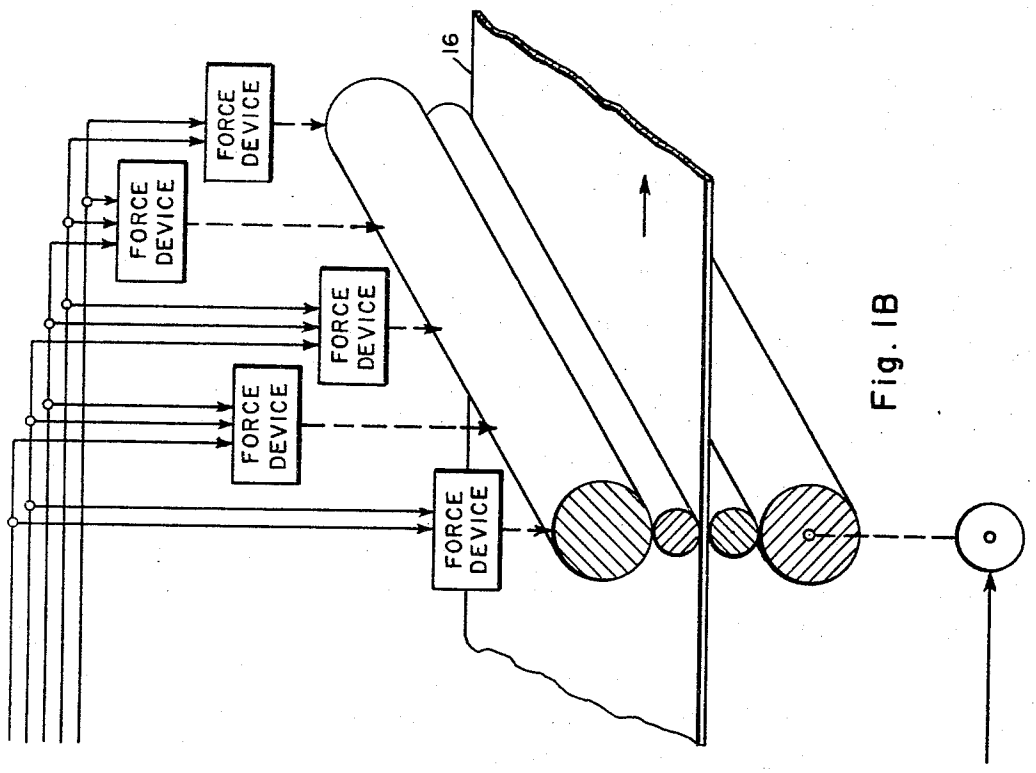

Fig. 1B

April 25, 1967 J. R. SCHNEIDER 3,315,506

WORKPIECE TENSION AND SHAPE CONTROL METHOD AND APPARATUS

Filed Jan. 9, 1964

3 Sheets-Sheet 3

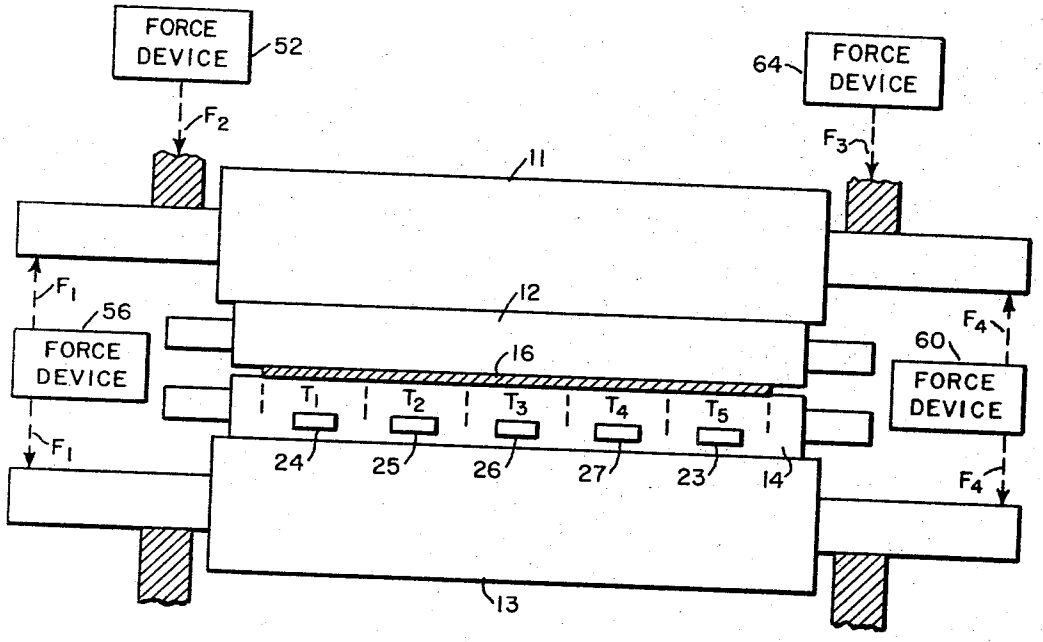

Fig. 3

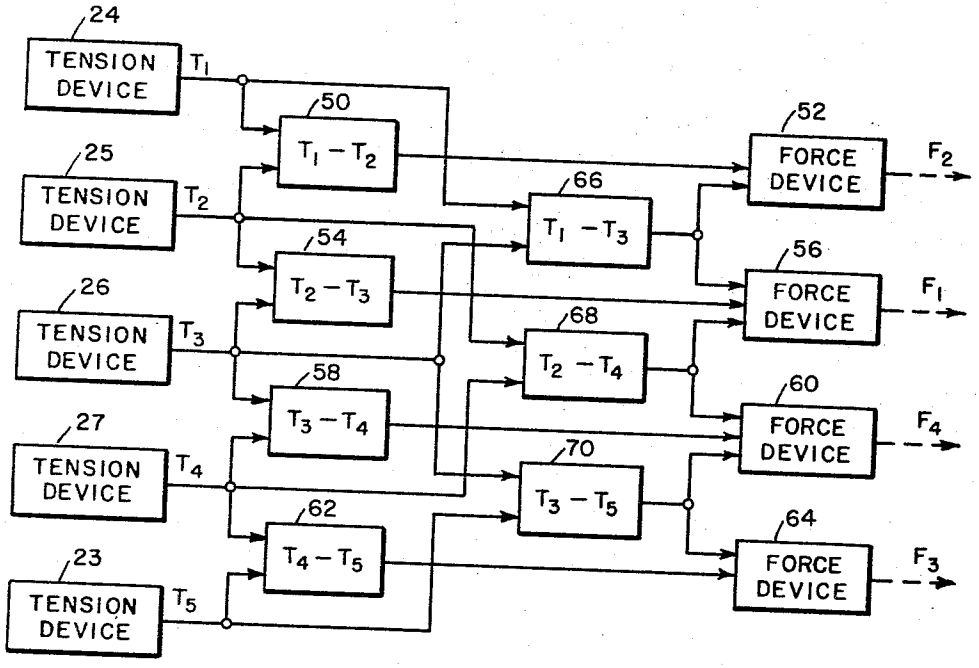

Fig. 4

United States Patent Office 3,315,506 Patented Apr. 25, 1967

3,315,506

WORKPIECE TENSION AND SHAPE CONTROL METHOD AND APPARATUS

John R. Schneider, Franklin Township, Westmoreland County, Pa., assignor to Westinghouse Electric Corporation, East Pittsburgh, Pa., a corporation of Pennsylvania

Filed Jan. 9, 1964, Ser. No. 336,701
6 Claims. (Cl. 72—9)

The present invention relates in general to workpiece tension and shape controlling method and apparatus, and more particularly to workpiece tension and shape control method and apparatus operative with a strip workpiece rolling mill or the like.

It has been known in the prior art to control the tension of a workpiece leaving a rolling mill, for particularly continuous cold mills, by the use of a single workpiece tension measuring device in the form of a transverse roller positioned after a particular stand of the mill, with the output of this device being used to control various operative factors in the control process, such as the interstand strip tension, the stand screwdown setting or the stand roll speed for the purpose of controlling the strip workpiece tension and thereby thickness deviations at this point of measurement. This single tension measuring roller device has been operative such that it measured the total workpiece tension at the measurement position, and in addition provides a measurement of the individual tensions at the respective edges of the workpiece passing through the mill. This prior art tension measurement device has further provided an indication of the tension differential between the two sides of the strip, such that an operator can manipulate one or both of the conventional two screwdown motors to correct any undesired transverse tension differential in this regard. In actual practice there has still resulted various undesired workpiece profiles when considered and taken in a plane transverse to the longitudinal movement of the workpiece. More specifically, the tension and hence the thickness at the edges of the workpiece could be as desired, however, the tensions at other portions across the width of the strip could deviate to the extent that some of the delivered strip workpiece product would have to be scrapped.

It is an object of the present invention to provide an improved workpiece tension and shape control apparatus operative such that the tension errors and hence the shape deviations taken across the profile of the delivered workpiece are minimized.

It is another object of the present invention to provide improved and more stable shape control apparatus for operation with a strip workpiece rolling mill to better control and to make substantially uniform the final delivery shape and cross-sectional thickness of the rolled strip product relative to a desired shape and cross-sectional thickness.

It is a different object to provide improved shape or thickness control apparatus for better controlling the operation of a strip workpiece rolling mill such that the delivery workpiece thickness is more closely in accordance with a desired workpiece thickness and the cross-sectional profile is more in accordance to a desired workpiece profile or shape, and the resultant thickness deviations across this profile are more closely within desired and permitted limits.

In accordance with the present invention, improved shape or thickness control is effected by better controlling the operation of a workpiece rolling mill, such that the rolls are better maintained in a substantially parallel and level position and the roll contour is controlled to provide a desired strip workpiece delivery thickness and shape profile. A plurality of workpiece tension sensing devices,

such as magnetic operative devices or strain gauge contact roller devices, can be located as desired to sense and measure the strip workpiece tension at both the right edge of the workpiece and the left edge of the workpiece and additionally at one or more intermediate locations or portions across the strip width, with the outputs of the tension sensing devices being amplified and compared such that any tension differentials between adjacent locations or portions of the strip workpiece result in a corrective action to cause the two side edges as well as the intermediate portions of the workpiece as delivered from the mill to have substantially the same tensions and as a result substantially the same thickness or shape. In addition, an automatic tension control operation is provided to correct for total tension errors which occur across the whole of the delivered strip workpiece. In this regard, the present invention includes both corrective action taken by adjustment of screwdown control apparatus at the ends of the rolls and in addition includes corrective action by the adjustment of intermediate screwdown control apparatus or other provided means for changing the contour or shape of the roll member itself.

These and other objects and advantages of the present invention will become apparent in view of the following description taken in conjunction with the drawings wherein:

FIGURES 1A and 1B comprise a diagrammatic showing of control apparatus operative in accordance with the present invention;

FIG. 2 illustrates a suitable indicator to show the respective workpiece delivery tensions in the portions of the workpiece shown in FIGS. 1A and 1B;

FIG. 3 is a showing of the work roll and back up rolls of a rolling mill adapted for operation in accordance with a modification of the teachings of the present invention; and

FIG. 4 shows the functional operation of modified control apparatus operative with the rolling mill of FIG. 3.

In FIGS. 1A and 1B, there is shown a workpiece rolling mill stand **10** including an upper roll **12** and a lower roll **14** operative with a strip workpiece **16** moving in the direction of the arrow for determining the final or delivery thickness and shape profile of that strip workpiece **16**. In this regard, a left side screwdown or force device **17** is provided to increase or decrease the effective pressure or force between the upper roll **12** and the lower roll **14** relative to the left edge of the workpiece **16**. A right side screwdown or force device **18** is similarly provided to increase or decrease the effective pressure or force between the upper roll **12** and the lower roll **14** relative to the right edge of the workpiece **16**. The intermediate screwdown or force devices **19**, **20** and **21** are respectively operative relative to the illustrated transverse positions across the width of the strip **16** as well known in a Sendzimer type of mill to increase or decrease as required the pressure or force between the rolls **12** and **14** at their respective operational positions transverse to the movement direction of the strip **16** as shown. There is provided a tension error apparatus **22** operative to energize one or more as may be desired of the screwdown or force devices **17**, **18**, **19**, **20** and **21** for the purpose of correcting any undesired strip tensions and thereby to correct any strip thickness or shape deviation of the workpiece **16** delivered from the rolling mill **10**.

A left tension sensing device **23** is provided to measure the actual tension in the left side edge portion of the workpiece **16** and to provide an actual tension signal T_5 to the tension error apparatus **22** for providing a tension error signal ΔT_5 relative to a desired and reference strip tension previously set into the tension error apparatus **22** for the left edge of the strip **16**; this tension error signal ΔT_5 is now available to correct any thickness or

shape errors in the left edge of the strip workpiece **16** delivered from the rolling mill stand **10**. A right side tension sensing device **24** is similarly operative to provide an actual tension signal T_1 regarding the actual tension in the strip workpiece **16** delivered from the rolling mill stand **10** at the right side edge thereof, and to provide a tension error signal ΔT_1 from the tension error apparatus **22** when this actual tension signal T_1 is compared to a desired or reference strip workpiece tension, which tension error signal ΔT_1 is utilized for the purpose of correcting any undesired tension error in the right edge of the strip workpiece **16**. Intermediate tension sensing devices **25**, **26** and **27** are similarly operative relative to their respective intermediate portions of the strip workpiece for measuring the actual tensions in those portions of the strip workpiece **16** delivered from rolling mill **10** and to provide suitable tension error signals from the respectively provided tension error signal generating circuits of the tension error apparatus **22** for the purpose of correcting any undesired tension errors in those respective portions of the workpiece **16**. It should be noted that after the rolling mill is level such that upper roll **12** substantially parallel to lower roll **14**, the illustrated five portions of the upper roll **12** will be substantially parallel to and equally spaced from the corresponding portions of the lower roll **14** resulting in the same strip thickness being delivered from the rolling mill **10** at the left edge portion, at each intermediate portion and at the right edge portion of the workpiece **16**. The tension sensing devices **23** through **27** illustrated in FIGS. 1A and 1B will then operate to maintain a desired tension relationship between the five strip portions and thereby the control apparatus will maintain a reference delivery thickness from the rolling mill **10**. The strip workpiece **16** passes from the rolling mill stand **10** to a subsequent coiling device or another rolling mill stand to maintain the tension in the strip workpiece.

The tension error apparatus **22** shown in FIGS. 1A and 1B is operative to provide a tension error signal ΔT for each measured portion of the strip workpiece **16** operative with one of the tension sensing devices **23** through **27**. A reference tension signal is supplied for each strip portion by the tension reference signal source **28**, as predetermined by an operator or a control computer coupled to the workpiece shape control apparatus. Suitable prior art signal difference devices, both digital such as a reversible counter and analog such as a summing circuit, are well known in this art that can provide each of these tension error signals from the here provided information. A clock **30** is operative with the mill motor **32** to sense the speed of the rolling mill stand **10** and thereby energize a signal integrating apparatus **34** operative with each of the tension error signals for a time period determined by the clock **30**, such that a sampling control and tension correction operation takes place with each of the respective screwdown devices **17** through **21** to allow a time delay to result in regard to tension error corrections already made and requiring a predetermined time to be effective relative to the tension sensing devices **23** through **27**. Each of the five tension error signals, for example each from a separate digital reversible counter having an up input operative with an actual tension signal and a down input operative with a reference tension signal within the tension error apparatus **22**, is operative with a different signal integrating circuit. For example the desired signal integration can be accomplished by a digital counter or a motor operated rheostat within the signal integrating apparatus **34** to provide a tension error signal to each different one of the screwdown devices **17** through **21**. If desired, individual signal limit gates can be provided to limit any resulting tension or tension change in the strip portions operative with the tension sensing devices **23** through **27** respectively to a magnitude that is safe and will not damage the strip **16** or other equipment involved.

The mill stand motor **32** can be controlled by an average tension signal to provide an overall monitoring of the rolling mill operation relative to a desired reference average tension for the strip **16**. The average tension error circuit **36** includes a suitable reference signal source and a signal summing circuit that is followed by a signal dividing circuit to divide the total of the individual strip portion tension error signals by the number of such signals that were added together. An indicator device **38**, which may be a cathode ray tube display device or the like, is operative with the signal integrating apparatus **34** to provide a separate indication of each of the therein integrated tension error signals, or if desired the actual tension signals from the tension error apparatus **22**.

As shown in FIGS. 1A and 1B, each screwdown or force device is responsive to the tension error signal from the particular tension sensing device as well as the corresponding tension error circuit within the tension error apparatus **22** that are operative relative to the same portion of the strip workpiece as is the screwdown device. In addition the operation of that screwdown device is affected and influenced as desired by the tension error signals relative to the next adjacent portions of the strip workpiece. The reason for this is the influence on each portion of the strip workpiece by screwdown adjustments resulting from tension error corrections made regarding those next adjacent portions of the strip workpiece. This is shown in FIGS. 1A and 1B by the illustrated connections made to the screwdown devices. In this regards, and relative to the display shown in FIGURE 2, if the tension sensing device **26** operative with the tension error apparatus **22** provides a tension error signal ΔT_3 to the screwdown mechanism **20** for decreasing the tension in the strip portion at the middle of the strip **16**, the resulting adjustment of screwdown device **20** will otherwise affect and change the tension of the strip portions adjacent to and on each side of this middle strip portion. Therefore, this same tension error signal ΔT_3, or probably some predetermined lesser portion of the signal such as for example one-third or one-half thereof, is supplied to the adjacent screwdown devices **19** and **21** to substantially reduce and neutralize these undesired changes in the respective tensions of the adjacent strip portions. FIGS. 1A and 1B show the provided interconnections of the supplied tension error signals for this purpose relative to the other screwdown devices as well as screwdown device **20**.

In FIG. 2 there is shown one suitable and alternate form of the indicator device **38**, wherein the general profile of the strip **16** is shown by the desired operation marks or lines **40**, a first row of signal lights **41** is provided to indicate the tension error associated with the tension sensing device **24**, a second row of indicator lights **42** is provided to indicate tthe tension error associated with the tension sensing device **25**, a third row of lights **43** is provided to indicate the tension error associated with the tension sensing device **26**, a fourth row of lights **44** is provided to indicate the tension error associated with the tension sensing device **27**, and a fifth row of indicating lights **45** is operative to indicate the tension error associated with the tension sensing device **23**.

As shown in FIG. 2 for example, the first column of indicator lights **41** shows that the tension in the portion of the strip **16** operative with the tension sensing device **24** is actually above the desired or reference tension shown by the dotted line for this portion of the strip **16**, and therefore the resulting strip thickness is too thin. The second column of indicating lights **42** indicates that the tension in the strip **16** adjacent to the tension sensing device **25** is in accordance with the desired or reference tension for the strip **16**. The third column of indicating lights **43** shows that the tension in the strip portion adjacent the tension sensing device **26** is above the desired or reference tension, and therefore the resulting strip thickness is too thin. The fourth column of indicating

lights 44 shows that the tension in the portion of the strip 16 adjacent the tension sensing device 27 is below the desired or reference tension value, and therefore the resulting strip thickness is too thick. The fifth column of lights 45 shows that the tension in the strip portion adjacent the tension sensing device 23 is substantially in accordance with the desired or reference tension. Thusly, in the operation of the control apparatus shown in FIGS. 1A and 1B for the strip portion adjacent the tension sensing device 24, the tension error apparatus 22 and signal integrating apparatus 34 would provide a correction signal through the screwdown device 18 to decrease the tension in the strip portion operative with the tension sensing device 24, and to the screwdown device 19 to neutralize any resulting and undesired change in the adjacent strip portion. Similarly, the tension control apparatus shown in FIGS. 1A and 1B would decrease the tension in the strip portion operative with the tension sensing device 26, and neutralize any resulting change on the adjacent strip portions. The tension control apparatus shown in FIGS. 1A and 1B would increase the tension in the strip portion operative with the tension sensing device 27, and neutralize any affect on adjacent strip portions operative with screwdown device 20 and screwdown device 17. The provided control apparatus would not in a direct manner substantially change the tension in the strip portions operative with the tension sensing device 25 and the tension sensing device 23 respectively. The indicator shown in FIG. 2 provides a graphic showing of the strip workpiece shape resulting from the actual tensions in the five portions of the strip workpiece operative with the control apparatus of FIGS. 1A and 1B. If the tension in any given strip portion is too high, this will in general cause the thickness and shape thereof to be too thin, and too low a tension will result in too thick a workpiece portion.

The rolling mill shown in FIGS. 1A and 1B is adapted for operation with the control apparatus such as shown in FIGS. 1A and 1B, and could be a well known Sendzimer type of rolling mill. In reference to the rolling mill shown in FIG. 3, the tension sensing device 24 is operative to sense the tension T_1 in the portion of the strip 16 operative with the tension sensing device 24. The other tension sensing devices 25, 26, 27, and 23 are respectively operative with the portions of the strip 16 shown adjacent to those tension sensing devices in FIG. 3 for measuring the actual tensions T_2, T_3, T_4, and T_5 in those respective strip portions. Errors in the tension T_1 can be corrected by changes in the force F_2 shown in FIG. 3, which could be effected by a conventional screwdown device such as the screwdown device 18 shown in FIGS. 1A and 1B. Errors in the tension T_2 can be corrected by a combination of a change in the force F_2 and a change in the force F_1 to effect a bending or change in the contour shape of the upper backup roll 11 and a change in the contour shape of the upper work roll 12. The force F_1 would also effect a change in the shape of the lower backup roll 13 and the lower work roll 14. Errors in the tension T_3 can be corrected by a combination of a change in the force F_2 and the force F_3 as determined by conventional screwdown devices and in addition by a change in the force F_1 and in the force F_4 to effect a desired bending or contour shape change in the provided rolls. Errors in the tension T_4 can be corrected by a combination of a change in the force F_3 and a change in the force F_4. Errors in the tension T_5 can be corrected by a change in the force F_3 shown in FIG. 3.

In FIG. 4 there is illustrated the functional operation of a modification of the present control apparatus suitable for operation with the rolling mill shown in FIG. 3 wherein the tension sensing devices 23 through 27 are shown providing the respective actual tension signals T_1, T_2, T_3, T_4, and T_5. These tension signals are each supplied to a signal differencing device such that a difference or tension differential signal is provided to one of the

force determining devices for controlling the respective forces F_1, F_2, F_3, and F_4 as shown in FIG. 3. More specifically the tension devices 24 and 25 provide respectively the actual tension signals T_1 and T_2 which are supplied to the signal difference device 50 for providing a tension difference signal to the force device 52 and having the proper magnitude and polarity for controlling the force F_2 applied to the right side of the mill rolls as shown in FIG. 3. Similarly the tension devices 25 and 26 provide the respective actual tension signals T_2 and T_3 which are differenced in the signal difference device 54 for providing a control signal to the force device 56 for determining the force F_1 applied to determine the contour shape or bending of the provided rolls. The tension devices 26 and 27 provide the respective actual tension signals T_3 and T_4 which are supplied to a signal difference device 58 for determining the operation of force device 60 and thereby the provided force F_4. The tension devices 27 and 23 provide the respective actual tension signals T_4 and T_5 which are supplied to a signal difference device 62 for determining the operation of force device 64. In addition the actual tension signals T_1 and T_3 are supplied to a signal difference device 66 for determining the operation of force devices 52 and 56. The signals T_2 and T_4 are supplied to a signal difference device 68 for determining the operation of force device 56 and force device 60. The signals T_3 and T_5 are supplied to a signal difference device 70 for determining the operation of force device 60 and force device 64. In this respect the force devices 52, 56, 60, and 64 could be electric motor operated screw devices or could be hydraulic fluid pressure actuated cylinder type of force providing devices as may be desired.

Further, if desired, the tension reference signal source 28 shown in FIGS. 1A and 1B can be operative with provided tension error apparatus connected between the tension devices and the respective signal difference devices shown in FIG. 4 to supply tension error signals to the latter devices instead of actual tension signals.

It is generally known that the cold rolling of sheet and strip workpieces has been considered an art mainly because the human operator must be able to judge by eye or by touch the shape of the strip workpiece he is rolling. When the strip workpiece is deformed in shape enough that a human operator can see the deformation, he has then to make the necessary adjustments to the screwdown setting of the mill or to the speed of the roll motors to correct the strip workpiece shape deformation. The past practice was for the operator to test the strip shape by visually sighting the shape deformation or by pressing his finger against the taut strip to try and judge by feel which portion of the strip is the looser and thereby has the lower tension. The final judgment of strip workpiece shape comes when the rolling tension is released on the strip and the material relaxes such that the undesired waves and wrinkles therein can be observed. When the strip workpiece shape is sufficiently deformed so as to alert the human operator through one of the latter methods of sensing, it is already too late to correct the strip shape and even the best prior art shape correction procedures can only hope to produce an acceptable finished product over a partial length of the rolled strip workpiece. Further evidence that the visual control method now prevalent is inadequate is that quite often a strip will tear completely in half because of undetected excessive tension on one of the two edges of the strip as developed during the rolling operation.

In accordance with the teachings of the present invention and to eliminate the undesirable prior art control methods just described, the strip workpiece tension is measured at a number of locations transverse and across the width of the strip workpiece. This is accomplished by providing a plurality of tension sensing devices, such as strain gauges or magnetic vibration sensing apparatus, across the width of the strip workpiece just after it leaves

the work rolls of a given mill stand. These tension sensing devices can operate with the strip through contact rollers of predetermined and desired width for providing an optimum measurement of the tension within a given portion of the strip, with each roller being of the same uniform height across the width of the strip when the strip is not present and in contact with the rollers. The initial uniformity of the strip tension sensing rollers is maintained by supporting them on a rigid structural framework, and this uniformity exists only when there is no strip in tension and in contact with the tension sensing rollers. When a strip workpiece in tension is in contact with the rollers, the strip exerts a force against each roller individually and depending upon the tension present in the portion of the strip in contact with the tension sensing roller to thereby force down on each of those rollers with a different force. This force can be measured electrically with a provided strain gauge. The respective tension errors in the form of electrical output signals from the various tension sensing devices, and compared with provided reference tension signals can be supplied to an indicating device such as shown in FIG. 2 and visible to the mill operator to provide a visual indication of the errors in tensions present in the respective portions of the strip while the strip is being rolled. The control apparatus shown in FIGS. 1A and 1B provides automatic adjustment of the tension in the respective strip portions and thereby corrects resulting errors in the shape of the roller strip.

The control apparatus shown in FIGS. 1A and 1B will improve the delivered strip shape by alerting the mill operator to undesired changes in the tension in the respective strip portions across the width of the strip **16** to allow the operator to adjust the mill manually, or the control apparatus can effect the automatic adjustment of the mill as necessary to maintain a uniform and desired strip shape. As a result of this shape improvement the control apparatus shown in FIGS. 1A and 1B will allow the operator to run the rolling mill faster and to increase the tonnage output of the mill by a considerable margin. Further, it will eliminate the major cause of strip breakage in the operation of a rolling mill, namely uneven tension at the edges of the strip such that one edge has a substantially greater tension than the other edge, and it will permit automatic shutdown of the rolling mill or limit screwdown changes if any actual tension in a given strip portion exceeds the predetermined maximum values and thereby eliminates potential breakage of the strip workpiece **16**.

With the prior art control apparatus a substantial amount of misshaped strip workpiece had to be removed and scrapped, and the prior art practice required rolling loose strip edges to result in waved edges as a safeguard against strip breakage and this should no longer be necessary.

In the operation of the control apparatus shown in FIGS. 1A and 1B each of the tension sensing devices **23** through **27** provides an indication of the actual tension in the respective portions of the strip **16** operative with those tension sensing devices. These individual actual tension signals are supplied to the tension error apparatus **22**, where comparisons are made with the respective tension reference signals provided by the tension reference signal source **28**. In this manner, individual tension error signals are generated in accordance with the difference between each individual actual tension and the corresponding reference tension signal for each of the portions of the strip workpiece **16** operative with the respective tension sensing devices **23** through **27**. These tension error signals are supplied to the average tension error signal circuit **36** where they are added together and divided by the number of such signals for providing an average tension error signal to correct the operation of the mill motor **32**. In addition, they are supplied to individual integrating circuits within the signal integrating apparatus **34** for providing integrated tension error signals through the signal limit gates **35** for controlling the operation of the respective screwdown mechanisms **17** through **21** as shown in FIGS. 1A and 1B. The function of the signal limit gate is to limit each supplied tension error signal to below a predetermined maximum and safe value such that breakage or tearing of the strip workpiece **16** will not thereby result.

The indicator device **38** shown in FIG. 2 is provided to give the operator a visual indication of the tension error conditions in the respective portions of the strip workpiece **16** operative with the tension sensing devices **23** through **27**.

In FIGS. 3 and 4 there is shown a modified control means for correcting errors in the tensions of the respective portions of the strip workpiece **16**, such that tension differentials are generated and applied to correct the screwdown adjustment of the rolling mill through control of the forces F_2 and F_3 and in addition to correct the shape or bending contour of the rolls through control of the forces F_1 and F_4.

The clock **30** shown in FIG. 1 is provided and operative to periodically recycle the operation of the signal integration apparatus **34** to compensate for the time delay necessary for the effect of tension corrections previously made to be realized and sensed by the tension sensing devices **23** through **27**.

It should be understood that the present invention is not limited to the use of five tension sensing devices **23** through **27** as shown in FIGS. 1A and 1B and instead a greater or lesser number of devices could be used to obtain a suitable and desired measurement of the tension relationships within the strip workpiece **16**. Or, if desired, a single tension sensing device could be operative with the strip workpiece **16** and provided with a mechanical support member which travels across the strip workpiece **16** and is operative through an electrical sequencing mechanism such that the strip tension measurements could be made in a predetermined sequence as desired at any interim points along the width of the strip workpiece **16**.

In FIGS. 1A and 1B there are also shown suitable circuit connections from the signal integrating device **34**, as well as the average tension error circuit **36**, to feed forward the generated tension error signals to the next succeeding rolling mill stand for the purpose of anticipating desired changes and corrections in the operation of that succeeding mill stand such that shape and thickness errors in the portions of the strip workpiece already passed through the preceding mill stand **10** and sensed by one or more of the tension sensing devices **23** through **27** can be corrected when passed through that succeeding rolling mill stand.

Although the present invention has been described with a certain degree of particularity, it should be understood that the present disclosure has been made only by way of example and that numerous changes in the details of construction and the combination and arrangement of parts may be resorted to without departing from the scope and the spirit of the present invention. For example, it is within the scope of the present invention to substitute strip thickness sensing devices such as X-ray gauges or well known roll force sensing devices for the tension sensing devices **23** to **27** shown in FIGS. 1A and 1B, and then to operate in respect to the so provided thickness error signals if desired for the purpose of controlling the strip delivery shape or profile from each rolling mill stand.

I claim as my invention:

1. Strip workpiece shape control apparatus operative with a rolling mill having first and second strip workpiece tension controlling means, and including first strip tension sensing means for providing a first control signal in accordance with the tension error of said strip workpiece in a first portion of said strip workpiece, second

strip tension sensing means for providing a second control signal in accordance with the tension error of said strip workpiece in a second portion of said strip workpiece, third strip tension sensing means for providing a third control signal in accordance with the tension error of said strip workpiece in an intermediate portion between said first and second portions of said strip workpiece, first control means operative with said first strip workpiece tension controlling means and responsive to a predetermined combination of said first control signal and said third control signal for correcting the tension error in said first portion of the strip workpiece, and second control means operative with said second strip workpiece tension controlling means and responsive to a predetermined combination of said second control signal and said third control signal for correcting the tension error in said second portion of the strip workpiece.

2. In workpiece tension control apparatus operative with a workpiece rolling mill having a work roll and left side tension control means and right side tension control means and work roll shape control means and being operative to provide a desired workpiece profile delivered from said rolling mill, the combination of first tension error sensing means operative with a first portion of the workpiece at the left side of said mill for providing a first tension error signal, second tension error sensing means operative with a second portion of the workpiece at the right side of said mill for providing a second tension error signal, third tension error sensing means operative with a third portion of the workpiece intermediate of the sides of said mill for providing a third tension error signal, first tension correction means responsive to a combination of said first error signal and at least one of said second error signal and said third error signal and operative with said left side tension control means for correcting any tension error sensed in said first portion of the workpiece, second tension correction means responsive to said second error signal and at least one of said third error signal and said first error signal and operative with said right side tension control means for correcting any tension error sensed in said second portion of the workpiece, and third tension correction means operative with said work roll shape control means and responsive to said third error signal and at least one of said first and second error signals for changing the shape of said work roll to correct any tension error in at least said third portion of the workpiece.

3. In workpiece shape control apparatus operative with a strip rolling mill having a left side shape control means and a right side shape control means at least one intermediate shape control means, the combination of first strip condition sensing means for providing a first error signal in accordance with a first condition error of said strip relative to the left side of said mill, second strip condition sensing means for providing a second error signal in accordance with a second condition error of said strip relative to the right side of said mill, third strip condition sensing means for providing a third error signal in accordance with a third condition error of said strip relative to an intermediate part between the left side and the right side of said mill, first condition control means connected with said left side shape control means and responsive to said first error signal and at least one of said second and third error signals for correcting said first condition error, second condition control means connected with said right side shape control means and responsive to said second error signal and at least one of said first and third error signals for correcting said second condition error, and third condition control means operative with said intermediate shape control means and responsive to said third error signal and at least one of said first and second error signals for correcting said third condition error.

4. The method of controlling the delivery shape of a workpiece from a rolling mill and comprising the steps of measuring the actual tension in the workpiece respectively in each of a plurality of workpiece portions transverse to the movement direction of the workpiece and relative to the desired workpiece tension in each of said portions, generating a tension error control signal in accordance with the tension error for each of said plurality of portions, generating a tension correction signal for each of said plurality of portions by comparing the tension error control signal for each portion with the tension error signal for at least one adjacent portion of the workpiece, and making the required change in the operation of said rolling mill to remove the tension error in each of the respective portions in response to the corresponding tension correction signal generated.

5. The method of controlling a predetermined delivery condition of a workpiece from a rolling mill stand and comprising the steps of measuring the actual condition of the workpiece respectively in each of a plurality of delivered workpiece portions transverse to the movement direction of the workpiece and relative to the desired workpiece condition in each of said portions, generating a condition error control signal in accordance with the condition error for each of said plurality of portions in relation to the condition error of at least one adjacent workpiece portion, and making the required change in the operation of said rolling mill relative to each of said workpiece portions to remove the condition error in each of the respective portions in response to the corresponding condition error signal generated.

6. Strip workpiece shape control apparatus operative with a rolling mill having at least first and second workpiece tension controlling means and including first strip tension sensing means for providing a first control signal in accordance with the tension error of said strip workpiece in a first portion of said strip workpiece, second strip tension sensing means for providing a second control signal in accordance with the tension error of said strip workpiece in a second portion of said strip workpiece, third strip tension sensing means for providing a third control signal in accordance with the tension error of said strip workpiece in an intermediate portion of said strip workpiece, first control means operative with said first strip workpiece tension controlling means and responsive to a predetermined combination of at least a first pair of said control signals for correcting the tension error in said first portion of the strip workpiece, and second control means operative with said second strip workpiece tension controlling means and responsive to a predetermined combination of at least a second pair of said control signals for correcting the tension error in said second portion of the strip workpiece.

References Cited by the Examiner

UNITED STATES PATENTS

2,323,818	7/1943	Lessmann	72—11
2,684,001	7/1954	Wilson	72—8
3,081,651	3/1963	Roberts	72—9
3,213,655	10/1965	Reid	72—11

CHARLES W. LANHAM, *Primary Examiner.*

L. A. LARSON, *Assistant Examiner.*