Dec. 1, 1964 M. S. KANBAR ETAL 3,158,887

CLEANER ROLLER-TYPE ASSEMBLY FOR PICKING UP DUST, LINT AND THE LIKE

Filed Sept. 3, 1963

Fig. 1.

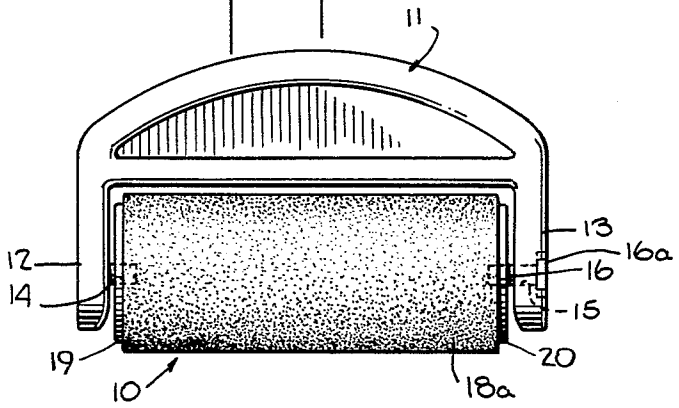

Fig. 2.

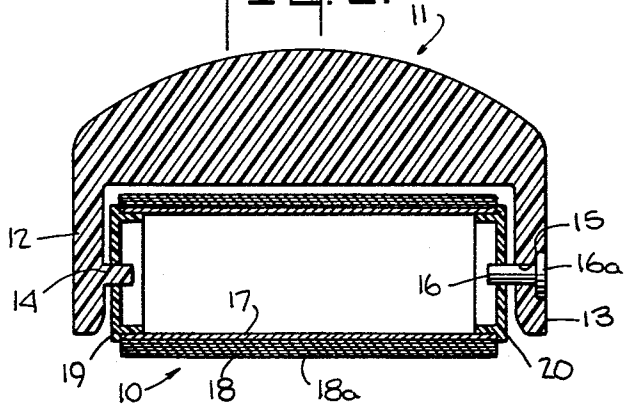

Fig. 3.

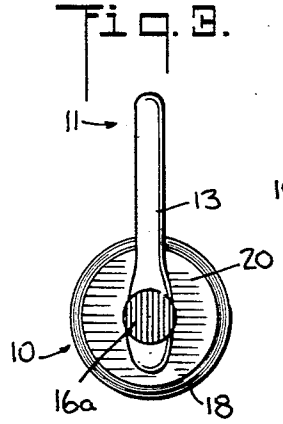

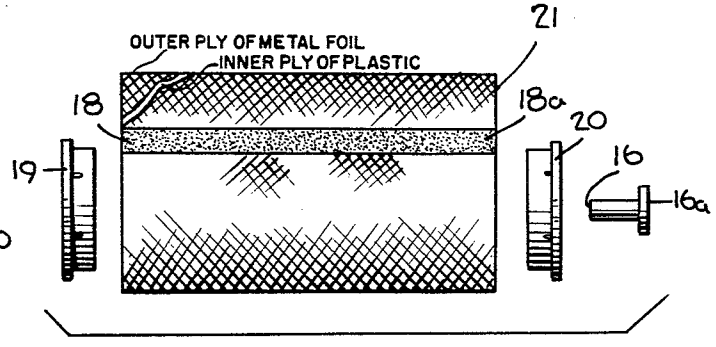

Fig. 4.

INVENTORS
Maurice S. Kanbar &
Malcolm Foster
BY Michael Ebert
ATTORNEY

United States Patent Office

3,158,887

Patented Dec. 1, 1964

3,158,887

CLEANER ROLLER-TYPE ASSEMBLY FOR PICKING UP DUST, LINT AND THE LIKE

Maurice S. Kanbar, 105 E. 15th St., and Malcolm Foster, 440 E. 57th St., both of New York, N.Y.

Filed Sept. 3, 1963, Ser. No. 305,975

1 Claim. (Cl. 15—104)

This invention relates generally to roller-type cleaners having an adhesive surface adapted to pick up lint, dust and other foreign matter as the roller is passed over the surface to be cleaned, and more particularly to a refillable roller assembly of sturdy, efficient and exceptionally simple construction.

Roller assemblies are known which make use of cylinders having an adhesive layer and provided with a handle to permit the user to run the cylinder across a fabric or other surface to remove lint and other foreign material therefrom. Such assemblies operate effectively until such time as the adhesive layer is covered with dirt, at which point it is necessary to provide a fresh layer. With conventional assemblies, it is difficult for the user to replace the dirt-covered layer with a clean layer. Moreover, where the layer is drawn from a roll of adhesive tape contained within the cylinder, and the roll is used up, it becomes still more difficult to insert a new roll within the cylinder.

Accordingly, it is the main object of this invention to provide a cleaning roller assembly for rolling away lint, pet hairs and dust from fabric and suede articles, as well as from upholstery and various other surfaces, the assembly having an adhesive tape roller which may be readily replaced.

More specifically, it is an object of the invention to provide a refill for a roller assembly of the above type wherein adhesive tape is reverse-wound on a cylinder to expose the adhesive surface, the refill being insertable within a yoke-shaped handle.

A further object of the invention is to provide a roller assembly of simple, sturdy and efficient design which may be manufactured at low cost.

Briefly stated, these objects are accomplished in a roller assembly constituted by a yoke-shaped handle having a pair of resilient arms, one of which is provided with a fixed bearing pin and the other of which is provided with an aperture to receive a retractable bearing pin. A replaceable roller in the form of a tube having a roll of adhesive tape reverse-wound thereon, is enclosed at either end by removable caps having central apertures therein to admit said bearing pins. In use, when the tape on the roller is exhausted, the removable bearing pin is pulled out to permit withdrawal of a roller from between the flexible arms, and a refill is then installed, after which the bearing pin is re-inserted to hold the refill in place.

For a better understanding of the invention as well as other objects and further features thereof, reference is made to the following detailed description to be read in conjunction with the accompanying drawing, wherein:

FIG. 1 is a plan view of a roller assembly in accordance with the invention;

FIG. 2 is a longitudinal section taken through the assembly;

FIG. 3 is an end view of the assembly; and

FIG. 4 is a separate view showing a refill and the enclosure caps therefor.

Referring now to the drawing, the roller assembly in accordance with the invention is constituted by a roller, generally designated by numeral 10, rotatably mounted on a handle 11. Handle 11 is preferably formed or molded of a light-weight plastic material, and is constituted by a U-shaped yoke having a pair of arms 12 and 13 extending from an arched base adapted to be held in

the hand of a user whereby the roller may be rolled over a surface to be cleansed.

Projecting inwardly from arm 12 and integral therewith is a bearing pin 14, the pin being in alignment with a bore 15 in arm 13 which is adapted to receive a retractable bearing pin 16, having a disc-shaped head 16*a* to facilitate gripping. Head 16*a* of the bearing pin is received within a recess in arm 13 whereby when the pin is inserted in bore 15, the head lies flush with the arm surface. The roller 10, which is supported by the pins, is comprised of an open-ended tube 14 formed of spiral-wound cardboard or other inexpensive material, onto which is reverse-wound a pressure-sensitive adhesive tape 18 whose adhesive layer 18*a* is exposed, rather than its backing layer.

The ends of the tube 17 are enclosed by a pair of caps 19 and 20. Each cap is formed by a sleeve which telescopes snugly within the tube and a disc which lies against the edge of the tube and is provided with an opening to receive a bearing pin. The caps 19 and 20 are preferably made of the same material as the handle, and are easily removed from the tube.

The roller 10 is replaceable by means of a refill, which as shown separately in FIG. 4, is provided with a protective sheet 21. Sheet 21 is formed of a laminated foil material whose outer metallic ply presents an attractive cover for the refill and whose inner ply is of a plastic material which contacts the surface of the tape. The sheet is embossed so as to form its surface into an array of small dimples whose convex portions only adhere to the tape, thereby facilitating the stripping off of the sheet after the roller is put in place on the handle.

In practice, when the adhesive layer on the tape 18 is covered with lint or dirt, the soiled portion is torn off from the tape to expose a fresh layer. When the tape is exhausted, a refill roller is inserted. This is accomplished by pulling out the retractable pin 16 and then withdrawing the used roller. The arms 12 and 13, which are of plastic, have sufficient give or resilience to allow the used roller to be withdrawn from the fixed bearing pin 14.

The caps 19 and 20 are then pulled off the used roller and pushed into the refill roller, after which it is only necessary to place the capped refill within the handle arms and re-insert the pin 16. In practice, the retractable pin 16 may be spring-mounted, whereby it can be pulled out to release the roller and then let go to re-enter the bearing hole of a refill.

While there has been shown what is considered a preferred embodiment of a cleaning roller assembly in accordance with the invention, it will be manifest that many changes and modifications may be made therein without departing from the essential spirit of the invention. It is intended, therefore, in the annexed claim to cover all such changes and modifications as fall within the true scope of the invention.

What is claimed is:

A cleaner roller-type assembly for picking up dust, lint and the like by passing the roller over the surface to be cleaned, said assembly comprising a yoke-shaped plastic handle having a pair of resilient arms extending in spaced parallel relation, one arm having an inwardly extending bearing pin formed thereon, the other arm having a bore in registration with said pin, a retractable pin insertable in said bore, and a replaceable roller mounted on said bearing pins, said roller being constituted by an open-ended tube having a pressure-sensitive tape reverse-wound thereon with its adhesive coating exposed to form a dirt pick-up layer which is renewable by peeling off the soiled portion of the tape, and removable caps enclosing the ends of said tube, said caps having central journal openings to receive said pins, said caps being formed by a sleeve telescoping in the end of the tube and at-

tached to an apertured disc lying against the edge of the tube, said roller being in refill form with a protective sheet wound about the tape which may be stripped off to expose the tape, said sheet being formed of a laminated metallic foil and plastic material having a dimpled surface to reduce the surface area in contact with the tape thereby facilitating removal of the sheet, the plastic inner ply engaging the surface of the tape, the metallic ply being exposed.

References Cited by the Examiner

UNITED STATES PATENTS

243,248 6/81 Hall.

1,815,785 7/31 Leimberger ..... 242—55.2
2,359,314 10/44 Klein et al.
2,624,060 1/53 McKenzie ..... 15—104
3,070,102 12/62 MacDonald ..... 15—227 X

FOREIGN PATENTS

409,586 5/34 Great Britain.
891,740 3/62 Great Britain.
1,007,211 4/57 Germany.

CHARLES A. WILLMUTH, *Primary Examiner.*