(19) Europäisches Patentamt
European Patent Office
Office européen des brevets

(11) EP 0 938 249 A3

(12) EUROPEAN PATENT APPLICATION

(88) Date of publication A3:
16.08.2001 Bulletin 2001/33

(43) Date of publication A2:
25.08.1999 Bulletin 1999/34

(21) Application number: **99301198.0**

(22) Date of filing: **18.02.1999**

(51) Int Cl.[7]: **H05G 1/02**, H01J 35/10, H05G 1/04

(84) Designated Contracting States:
AT BE CH CY DE DK ES FI FR GB GR IE IT LI LU MC NL PT SE
Designated Extension States:
AL LT LV MK RO SI

(30) Priority: **20.02.1998 US 26709**

(71) Applicant: **Marconi Medical Systems, Inc.**
Highland Heights, Ohio 44143 (US)

(72) Inventor: **Panasik, Cheryl L.**
Elburn, Illinois 60119 (US)

(74) Representative: **Waters, Jeffrey**
Marconi Intellectual Property
Marrable House
The Vineyards
Gt. Baddow
Chelmsford Essex CM2 7QS (GB)

(54) X-ray tubes

(57) An x-ray tube includes an envelope (16) defining an evacuated chamber (29) in which an anode assembly (20) is rotatably mounted to a bearing assembly (44) and interacts with a cathode assembly (22) for production of x-rays. The bearing assembly includes a bearing housing and a plurality of bearings disposed on an outer surface of the bearing housing. A cooling channel is defined within the bearing assembly and directs cooling fluid such as oil across an inner surface of the bearing housing. As the cooling fluid flows adjacent the inner surface of the bearing housing, heat from the bearing housing is absorbed by the cooling fluid thereby reducing the heat transferred to the bearings.

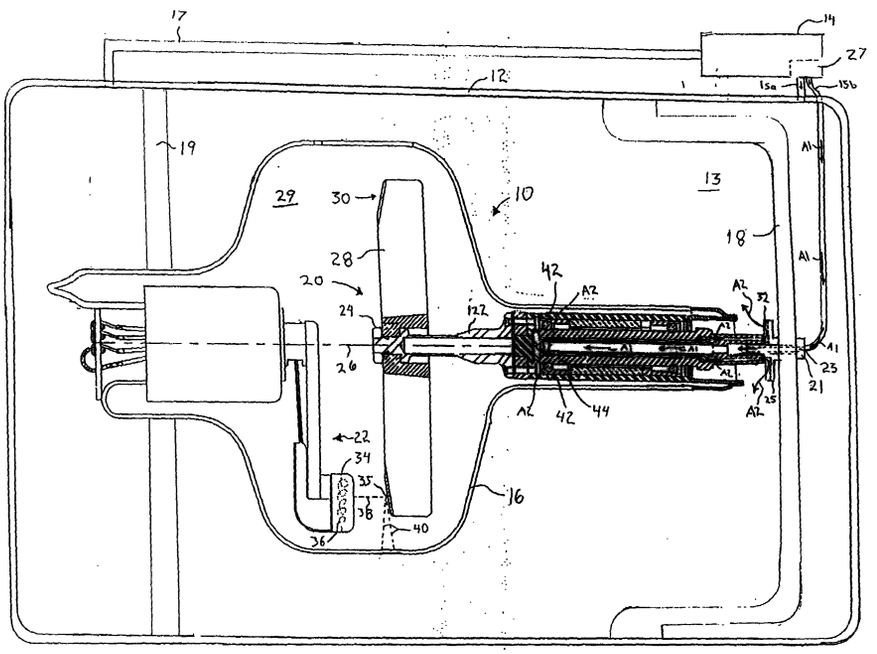

Fig. 1

EP 0 938 249 A3

European Patent Office

EUROPEAN SEARCH REPORT

Application Number
EP 99 30 1198

DOCUMENTS CONSIDERED TO BE RELEVANT

Category	Citation of document with indication, where appropriate, of relevant passages	Relevant to claim	CLASSIFICATION OF THE APPLICATION (Int.Cl.6)
X	DE 87 13 042 U (SIEMENS AG) 26 January 1989 (1989-01-26) * figure 4 * ---	1-14	H05G1/02 H01J35/10 H05G1/04
X	US 5 541 975 A (ANDERSON WESTON A ET AL) 30 July 1996 (1996-07-30) * abstract; figure 1 * * column 8, line 3 - line 9 * -----	1-4, 10-14	

TECHNICAL FIELDS SEARCHED (Int.Cl.6)

H01J
H05G

The present search report has been drawn up for all claims

Place of search	Date of completion of the search	Examiner
THE HAGUE	21 June 2001	Oestreich, S

CATEGORY OF CITED DOCUMENTS

X : particularly relevant if taken alone
Y : particularly relevant if combined with another document of the same category
A : technological background
O : non-written disclosure
P : intermediate document

T : theory or principle underlying the invention
E : earlier patent document, but published on, or after the filing date
D : document cited in the application
L : document cited for other reasons

& : member of the same patent family, corresponding document

EPO FORM 1503 03.82 (P04C01)

ANNEX TO THE EUROPEAN SEARCH REPORT ON EUROPEAN PATENT APPLICATION NO. EP 99 30 1198

This annex lists the patent family members relating to the patent documents cited in the above-mentioned European search report. The members are as contained in the European Patent Office EDP file on
The European Patent Office is in no way liable for these particulars which are merely given for the purpose of information.

21-06-2001

Patent document cited in search report	Publication date	Patent family member(s)	Publication date
DE 8713042 U	26-01-1989	NONE	
US 5541975 A	30-07-1996	EP 1047100 A	25-10-2000
		EP 0688468 A	27-12-1995
		JP 8507647 T	13-08-1996
		WO 9519039 A	13-07-1995

EPO FORM P0459

For more details about this annex : see Official Journal of the European Patent Office, No. 12/82