Oct. 4, 1955 M. D. ARCHANGELI 2,719,515

VALVE GEAR MECHANISM

Filed Jan. 24, 1951

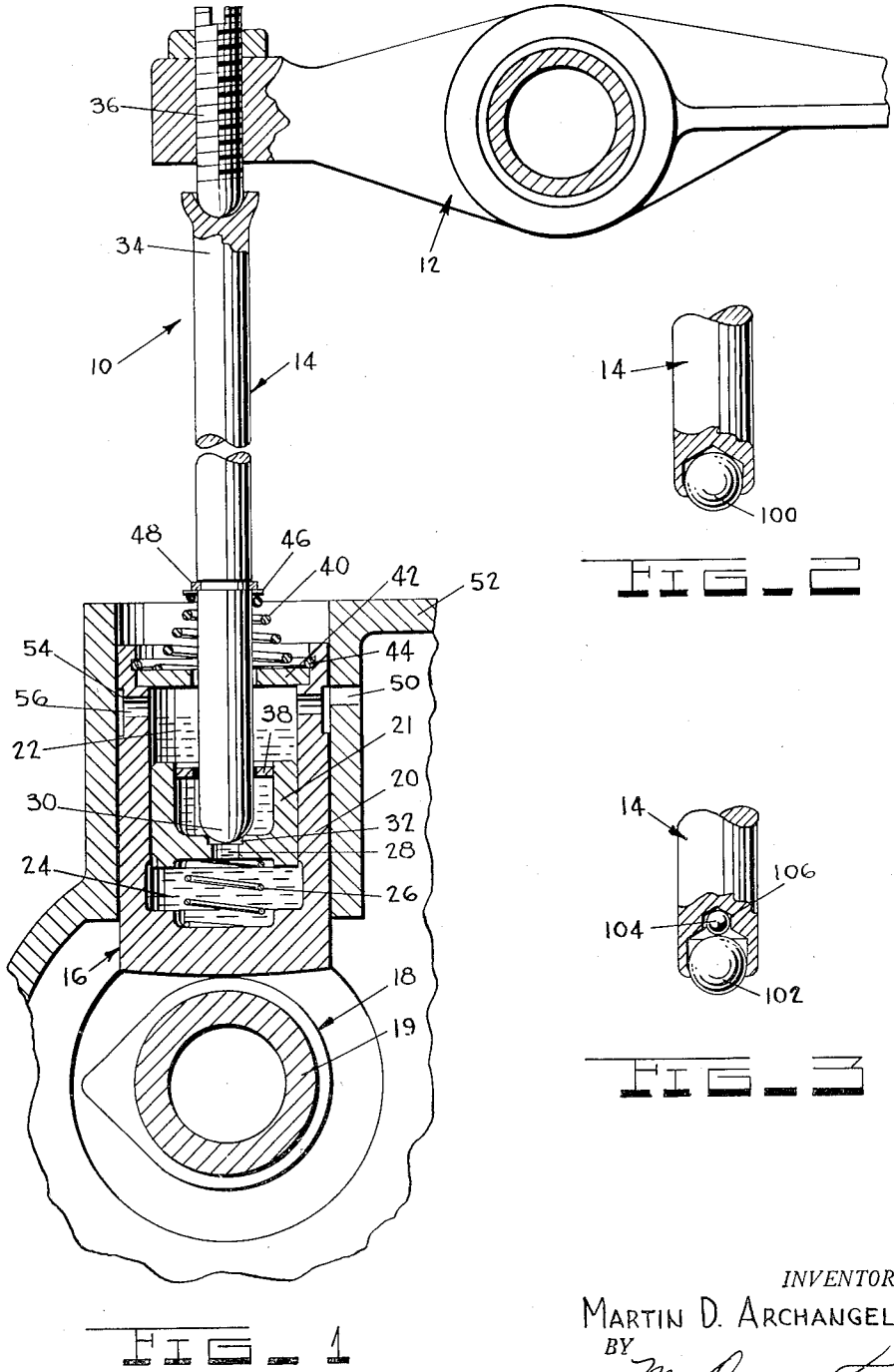

FIG. 1

FIG. 2

FIG. 3

INVENTOR.

MARTIN D. ARCHANGELI

BY

McDonald & Fragno

ATTORNEYS

United States Patent Office 2,719,515 Patented Oct. 4, 1955

2,719,515

VALVE GEAR MECHANISM

Martin D. Archangeli, Birmingham, Mich., assignor to Eaton Manufacturing Company, Cleveland, Ohio, a corporation of Ohio

Application January 24, 1951, Serial No. 207,463

8 Claims. (Cl. 123—90)

This invention relates to valve gear mechanism for internal combustion engines and the like and more particularly to a hydraulic tappet device therefor.

Broadly the invention comprehends the provision of a hydraulic tappet for use generally in valve gear mechanisms of internal combustion engines utilizing one end of a push rod of the valve gear mechanism as a means for controlling the flow of liquid in one direction to the compression chamber of the tappet.

Among the objects of the invention is the provision of a hydraulic tappet of the type utilizing a thrust member therefor as the valve member for controlling the flow of liquid to the compression chamber thereof that is simple of construction, and that employs one end of the push rod of a valve gear mechanism of which it forms a part of the valve member.

Other objects and advantages of the invention will appear from the following description taken in connection with the drawings forming a part of the specification, and in which:

Fig. 1 is a fragmentary partly broken away and partly cross-sectional view of a valve gear mechanism incorporating a hydraulic tappet of novel construction, forming the basis of the invention;

Fig. 2 is a fragmentary partly broken away view of a modified form of push rod from that incorporated in the structure of Fig. 1; and

Fig. 3 is a fragmentary partly broken away view of a further modified form of push rod.

The invention is directed at the provision of a hydraulic tappet of the type employing a thrust member thereof as the valve means controlling flow of liquid to the compression chamber thereof but with the added innovation of having the conventionally utilized push rod of a valve gear mechanism serve also in the capacity as the valve means for the tappet. In this manner the overall structure of the tappet is simplified in connection with its use in a valve gear mechanism and the thrust of the tappet is directly transmitted from the piston reaction element of the tappet by way of the push rod to the other members constituting a part of the valve gear mechanism.

Referring to the drawings for more specific details of the invention **10** represents generally a valve gear mechanism for an internal combustion engine comprising basically as members thereof, a rocker arm **12**, a push rod **14**, a hydraulic tappet **16** and a cam **18** forming part of a camshaft **19**.

The tappet **16** comprises a hollow cylindrical body **20** closed at one end and open at its other end, a piston **21** reciprocable in the hollow of the body **16** with predetermined wall clearance therebetween defining within the body low and high pressure chambers **22** and **24** respectively, a light coil spring **26** in the chamber **24** biasing the piston away from the body.

The push rod **14** operates in the dual capacity as a thrust member between the rocker arm **12** and tappet **16** and as the valve means controlling the passage of

liquid in one direction, through control opening **28** in piston **21** providing communication between the high and low pressure chambers. One end **30** of the push rod is spherical in shape adapted to seat in an annular valve seat **32** formed at the low pressure chamber terminus of opening **28** whereas the opposite end **34** of the push rod has a socket therein for receipt of an adjustment screw **36** incorporated in the rocker arm **12**.

Guide means for the push rod in the form of a flat washer **38** is fixedly mounted in the piston and provides solely sufficient clearance therebetween with the external stem periphery of the push rod so as not to restrict free axial movement of the push rod therein. Coil spring means **40** for biasing the push rod away from seating engagement of its valve portion on the piston is mounted between a washer **42** secured by a snap ring **44** internally of the body and a washer **46** held from movement along the stem in one direction by a snap ring **48** rigidly secured in the stem of the push rod intermediate its ends. The push rod in its position between the rocker arm and tappet is partly submerged in the low pressure chamber and in addition to passing centrally through the washer **38** passes centrally through washer **42**.

Operating liquid for the tappet is supplied by way of an opening **50** in the wall of a guide **52** within which the tappet is mounted for operation and thence by way of annular channel **54** and passages **56** in the wall of the body to the low pressure chamber **22** internally of the body.

The tappet is adapted to be engaged upon the exterior of the closed end of the body thereof for the actuation thereof, which thrust is in turn transmitted from the body by way of the compression liquid in high pressure chamber **24** of the piston **20**, next from the piston to the push rod, thence from the push rod to the rocker arm which in turn is adapted to activate a valve, not shown, through the medium of its arm oppositely disposed from the push rod engageable end thereof.

The spring **26** is to be of a strength capable of overcoming the weight of the piston plus friction plus atmospheric pressure acting upon the body of liquid on the opposite side of the piston from that side upon which the spring **26** impresses its load.

In the normal operation of the valve gear mechanism with liquid being supplied to the tappet and with the members of the gear mechanism in the position of Fig. 1 upon the lifting movement of the cam from its base circle position motion is transmitted from the cam to the body, from the body by way of the trapped column of liquid between the body and piston to the piston, from the piston to the push rod engageable therewith, thence from the push rod to the rocker arm and from the rocker arm to the valve to be actuated thereby. During this phase of operation the valve portion **30** of the push rod remains seated upon the valve seat inasmuch as the load of the valve spring, not shown, acting back through the valve, not shown, and rocker arm serves to hold the push rod in tappet valve seated position. Throughout the subsequent valve opening and closing as actuated by movement of the cam and the members of the valve gear mechanism in train therewith the members thereof remain in thrust transmitting contact relation. Upon the valve reaching its seat the pressure of the valve spring acting to bear against the rocker arm and push rod to maintain thrust contact therebetween is relieved, thus permitting of the spring means **40** coming into action operative to urge the cylindrical body downwardly against the base circle of the cam simultaneously urging the push rod upwardly into engagement with the rocker arm, to thus compensate for any requirement for adjustment necessary in the valve gear mechanism. As the push rod is moved upwardly the valve portion thereof becomes unseated from

the valve seat therefor on the piston controlling the communication between the low and high pressure chamber by way of opening **28** and simultaneously therewith the liquid quickly flows from the low pressure chamber around the end of the valve portion of the push rod into the high pressure chamber. Concomitantly with the flow of fluid around the valve the spring **26** being of a strength greater than atmospheric pressure acting on the liquid on the opposite side of the piston therefrom plus the weight of the piston plus friction acts to move the piston slowly into seating relation with the valve portion of the push rod to thereby reestablish once again the thrust transmitting relation of the members of the valve gear system as shown by Fig. 1.

It is to be noted as shown by Fig. 1 wherein the valve portion of the push rod is spherical in shape that an annular line or zone of contact is had between the spherical valve portion and the valve seat in the piston whereby an effective seating and sealing is achieved. Furthermore, any tendency for foreign particles lodging on the valve seat acting to interfere with a proper functioning of the tappet is eliminated since the thrust force of the push rod by way of its valve portion on the valve seat operates to crush said particles and permit of a continuous desired operation of the tappet.

Fig. 2 illustrates a modified form of valve seating portion for the push rod wherein a ball bearing **100** corresponding in size to the spherical portion of the push rod of Fig. 1 is loosely mounted in the end of the push rod permitting of its free movement whereby wear between the valve and valve seat upon which it seats is minimized.

Fig. 3 illustrates a further modification over the structure of Fig. 2 wherein a ball bearing **102** such as ball bearing **100** of Fig. 2 is loosely mounted in the end of the valve portion of the push rod and is engageable with a smaller ball bearing **104**, mounted in a cavity **106** in the push rod, having engagement with the bearing **102** so as to assure of the minimized friction free rolling action of ball **102** in its capacity as a valve member to be seated on an annular zone in the piston of the tappet of Fig. 1.

While this invention has been described in connection with certain specific embodiments, the principle involved is susceptible of numerous other applications that will readily occur to persons skilled in the art. This invention, therefore, is limited only as indicated by the scope of the appended claims.

What I claim is:

1. A hydraulic length compensating device comprising a hollow cylindrical body having a closed and an open end, a piston reciprocable in the hollow of the cylindrical body, defining within the body respective high and low pressure chambers on opposite sides thereof, having an opening therethrough providing communication between the chambers, a push rod having one end adapted to be engageable by a rocker arm of a valve gear mechanism and having at its other end valve means engageable with the piston to control the passage of hydraulic liquid through the opening therein, resilient means biasing the push rod away from the body and resilient means biasing the piston away from the body, said valve end of the push rod having a free moving ball bearing therein.

2. A device according to claim 1 wherein the push rod constitutes a single member.

3. A hydraulic length compensating device comprising a hollow cylindrical body having a closed and an open end, a piston reciprocable in the hollow of the cylindrical body, defining within the body respective high and low pressure chambers on opposite sides thereof, having an opening therethrough providing communication between the chambers, a push rod having one end adapted to be engageable by a rocker arm of a valve gear mechanism and having at its other end valve means engageable with the piston to control the passage of hydraulic liquid through the opening therein, resilient means biasing the push rod away from the body, resilient means biasing the piston away from the body and means fixed in the piston closely embracing the external periphery of the push rod for guiding same.

4. A device according to claim 3 wherein the resilient means biasing the push rod is disposed intermediate the body and the push rod.

5. A device according to claim 4 wherein the resilient means biasing the piston is in the form of a coil spring disposed in the high pressure chamber intermediate the inner wall on the closed end of the body and the piston.

6. A hydraulic length compensating device comprising a hollow cylindrical body having a closed and an open end, a piston reciprocable in the hollow of the cylindrical body, defining within the body respective high and low pressure chambers on opposite sides thereof, having an opening therethrough providing communication between the chambers, a push rod having one end adapted to be engageable by a rocker arm of a valve gear mechanism and having at its other end valve means engageable with the piston to control the passage of hydraulic liquid through the opening therein, resilient means biasing the push rod away from the body and resilient means biasing the piston away from the body, said valve end means of the push rod including a loosely mounted member at the extremity thereof.

7. A device according to claim 6 wherein the loosely mounted member is a ball bearing.

8. A device according to claim 7 wherein the ball bearing is engageable by a smaller ball bearing defined within the push rod.

References Cited in the file of this patent

UNITED STATES PATENTS

Re. 21,931	Voorhies et al.	Oct. 21, 1941
2,108,514	Summers	Feb. 15, 1938
2,109,816	Best	Mar. 1, 1938
2,140,826	Bettison	Dec. 20, 1938
2,160,257	Appel	May 30, 1939