April 13, 1937. G. S. P. DE BETHUNE 2,077,226

MIXER

Filed Dec. 2, 1932 3 Sheets-Sheet 1

Fig. 1.

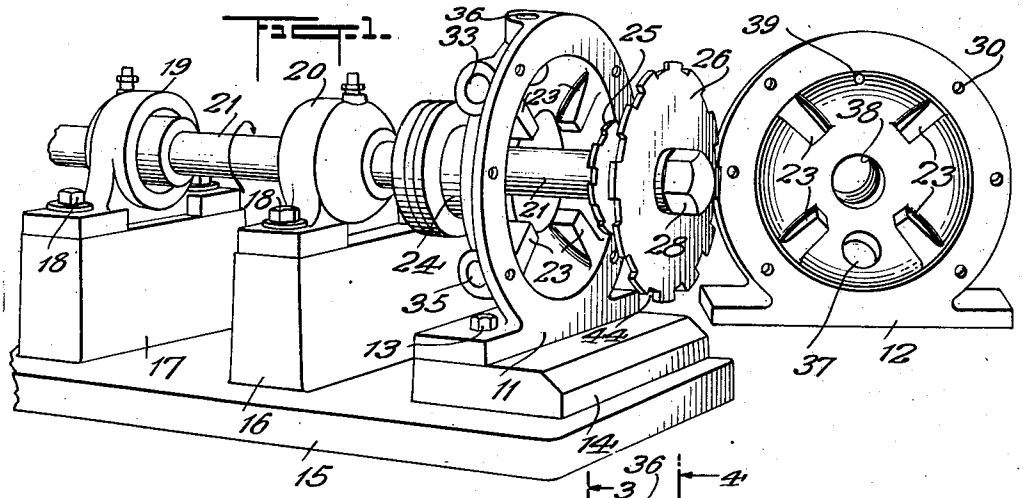

Fig. 2.

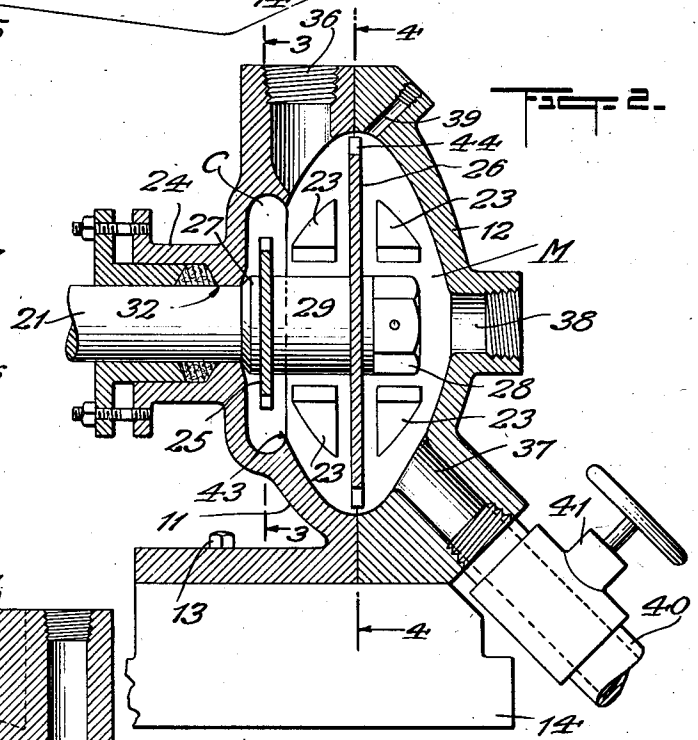

Fig. 11.

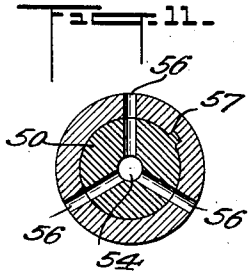

Fig. 3.

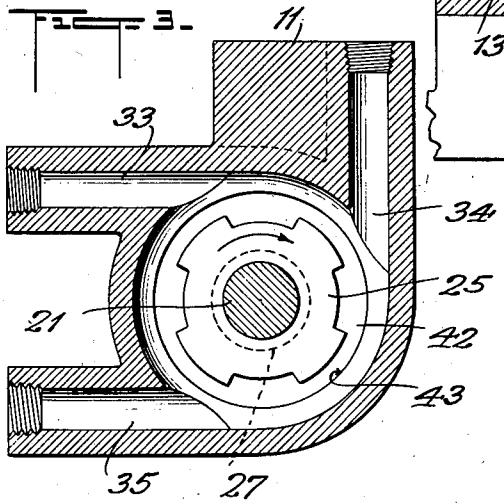

INVENTOR
GASTON S. P. DE BETHUNE.
BY
Walter M. Chapin
ATTORNEY

April 13, 1937. G. S. P. DE BETHUNE 2,077,226

MIXER

Filed Dec. 2, 1932 3 Sheets-Sheet 2

FIG. 4.

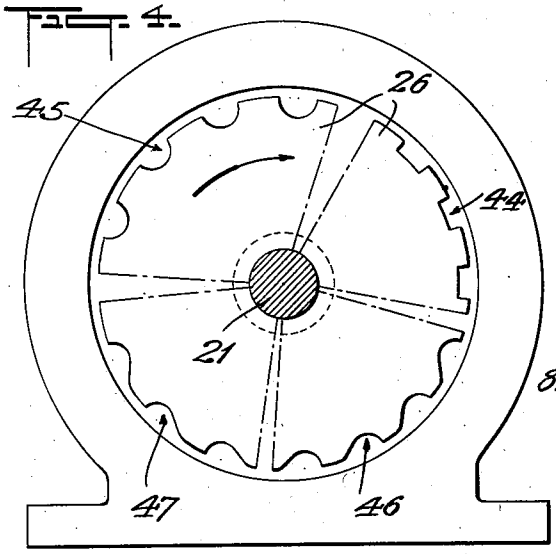

FIG. 6.

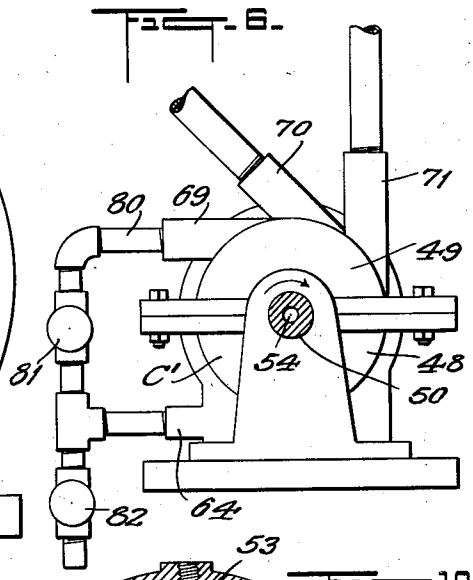

FIG. 5.

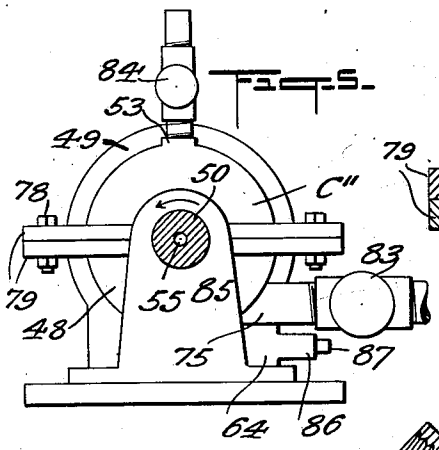

FIG. 10.

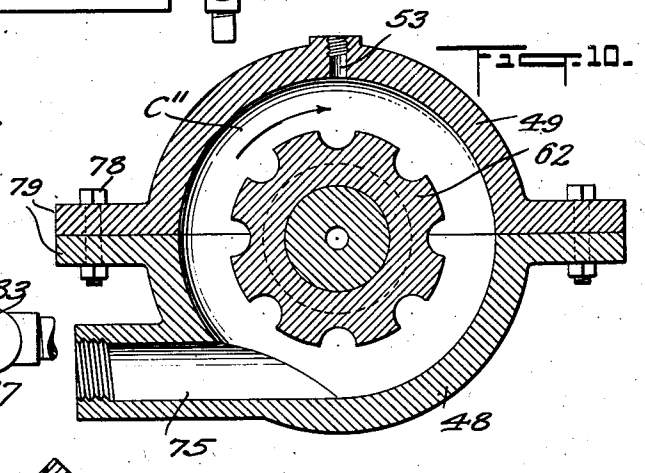

FIG. 8.

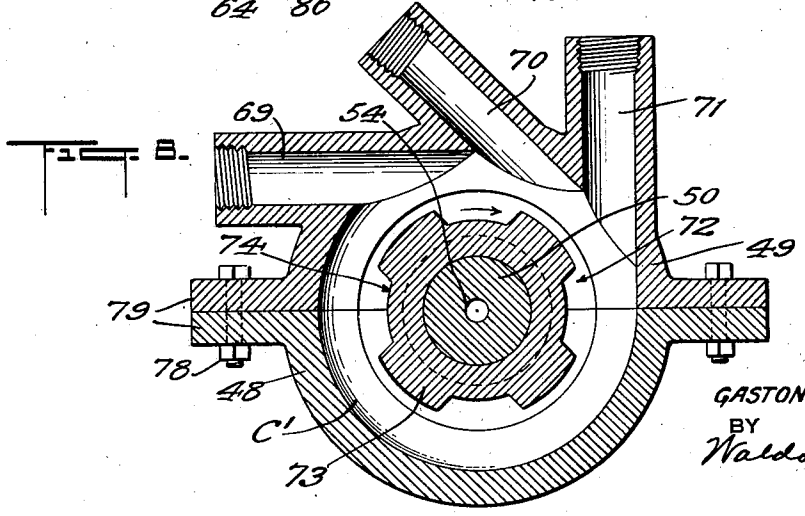

INVENTOR
GASTON S.P. DE BETHUNE.
BY
Waldo M. Chapin
ATTORNEY

April 13, 1937. G. S. P. DE BETHUNE 2,077,226

MIXER

Filed Dec. 2, 1932 3 Sheets-Sheet 3

Fig. 7.

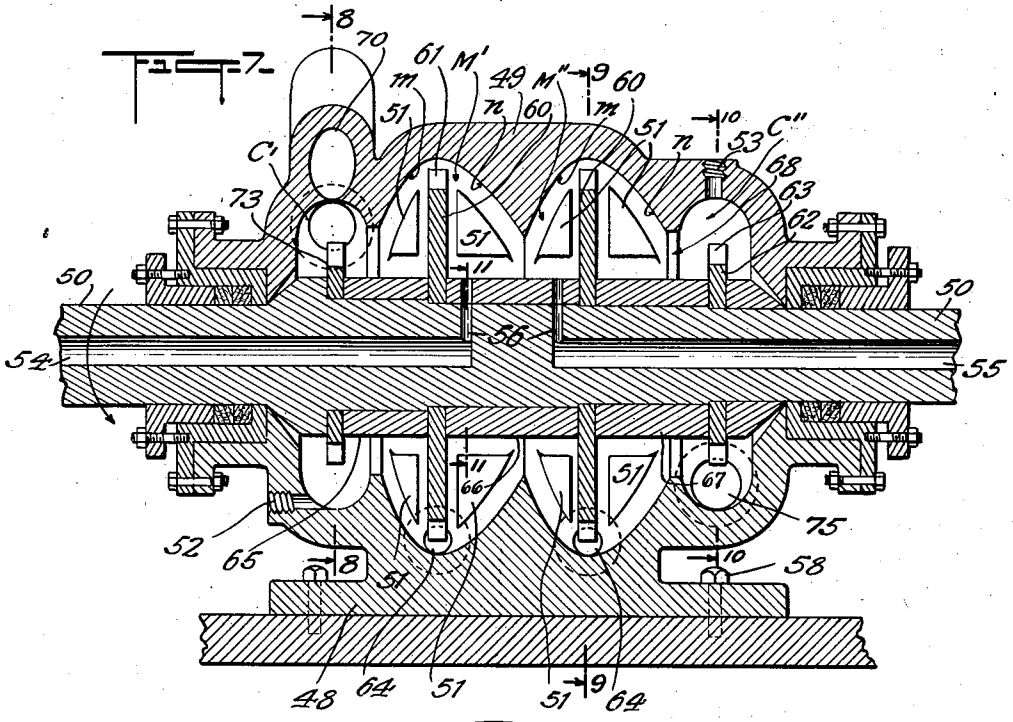

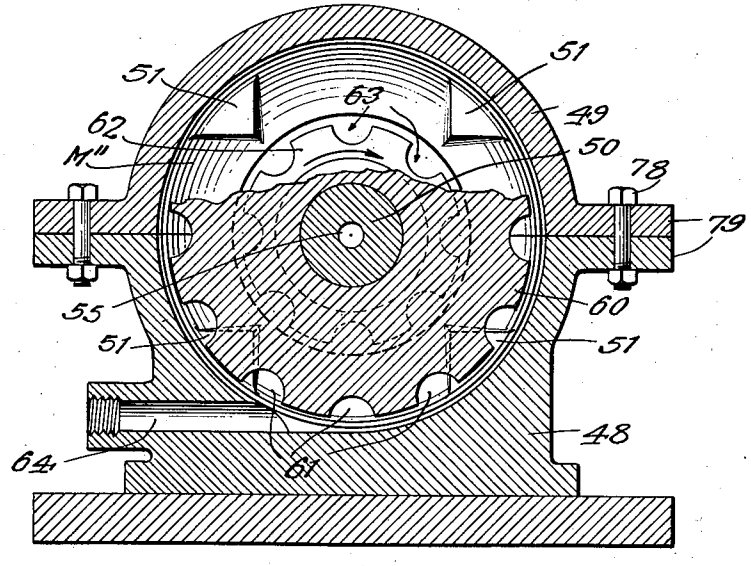

Fig. 9.

INVENTOR
GASTON S.P. DE BETHUNE.
BY
Wardo M. Chapin
ATTORNEY

Patented Apr. 13, 1937

2,077,226

UNITED STATES PATENT OFFICE

2,077,226

MIXER

Gaston S. P. de Bethune, New York, N. Y.

Application December 2, 1932, Serial No. 645,363

19 Claims. (Cl. 259—9)

This invention relates to mixers and is particularly concerned with various desirable improvements in the structure and mode of operation of mixers of the type which will be briefly hereinafter designated as the "Bethune" mixer, by which is intended a mixer of the general type illustrated in my Letters Patent No. 1,727,753 characterized by having a mixing chamber, the surface of which is symmetrical about an axis and the radial outer portion of which is of conical curvature in cross-section, comprising also a rotating shaft passing through said chamber substantially coincident with its axis, a radial stirrer upon said shaft within said chamber, and inlet and outlet ports in the opposite side walls of the chamber.

Certain of the improvements herein set forth are, however, susceptible of being used in other suitable types of mixers, and I contemplate the utilization of such features of my present invention in any field to which they are adapted by their nature.

An aim of the present invention is to provide a mixer with elements adapted for easy assembling and dis-assembling, in order (1) to permit easy cleaning, and (2) to be flexible, i. e., to provide facilities for changing readily some of its elements, in order to permit different results to be attained with a minimum expenditure of time and labor. These features are especially desirable in laboratory work, where easy cleaning is a desideratum and differentiations between successive tests are equally important, but these and other features to be herein described are also of great importance in the economical operation of commercial machines, as will be readily understood by those skilled in the art.

Another object of the invention is to provide a mixer with what may be termed a "collecting chamber", preferably shaped as the convex part of a torus coaxial with the shaft, to which the fluids to be mixed are introduced through orifices distributed around its periphery and in which chamber a pre-mixing of the fluids is produced, where more than one fluid is introduced thereto, the fluid in progress moving from this chamber into the adjoining mixing chamber by overflow through a communicating annulus between the collecting chamber and adjoining mixing chamber, the particular effect of the collecting chamber in any event being to distribute the fluid evenly all along the circumference of the inlet to the mixing chamber.

Still another object of the invention is to provide in each mixing chamber baffles of improved form, having such a contour and so spaced as to provide zones of relative tranquility in which the fluid in progress remains only a short time, after which it comes suddenly into the zone of action of the rotating vane in the mixing chamber, and the effect of the centrifugal force to which it is instantaneously submitted is consequently much more effective than with no baffles, the effect of the mixing vane being otherwise substantially as described in my aforesaid Letters Patent No. 1,727,753.

Beyond the mixing vane, in the discharge end of the mixing chamber, similarly disposed baffles serve to break the whirl of the fluid in progress, adding to the intensity of the treatment; and between these baffles also there are zones of relative tranquility from which the produced fluid is discharged in orderly fashion through suitably disposed vents.

A cognate feature of the present invention is to provide at the discharge end of the mixing chamber or series of mixing chambers a collecting chamber, preferably having the contour of the convex portion of a torus, and in which the fluid in progress acquires a revolving trend and the product is thereby tranquilized from the relatively turbulent mixing stage, and so is adapted to be discharged evenly and rapidly through a tangential outlet.

Another cognate feature of the present invention is to provide at the discharge end of the mixing chamber a perpendicular outlet disposed coaxially with the shaft, this coaxial disposition being rendered possible where the shaft terminates short of the front wall of said mixing chamber.

An improvement of great importance consists in the provision of means to regulate in order to increase or to retard the rate of discharge of the mixer, by a valve which affords a novel means to control the rate of production of such mixers. Heretofore, the rate of production of the mixer has been controlled at the inlet end of the mixer instead of at the discharge end. I have found that my new method of control provides a very rational and safe means for regulating the rate of production, as will be explained more explicitly hereinafter. Its primary purpose, and effect, briefly stated, is to keep the mixer always full, avoiding suction of air into the mixture, which tends to produce a disturbing effect and can be very detrimental when any oxydation of the produced fluid must be absolutely avoided.

Among other objects of the invention is to

provide means for introducing to the mixing chamber, at any desired stage in the treatment of the fluid, another fluid or fluids, by means of channels in the operating shaft, thus increasing the flexibility of the mixer, and its efficiency in operation; also means to by-pass the treated fluid, in part, back to an earlier stage for re-treatment, and thus to modify the treatment of the fluid in progress at that stage in a beneficial manner, thereby rendering such treatment as emulsification easier and the final emulsion better in quality. Heretofore, in a continuous system of production, such a result could only be obtained by connecting up on the discharge end of the mixer a supplementary pump in order to return to the intake end a part of the outflow, and with viscous emulsions such for instance as asphaltic emulsions, it is almost impossible to operate such a pump in a satisfactory manner.

Another aim of the invention is to provide mixing vanes having peripheral notches of desirable contours acting to prolong and improve the mixing action of the vanes.

Another object is to construct the casing of the mixer in such a manner as to permit part thereof to be readily removed, giving access to the shaft and vanes, for purposes of easy inspection, adjustment, cleaning, removal and replacement or substitution of the vanes, shaft, etc., according to the exigencies of operation in particular installations.

The above improvements, while embodying the useful features disclosed and claimed in my earlier patent, co-operate to obtain notable advantages as compared with the earlier type of mixer constructed according to the patent disclosure, as will be explained hereinafter.

The above, and other features of the invention are illustrated and described fully in the accompanying drawings and specification and are pointed out in the claims.

In the drawings:

Fig. 1 is an assembly view in perspective of a mixer embodying certain features of my present invention, some of the parts being shown partly assembled or ready for assembly;

Fig. 2 is a fragmentary detail view in longitudinal section taken on a larger scale along the medial vertical plane of the mixer shown in Fig. 1, certain of the parts being shown in elevation;

Fig. 3 is a fragmentary detail view in transverse section taken on the line 3—3 of Fig. 2;

Fig. 4 is a view similar to Fig. 3 taken on the line 4—4 of Fig. 2, the central portion of this figure being of a somewhat diagrammatic character to illustrate several optional contours for the mixing vane therein shown;

Fig. 5 is a view in front elevation of a modified form of mixer with the shaft shown in section;

Fig. 6 is a view of the same in rear elevation with the shaft shown in section;

Fig. 7 is a view of the same in longitudinal section on a larger scale taken on the medial vertical plane of Fig. 5;

Fig. 8 is a view in vertical section on the line 8—8 of Fig. 7;

Fig. 9 is a similar view on the line 9—9 of Fig. 7;

Fig. 10 is a similar view on the line 10—10 of Fig. 7; and

Fig. 11 is a similar view on the line 11—11 of Fig. 7.

Referring to Figs. 1 to 4 inclusive in which is illustrated a form of mixer which may be usefully employed as a laboratory machine or for various commercial uses in which it is desirable to utilize a single mixing chamber, the casing part 11 is bolted at 13 in upright, assembled position upon a base member 14 constituting part of a platform 15 which has other base members 16 and 17 to which are secured by bolts 18 the bearings 19 and 20 for the driving shaft 21 of the apparatus, the shaft extending into the casing part 11 through a stuffing box 24 (see Fig. 2) of well known or suitable form. The shaft is shaped in such a manner that it may be removed easily after disconnecting it from the coupling, and in Fig. 1 it is shown as partially withdrawn, to reveal more clearly the interior structure of the casing part 11 and the vanes 25 and 26 carried by the shaft, which will be described hereinafter.

The casing parts 11 and 12 are suitably shaped to provide an interior capacity for two communicating chambers best seen in Fig. 2, comprising first a mixing chamber designated generally by the reference character M and which may be and preferably is, shaped generally in accordance with the invention disclosed and claimed in my aforesaid Letters Patent No. 1,727,753, being symmetrical around the axis of the shaft 21 and the directing curve of its interior walls being a parabola. Within this chamber rotates and co-operates the larger vane 26.

Second, the casing comprises, in pursuance of an important object of my present invention, a collecting chamber designated generally by the reference character C, in which rotates the smaller vane 25, this chamber being shaped preferably as the convex part of a circular torus coaxial with the shaft 21 on which the vanes 25 and 26 are held against a shoulder 27 by a nut 28, being suitably spaced apart by a sleeve 29.

The casing parts 11 and 12 are assembled with a tight fit in order to prevent leakage, along a vertical plane perpendicular to the shaft, the front member 12 being fixed to the rear part 11 by bolts or studs for which holes 30 are provided, and when the front part is removed, access is given to the rotor, composed of the shaft 21, vanes 25 and 26, etc., for inspection, adjustment, removal and replacement, or repairs, and the entire rotor can be removed when desired.

All of the parts of the mixer are thus accessible for purposes of cleaning, etc. Besides the axial opening 32 provided for the shaft, the casing has several openings including those in the rear part of the casing and those in the front part of the casing, those first mentioned comprising three circular channels, 33, 34, and 35, opening tangentially into the collecting chamber C, and two of which (33 and 34) have the same tangential direction as the rotation of the shaft, while the third (35) leads off in the same direction.

There is also a perpendicular orifice 36 opening directly into the mixing chamber M and shaped as described in my Patent 1,727,753.

In the front part 12 of the casing, there are three similar perpendicular orifices, 37, 38, and 39. Each orifice is threaded to permit connection with an adequate system of piping (not shown) when in practical use, or to receive a plug when any orifice is not in use. The orifice 37 is shown as provided with an element of piping 40 and with a valve 41, and this feature will be explained hereinafter.

The communication between the chambers C and M is through the annular opening 42 between the sleeve 29 on the shaft, and the circular edge

43 of intersection between the inner surfaces of the chambers.

The vanes 25 and 26 are preferably shaped as right circular cylinders cut out of a thick plate and in pursuance of another aim of my invention are provided with peripheral notches of rectangular contour as shown in Fig. 1 and in Fig. 4 at 44, or of semi-circular, or other desirable contour as shown in Fig. 4 at 45, 46 and 47, to be described more at length.

Each part of the casing is provided with four baffles 23, shaped with radial edges projecting inward from the wall of the mixing chamber. These baffles are in symmetrical positions and face each other on both sides of the larger or mixing vane.

I shall now describe how the laboratory mixer is operated, it being understood that this expression is employed without limitation as to any desired or suitable use of the invention.

The mixer is intended to subject fluid materials to an intensive mechanical action. By fluid materials I mean anything that flows, thus any liquid, however plastic, viscous or heterogeneous, it may be, which may or not have particles or lumps in suspension, provided it flows, any gas, any vapor, or any material capable of flowing.

The treatment to which one fluid is, or several fluids together are, subjected in the mixing chamber, is substantially as described in my Patent 1,727,753.

There are two ways of feeding the fluid or fluids into the mixer and of discharging the product therefrom:

First, by using for the intake, one or several of the orifices 33, 36, 34 of the rear part of the mixer and using for the discharge one of the orifices 37, 38, 39 of the front part of the casing; or second, by using for the intake one or a combination of the orifices 37, 38, 39 of the front part and using for the discharge either one of the orifices 36 or 35 of the rear part of the casing.

When a fluid flows into the collecting chamber C through one of the orifices 33 or 34 under a certain velocity head resulting either from a gravity head or from a pressure head, it tends to circulate around the collecting chamber and this movement is fostered by the action of the small vane 25; when moving all around the collecting chamber, the fluid, by overflow, finally moves into the mixing chamber M through the annulus 42, and the particular effect of the collecting chamber is to distribute evenly the fluid all along the circumference of the edge 43.

The process is similar when two different fluids are admitted into the collecting chamber, separately and simultaneously, under appropriate heads, through the orifices 33 and 34, with the consequence, however, that a pre-mixing of the fluids is produced in the collecting chamber.

It is to be noticed that the clearance between the smaller vane and the walls of the collecting chamber is large enough so as not to build up within the moving fluid, any appreciable pressure head which would obstruct the inflow.

When a fluid is admitted directly into the mixing chamber through the orifice 36, while the orifices 33 and 34 are plugged, the collecting chamber is merely passive.

The fluids admitted into the mixing chamber either from the collecting chamber through the annulus, or directly through the orifice 36, or through both simultaneously, penetrate first into the space between the baffles; the four spaces between the baffles are zones of relative tranquility in which the fluid in progress remains only a short time, after which it comes suddenly into the zone of action of the rotating mixing vane. The effect of the centrifugal force to which it is instantaneously submitted is consequently much more effective than without the baffles.

The effect of the mixing vane is, as hereinbefore stated, substantially as described in Patent No. 1,727,753.

Beyond the mixing vane, in the discharge end of the mixing chamber, the effect of the baffles is to break the whirl of the fluid in progress, thereby adding to the intensity of the treatment; between the baffles, there are again zones of relative tranquillity from which the produced fluid is orderly discharged through one of the orifices 37 or 38.

I shall now explain why the orifice 37 is shown as provided with an element of piping and with a valve. This valve on the discharge piping is an essential feature, because it provides what I have discovered to be a very rational and safe means of control of the rate of production of the mixer, as will be explained more explicitly hereinafter. This control valve can, of course, and should, be adapted to any orifice used for the discharge.

The orifice 39 is different from 37 and 38 in that it opens into the mixing chamber M near the vertex of the parabola, at a point where the fluid whirl is not completely broken up by the baffles. Consequently, the orifice 39, when connected to an appropriate system of piping, is adapted to lift the fluid to a certain level whose gravity head is greater than either the gravity head or the pressure head of the intake, due to the additional pressure head resulting from the velocity imparted to the fluid by the rotating vane 26. This orifice 39 can thus well be used for the discharge of the product; it can also be used for a by-pass as explained hereinafter; and it can also be used for the intake, under an appropriate pressure head, or gravity head, when the front part of the casing is used as the intake end of the mixer, as I shall now explain.

In this latter case, any of the orifices 37, 38, 39 may be used, either alone or in combination with the others, under appropriate pressure or gravity heads to admit into the mixing chamber one or several fluids to be treated in the mixer. When only one fluid is admitted, the central orifice 38 will be used in preference to the others. I need not repeat what was said hereinbefore when describing the operation of this laboratory mixer in case the rear part of the casing is utilized as the intake end. The operating processes are in both cases identical in almost every detail, except for the fact that the fluid product passes from the spaces between the baffles, through the annulus 42, into the collecting chamber C, wherefrom it flows out through the orifice 35, the small vane 25 imparting to it a moderate velocity which aids the discharge. It is to be understood that the perpendicular orifice 36 may also be used for the discharge and in this case the collecting chamber is merely passive. In any case, the orifice used for the discharge is provided with a suitable control valve, as shown at 41, Fig. 2.

It should be understood that particular service conditions may warrant the use of a perpendicular intake orifice, either alone or in combination with other tangential or perpendicular orifices. This is preferable when feeding a thick or viscous fluid, because bends in the path of flow of

such a fluid should be avoided as much as possible, in order to reduce the gravity head or the pressure head on the intake. As an example, when treating together in the mixer, fats and caustic soda, in order to produce what is known as a cold saponification, it may be advantageous to feed the caustic soda through a tangential orifice, and the fats (for example molten tallow) through a perpendicular orifice, because the fats may then be admitted at a lower temperature.

A perpendicular intake orifice may also be advisable when a heterogeneous fluid containing particles or lumps in suspension, is to be treated in the mixer, as, for example, leather chips to be disintegrated in any suitable liquid, because bends in the piping are liable to lead to obstructions.

Having thus described the operation of the laboratory mixer, I note the following advantages of operation secured by the improvements above disclosed, viz:

(1) By using a collecting chamber C for the intake, the power required to operate the mixer is reduced in comparison with mixers in which the intake is made through one or several perpendicular orifices. By using a collecting chamber for the discharge, as when the fluids are introduced from the front the power required to operate the mixer is reduced in comparison with mixers in which the discharge is made through a perpendicular orifice. This improved power factor is in itself an important object realized by the present invention.

(2) The use of a collecting chamber C for the intake of two fluids separately and simultaneously is beneficial to their subsequent treatment in a mixing chamber, in certain cases, as for example, in the production of asphaltic emulsions, because of the pre-mixing effect.

(3) The combined action of the mixing vane **26** and the baffles **23** as described herein, increases greatly the efficiency of the treatment in a mixing chamber.

(4) It is highly advantageous to control the rate of production from the discharge end and not from the intake end only. I wish to emphasize this fact. In order to obtain the best products and standardized products, it is essential that the mixer always be kept full; if the rate of production is controlled from the intake end, as is done in all the continuous mixing devices of which I have knowledge, the rate of outflow may at times under circumstances familiar to every hydraulic engineer suddenly become greater than the rate of inflow, and in such a case the mixer will become empty or partially empty, or at least be operating under a certain degree of depressure, or of vacuum. The result will have a disturbing effect on the treatment. Particularly, one consequence may prove very detrimental; i. e., air may be sucked into the mixer through the stuffing box, or, circumstances permitting, air may be sucked at counter current to the discharge, which in either case, will produce a disturbing effect, and can even be very detrimental when any oxydation of the produced fluid must be absolutely avoided.

The control of the rate of production on the discharge can best be regulated by a valve **41** in the discharge outlet operated either by hand or by any known system of automatic adjustment.

(5) When two or more fluids are admitted separately and simultaneously into the mixer, either through tangential or perpendicular inlets, or through tangential and perpendicular inlets, these fluids must be fed, under appropriate heads, in constant proportions. There are several well commercialized systems for the control of proportioning simultaneous rates of flow and they need not, therefore, be described herein. This control of proportions is distinct and different from the control of the rate of production and, to a certain extent, it must be dependent upon the latter.

(6) The orifice **39** as hereinbefore stated, can be used for setting up a by-pass. It has proved beneficial in certain cases to return a part of the finished or nearly finished product to the intake in order to introduce it with the inflowing raw materials. For example, when making asphaltic emulsions, it is advantageous to add to the asphalt and water from 4% to 8% of the finished emulsion, because the emulsification is more readily produced and the final product is better. Heretofore in continuous systems of production, such a result could only be obtained by installing at the discharge end a supplementary pump in order to return to the intake end a part of the outflow. With asphaltic emulsions it is almost impossible to operate such a pump satisfactorily. Such a result may be obtained without the extra pump, simply by setting up a by-pass as explained herein. In the instance illustrated, the orifice **39** may be connected by a pipe (not shown) to any suitable part of the system of piping leading to one of the inlet orifices, as for example the inlet **36**, or the inlet **33** or **34**. A valve in the piping of the by-pass will permit the control of the rate of flow of the returned fluid.

(7) The shape of the mixing vane **26** as a right circular cylinder coaxial with the shaft and provided with notches has proven to be an important development. It is self-evident that, for a given rate of production, the thicker the vane, the longer will be the duration of the treatment in the mixer. In the laboratory mixer, the vane may be easily removed and replaced by a different vane, so that new effects may easily be obtained and observed. By combining these effects with the operation of the control valve on the discharge, a broad range of experimentation is possible.

The notches in the vanes may be rectangular as at **44** or semi-circular as at **45** (see Fig. 4), or semi-circular with forward (**46**) or backward (**47**), rounding off, or in any other convenient form, with, however, one important feature which is that one end at least, of each notch shall be radial; i. e., along a radius of the mixing vane, or nearly radial, or that its directing curve shall have a tangent which is either radial or nearly radial.

The number of the notches and their individual length along the outer circumference of the vane will be such that their total length along this said circumference will be between ¼ and ¾ of the length of this circumference. The depth of each notch will be between 1/100 and 1/10 of the diameter of the vane.

The particular shape and dimensions of the notches of the smaller vane in the collecting chamber have no appreciable importance.

(8) The laboratory mixer is not shown as equipped with a jacket, for the sake of simplicity, and because it is easy for experimental purposes to bring the mixer to the required temperature previously to a test by passing through it a flow of one of the fluids to be treated or a neutral, non-objectionable fluid at the right temperature. During the test, the fluids will be admitted, each

of them at the best temperature in order to obtain the best results by the treatment. This method can be applied also for the operation of industrial mixers.

(9) Also for the sake of simplicity, the laboratory mixer is shown as having but one mixing chamber. It is self-evident, however, that it can, nevertheless, be utilized for treating the materials repeatedly in rapid succession with the eventual admission of new fluids at each treatment, or at a different regime of speed and/or temperature and/or pressure at each treatment or with a different duration of time at each treatment by regulation of the control valve of the discharge. Therefore, it may readily be ascertained by a laboratory mixer whether an industrial mixer intended for a definite process should have one or several mixing chambers and what their individual dimensions should be.

As a general conclusion of the research work made up to date, I am able to state that the several improvements described hereinbefore enabled me to obtain more easily as good or better results than previously possible and to treat successfully new cases, thereby extending greatly the field of application of the Bethune mixer from mixing and emulsifying to homogenizing, dispersing and disintegrating.

For example, it is possible to obtain good dispersions of insoluble pigments or dyes in organic liquids in order to produce paints or lacquers;—it is also possible to homogenize emulsions by breaking up the dispersed phase to a satisfactory degree;—and it is also possible to disintegrate, not only coarse particles of crystalline materials, but also fragments or lumps of amorphous, fibrous, pulpy or tough materials conveyed into the mixer in a liquid phase.

A homogenizing effect comparable satisfactorily in many instances with that secured by the use of conventional forms of homogenizers characterized by very narrow clearances and operating at very high pressures, may be achieved with apparatus of the types disclosed herein, characterized by mixing elements operating with relatively larger clearances and when operating at regimes of constant and relatively lower pressures, as compared with those of said conventional homogenizers.

I shall now describe an industrial mixer in which several other novel features are embodied in combination with those described hereinbefore.

The mixer has a stationary casing with a horizontal joint as described in Patent No. 1,727,753, and a rotor. The lower part of the casing is assembled on a base on which may also be assembled the necessary bearings to support the shaft and suitable driving mechanism which form no part of the present invention and which it is not necessary to illustrate or describe.

The upper part of the casing is assembled with a tight fit on the lower part and secured thereto by bolts and nuts or hinges. The shaft extends into the casing through two stuffing boxes.

The assembled casing provides an inside capacity for four chambers, communicating through annuli as described hereinbefore, viz:—one collecting intake chamber, two mixing chambers and one collecting discharge chamber.

The mixing chambers are shaped as described in my said patent, the directing curve on the inlet side of each chamber being a parabola and the directing curve on the outlet side of each chamber being a hyperbola confocal with the parabola.

Each of the mixing chambers is provided with two sets of four symmetrical baffles shaped as tri-rectangular solid angles projecting inward and otherwise answering the description given hereinbefore.

At the bottom of each mixing chamber there is provided a tangential orifice which may be used for the eventual setting up of a by-pass or as a cleaning drain.

The collecting intake chamber is shaped substantially as the collecting chamber of the laboratory mixer, but for the fact that there is no tangential orifice leading off in the direction of rotation of the shaft. There are shown three tangential orifices opening into the intake chamber, but there may be as many as required for any definite process. At the bottom of the chamber, there is provided an orifice to be used as a cleaning drain, which is plugged when not in use.

The discharge collecting chamber is shaped substantially as the intake chamber, with the difference, however, that there is only one tangential orifice leading off in the direction of rotation of the shaft, which is used for the discharge of the product after treatment in the mixer. The discharge orifice is connected to a system of piping embodying a control valve by which the rate of production is controlled as hereinbefore described. The discharge chamber is also provided with an air vent for use when starting a run with the mixer in order to exhaust the air as completely as possible. After the air has been exhausted and replaced by the material undergoing treatment, the air vent is closed by means of a plug or a valve.

The several orifices are threaded to accommodate adequate systems of pipings. For larger mixers the orifices should preferably be flanged (not shown).

When the mixer is in operation the intake orifices are connected to suitable sources of supply of the materials to be treated, as may be required for any definite process, the materials flowing in under appropriate heads and being controlled as to their respective rates of flow. Similarly the system of the discharge piping is connected to any suitable apparatus as may be required for subsequent treatment of the product.

The rotor comprises a shaft, one small vane in the intake chamber, one mixing vane in each of the mixing chambers, one small vane in the discharge chamber, and the necessary sleeves to assemble the vanes securely on the shaft.

Another feature resides in the central ducts in the shaft, each of these ducts being provided with a series of vents opening into the interior of the casing. By this means it is possible to inject two more fluids into the mixer at any desired point, the introduced fluids being evenly distributed by the vents into the fluid mass undergoing treatment in the mixer. The fluids to be admitted through these central ducts are introduced therein under appropriate heads by means of stationary devices (not shown) for which a tight fit with the shaft is provided by means of one or two stuffing boxes as may be required.

As illustrative of the operation of this industrial mixer, I shall now describe the production of a certain kind of asphaltic emulsion.

The kettle (not shown) in which the asphalt is rendered molten is connected to one of the tangential inlets, whereby the molten asphalt at about 230° F. flows into the collecting intake chamber. A tank (not shown) containing water at about 195° F. is connected to another tangential inlet and discharges under gravity. The

rates of flow of the two fluids are proportioned by any adequate device (not shown).

In the intake chamber the two fluids are premixed and their temperatures tend to become equalized by heat transfer from the asphalt to the water. The premixed materials are then subjected to intensive treatment in the first mixing chamber whereby a good dispersion is obtained. In the outlet end of the first mixing chamber there are introduced through the central duct in the shaft any suitable softening substances or fluxes which are evenly distributed into the dispersion through the vents. After moving into the inlet end of the second mixing chamber, the softened dispersion receives any suitable emulsifying substances which are introduced through the other central duct in the shaft and evenly distributed through the vents. The complex mixture is now treated for final emulsification in the second mixing chamber, after which the emulsion moves into the collecting discharge chamber from which it may be discharged either into a tank for cooling down, or into tank cars or barrels ready for shipment.

A particular feature remains to be explained. Although the emulsion may well be produced as described, the whole process is improved by feeding into the mixer, simultaneously with the water and asphalt, a certain proportion, say from 4% to 8%, of the finished or nearly finished emulsion. To this end the tangential orifice of the second mixing chamber is used for setting up a by-pass system discharging into the intake chamber through a third tangential intake orifice.

The control of the rate of production, in the particular case of asphaltic emulsions, does not require an elaborate system and may be satisfactorily obtained by means of a single manually operated valve.

Similarly, for the production of asphaltic emulsions the mixer does not require jacketing. It is sufficient that the outside of the mixer be provided with an adequate heat insulator. Before starting a run, however, the temperature of the mixer should be raised with warm water, the by-pass being open, after which the water is throttled down and the asphalt admitted, as well as the fluxes and emulsifiers. At the end of the run these three flows are cut off, and water is caused to flow alone for a time, sufficient to cleanse thoroughly the inside of the mixer. Finally, the cleaning drains are opened in order to remove the small quantities of water which may have collected at the bottom of the several chambers.

The whole process is very simple and it can readily be understood how the mixer may be operated for other processes. It is to be understood that other processes may require other layouts, depending upon the nature of the substances to be treated, or upon the effects desired, but fundamentally the methods of treatment will be similar.

The process herein disclosed embodies various important improvements over conventional mixing methods and these improvements are duly pointed out in the claims and constitute a valuable part of my present invention. This process has for a notable object the continuous treatment of a wide range of materials under constantly maintained conditions of high efficiency, and as a means to that end, the development, during certain phases of operation, of conditions of fluidity and pressure which do not obtain initially, but are eventually extended substantially throughout the system, which then functions continuously with the desirable maximum efficiency so that a product of notable homogeneity of quality is assured.

More particularly, the steps comprised in the novel process include the intermingling of the materials under a certain positive pressure, then subjecting the intermingled materials to a rotary phase of treatment of a highly turbulent character, resulting in frictional and laminating effects, and/or in shocks, the fluids undergoing thereby changes in their physical and/or chemical properties, and the product being then discharged; the pressure being only released after discharge, in order to avoid any intrusion of air into the fluid during the treatment thereof.

The process, in its preferred mode of operation, provides for admitting the fluid smoothly and for subjecting it evenly to the turbulent phase, and for collecting it evenly for a smooth discharge, in order to reduce the consumption of power without reducing the intensity of the mixing action produced by the rotating mechanical means utilized in carrying the process into effect, and of which a now-preferred form has been hereinbefore described in detail, it being understood that any suitable form of apparatus may be employed, with such modifications as may be required for particular installations.

Although it is easy and desirable in most cases to utilize a mixer having a horizontal shaft, it may be advisable, for some particular conditions of service, principally for smaller units, to adopt a vertical shaft. It is apparent that all of the herein described features of improvement may be adapted with but minor changes to a vertical shaft installation.

Referring now to the construction illustrated in Figs. 5 to 11, inclusive:

Fig. 7 is a view in longitudinal section of a Bethune mixer having two mixing chambers, designated generally M′ and M″. The directing curve of the inner walls on the left side of each chamber is a parabola *m*, and the directing curve on the right side of each is a hyperbola *n*. There is one inlet chamber C′, and one outlet chamber C″, these latter two chambers being of the nature of the "collecting" chambers already described, so that they do not require further description at this point. This figure shows in each of the mixing chambers, in side elevation, baffle members **51**, having a solid, pyramidal structure; also, in section, is shown the drain **52** for cleaning the inlet chamber; and an air vent **53** on the outlet chamber C″.

In this embodiment, I have provided a shaft **50** with an axial bore **54** at one end, and a similar bore **55** at the other end, each bore having three inlets **56** into them adjacent the mixing chamber, as shown in Fig. 11. Suitable keys **57**, sleeves on the shaft and between the vanes are preferably provided where needed.

Fig. 9 is a transverse section of the second mixing chamber M″. This figure shows in cross-section the shaft **50**, and, partly broken off, a mixing vane **60** similar to the vane **26** already described, but having semi-circular notches **61**; the figure also showing, in elevation, a portion of the vane **62** in the outlet chamber with similar notches **63**; it shows also the baffles **51**, two of them in elevation, and the other two partly covered by the mixing vane; also a tangential opening **64** which may be used either as a drain or for a by-pass, to be described more at length.

Fig. 8 is a sectional view which shows the in-

let chamber C', shaped in the form of the convex portion of a torus and equipped with three tangential inlets 69, 70 and 71; and having an opening 72 of annular form which provides communication between the inlet chamber C' and the first mixing chamber M'. A vane 73 in this inlet chamber serves the same purpose as the vane 25 in Fig. 3, but has peripheral notches 74 of somewhat different shape.

In the first mixing chamber M' there is shown (Fig. 7) a vane 60 with notches 61 identical with or similar to the vane and notches shown in the mixing chamber M'', respectively under the same numerals (Figs. 7 and 9). The several vanes 73 60, 61, and 62, respectively in the chambers C', M', M'', C'', are spaced apart by suitable sleeve elements 65, 66, and 67, through one of which, 66, extend the inlets 56 from the bores 54 and 55.

In Fig. 10 the outlet chamber C'' is shown in vertical section, shaped in the form of the convex portion of a torus, and a vane 62 is shown whose peripheral contour is different from, but which may be identical in form with, the vane 73; the figure showing also a tangential outlet 75 and an air vent 53. There is no necessity here for a special drain for cleaning, as the outlet 75 can be used for that purpose.

In this type of mixer, I prefer to provide a casing divided horizontally into two parts 48 and 49, secured together by bolts 78 passing through flanges 79 so that the upper part of the casing will be removable to give access to the mixing chambers M' and M'', as well as to the inlet chamber C' and the outlet chamber C'', for which the casing provides space.

The lower part 48 of the casing is shown as bolted at 58 to a suitable base.

Figs. 5 and 6 respectively show the mixer in front and rear elevation. Fig. 6 shows the three tangential inlets on the inlet chamber, of which two, 70 and 71, are used for admitting separately and independently two fluids under rates of flow in definite proportion to each other, under a system of control (not shown as such systems are well known to those skilled in the art), and the third tangential inlet 69 is used for the by-pass 80, originating as at 64 in a mixing chamber and in which the rate of flow is controlled by a valve 81. Another valve 82, below, permits the use of the by-pass opening as a drain for cleaning.

The by-pass provides a means to improve the circulation of very sticky materials, because at times the treatment in a mixing chamber decreases the viscosity of the mixture. This is particularly advisable when in the materials introduced into the mixer there are lumps or crystals or fragments to be disintegrated, and which have a tendency to clog together, letting the liquid phase flow out too rapidly. The partly treated mixture returned by the by-pass prevents this clogging which otherwise might even produce complete obstruction.

Fig. 5 illustrates in elevation the outlet end of the mixer, showing the tangential outlet 75 on the outlet chamber C'' with its control valve 83, provided to control the rate of flow of the mixer, and thus accomplishing one important aim of the invention which I have already described. The figure shows also the air vent 53 with its valve 84; and the end of the shaft 50 protruding from the bearing 85 in order to be connected to a suitable feeding device into which it may extend through a stuffing box.

The end 86 of the by-pass 64 is shown in this figure as plugged at 87, but it may be unplugged for purposes of cleaning.

The above type of mixer, having two (or any suitable number) of mixing chambers, presents many of the advantages of operation recited above in connection with the so-called "laboratory" type of mixer, and it is to be understood that, where suitable, any desirable feature of either type of mixer may be embodied in the other type.

For example, the provision of a collecting chamber, such as that shown at C'', for a discharge chamber, is not an exclusive provision for the plural mixing chamber type.

By using a collecting chamber for the discharge in either type of mixer, the power required to operate the mixer is reduced in comparison with mixers in which the discharge is made through a perpendicular orifice, discharging from one of the spaces between the baffles.

Service conditions may, however, warrant the discharge through a perpendicular orifice, by preference a central orifice, in the commercial type of mixer having plural mixing chambers. Such would be the case if, by omitting a collecting discharge chamber, it were desired to reduce the scope of the mixer, for example by laying it out with only one stuffing box, along lines similar to the lay-out of the above described laboratory mixer.

So also, in any selected type of mixer, the shape of the baffles must be adapted to the fluids to be treated. Baffles constructed as radial projections have proven very good for fluids of low viscosity; with more viscous or plastic materials, however, there is a tendency for them to clog and fill up the pocket formed by the solid angle between the radial sides of the baffles and the wall of the mixing chamber. The materials retained in this pocket may afterwards get loose at any time, haphazard, and upset the smooth and homogeneous action of the mixer. I have, therefore, adopted a new shape for the baffles in order to eliminate these said pockets, and the preferred form of baffles is shown in Figs. 7 and 9. I shape each baffle 51 as a tri-rectangular solid angle, the face of the baffle being parallel to the mixing vane and each of the sides being at an angle of 45° with a radius of the mixing vane. The clearance between the face of the baffles and the mixing vane is between 1/64 and ¼ inch. The baffles are arranged symmetrically on each side of the mixing vane, either facing each other or staggered. As said hereinbefore, the two sides and the face of the baffles intersect each other at a right angle and these intersections are maintained as sharp as possible; where the sides and the face intersect the wall of the mixing chamber, the angles are carefully rounded off or coved in order to promote dislodgment of materials and to permit easy and thorough cleaning of the chamber. In the labratory mixer, there are two sets of four baffles, one set on each side of the mixing vane. In other units there may be more or less baffles, according to each particular case. The number of the baffles and their individual length along the virtual circumference of intersection of their face with the wall of the mixing chamber, are such that the total length of the sections of the said virtual circumference covered by the baffles is between ¼ to ¾ of the length of this circumference.

In the treatment of certain materials, it may be found desirable to introduce steam or other suitable vapor either directly into the mixing

chamber or into the one or both of the collecting chambers which by condensing and consequently releasing its latent heat will raise the temperature of the material for the purpose of pasteurization or sterilization. Similarly a compressed gas which on expansion will cause a reduction in temperature may be introduced for purposes of cooling the material.

I claim:

1. A mixer having a mixing chamber and a rotor therein comprising a shaft with a radial stirrer, of relatively long radius, said mixer being characterized by an inlet chamber formed as the convex portion of a torus coaxial with said shaft, a vane of relatively short radius in said inlet chamber, whereby said inlet chamber is adapted to receive and premix materials in a tranquil operation, said inlet chamber communicating with said mixing chamber through a restricted annular space between the shaft and the edge forming the common union of the interior walls of said inlet chamber and mixing chamber so that along each equal part of this annulus there shall be flowing continuously into the mixing chamber the same quantity of material and thereby the materials are distributed evenly into the mixing chamber.

2. A mixer having a mixing chamber and a rotor therein comprising a shaft with a radial stirrer, of relatively long radius, said mixer being characterized by an inlet chamber coaxial with said shaft, a vane of relatively short radius in said inlet chamber, whereby said inlet chamber is adapted to receive and premix materials in a tranquil operation, said inlet chamber communicating with said mixing chamber through a restricted annular space between the shaft and the edge forming the common union of the interior walls of said inlet chamber and mixing chamber so that along each equal part of this annulus there shall be flowing continuously into the mixing chamber the same quantity of material and thereby the materials are distributed evenly into the mixing chamber, said mixer being further characterized by having one or more tangential feeding openings into said inlet chamber.

3. A mixer having a mixing chamber and a rotor therein comprising a shaft with a radial stirrer, said mixer being characterized by an inlet chamber coaxial with said snaft, a vane therein, said inlet chamber communicating with said mixing chamber through an annular space between the shaft and the edge forming the common union of the interior walls of said inlet chamber and mixing chamber so that along each equal part of this annulus there shall be flowing continuously into the mixing chamber the same quantity of material and thereby the materials are distributed evenly into the mixing chamber, said mixer being further characterized by having one or more tangential openings into said inlet chamber and one or more substantially perpendicular openings thereinto.

4. A mixer having a mixing chamber and a rotor therein comprising a shaft with a radial stirrer, said mixer being characterized by an inlet chamber coaxial with said shaft, a vane therein, said inlet chamber communicating with said mixing chamber through an annular space between the shaft and the edge forming the common union of the interior walls of said inlet chamber and mixing chamber so that along each equal part of this annulus there shall be flowing continuously into the mixing chamber the same quantity of material and thereby the materials are distributed evenly into the mixing chamber, said mixer being further characterized by having one or more tangential openings into said inlet chamber and one or more substantially perpendicular openings thereinto, and means to introduce said materials into a selected opening or openings under pressure.

5. A mixer provided with an inlet chamber characterized as set forth in claim 1 and further characterized by having said mixing chamber formed with interior walls having a circumferential zone of conical curvature in cross-section.

6. A mixer having one or more mixing chambers and one or more collecting chambers, each of said collecting chambers having the form of the convex portion of a torus semi-circular in cross section and each of said mixing chambers having its periphery formed with interior walls having a circumferential zone of conical curvature in cross-section.

7. A mixer having a mixing chamber characterized by a radial outer portion of conical curvature in cross-section and a rotor therein provided with a radial stirrer, said mixer being further characterized by having a series of baffles respectively having an active portion defined by three surfaces intersecting each other at right angles, said baffles projecting from its walls in position to co-operate therewith in the fluent delivery of material to said stirrer to produce a turbulent mixing effect, said baffles having surfaces of sensibly great individual area and of a contour adapted to promote dislodgment of materials under treatment.

8. A mixer having a mixing chamber characterized by a radial outer portion of conical curvature in cross-section and a rotor therein provided with a radial stirrer, said mixer being further characterized by having a series of baffles respectively having an active portion defined by three surfaces intersecting each other at right angles, said baffles projecting from its walls in position to co-operate therewith in the fluent delivery of material to said stirrer to produce a turbulent mixing effect, said baffles being of pyramidal form with coved regions adjacent to their bases.

9. A mixer having a mixing chamber characterized by a radial outer portion of conical curvature in cross-section and a rotor therein provided with a stirrer, said mixer being characterized by means to introduce to said mixing chamber materials to be treated, and being further characterized by mixing elements having relatively large clearances and by means operating under a regime of constant pressure to regulate the flow of materials through said mixer by controlling the discharge therefrom whereby a homogenizing effect is exerted upon said materials.

10. A mixer having a mixing chamber characterized by a radial outer portion of conical curvature in cross-section and a rotor therein provided with a stirrer, said mixer being characterized by means to introduce to said mixing chamber materials to be treated, and being further characterized by mixing elements having relatively large clearances and by means to regulate the flow of materials through said mixer by controlling the discharge therefrom, said means operating under a regime of constant pressure, and including a valve at the discharge region from said mixer, whereby a homogenizing effect is exerted upon said materials.

11. A mixer having a plurality of mixing chambers and provided with means to introduce to one or more said mixing chambers materials to

be treated seriatim therein and a shaft having a plurality of channels each communicating with one of said chambers, and adapted to permit introduction to said chambers selectively of a plurality of materials independently of each other, each characterized by a radial outer portion of conical curvature in cross-section, and of said first mentioned means of introduction of materials to said mixer, and means to control and regulate said selective introduction.

12. A mixer having a mixing chamber and a stirrer adapted to co-operate with the walls of said chamber to promote centrifugal distribution of the materials, provided with a terminal discharge opening and an intermediate outlet, said intermediate outlet being situated adjacent to the periphery of said mixing chamber, and a by-pass adapted to receive from said outlet a portion of the partly treated materials, under the additional head resulting from said centrifugal action, and to return said portion to an earlier phase for retreatment.

13. A mixer having a casing including a collecting inlet chamber, a series of mixing chambers and a collecting outlet chamber, arranged in the order named, a rotor comprising a shaft provided with a radial stirrer in each of said chambers, and inlet and discharge openings for said chambers respectively, certain of said openings being tangential, and certain of said openings being perpendicular.

14. A mixer having a mixing chamber characterized by a radial outer portion of conical curvature in cross-section, and further characterized by a rotor including a stirring vane in the form of a disc of uniform thickness with peripheral notches adapted to receive material delivered thereto by said conical walls, and to return the same recurrently to said walls for repeated treatment.

15. A mixer having one or more mixing chambers and a rotor having a radial stirrer of a certain radius operating in each of said chambers and cooperating therewith to produce mixing conditions of high turbulence in the materials in said mixing chambers, and a plurality of collecting chambers having peripheral walls of toric cross-section and stirrers of relatively short radii, whereby said stirrers serve in their respective collecting chambers, one to premix said materials in relative tranquility and feed said materials evenly into said region of turbulence, and another stirrer to promote a condition of relative tranquility in the region of discharge of the treated product from said mixer.

16. A mixer having one or more mixing chambers and a rotor having a radial stirrer of a relatively large radius operating in each of said chambers, and cooperating therewith to produce conditions of high turbulence in said mixing chambers, and a plurality of collecting chambers, a stirrer of relatively short radius operating in each of said collecting chambers, clearing its walls with a larger clearance than is characteristic of the clearances in the mixing chambers, whereby said stirrers serve in their respective collecting chambers, one to premix the intaken materials in a condition of minor turbulence and feed the premixed materials evenly into said region of high turbulence, and another stirrer cooperating to withdraw evenly the mixed materials from said region of high turbulence and discharge them in a condition of minor turbulence.

17. A continuous process of treating in a confined space materials having a fluid constituent comprising first imparting thereto in said confined space a minor centrifugal impetus, then imparting to said materials an additional and major centrifugal impetus combined with a turbulent condition and finally positively feeding and subjecting the material to a minor centrifugal impetus for discharging the same from said space.

18. A continuous process of treating in a confined space materials at least one of which is a fluid, said process comprising the steps of first intermingling the ingredients in a relatively tranquil stage, then positively creating a condition of turbulence in which said ingredients are admixed to the desired degree, and thereafter maintaining said state of admixture in a relatively tranquil condition for discharge of the product from said confined space.

19. The process of treating materials comprising the steps of continuously feeding materials to a mixing system, continuously mixing said materials in said system, continuously discharging from said system the admixed materials, said mixing step being performed under predetermined conditions of pressure and in a manner adapted to create an additional degree of pressure by developing a centrifugal moment in the mixture of said materials, and the further step of utilizing said added degree of pressure, at a certain stage of the treatment, to return, within a closed conduit free from exposure to the atmosphere, a predetermined and unsegregated portion of said mixture, to the earlier stage for re-treatment, whereby a more effective condition of mixing is propagated and maintained in said system.

GASTON S. P. DE BETHUNE.