J. B. HODAPP.

FURNACE.

APPLICATION FILED JAN. 18, 1912.

1,068,902.

Patented July 29, 1913.

3 SHEETS—SHEET 1.

Fig. 1.

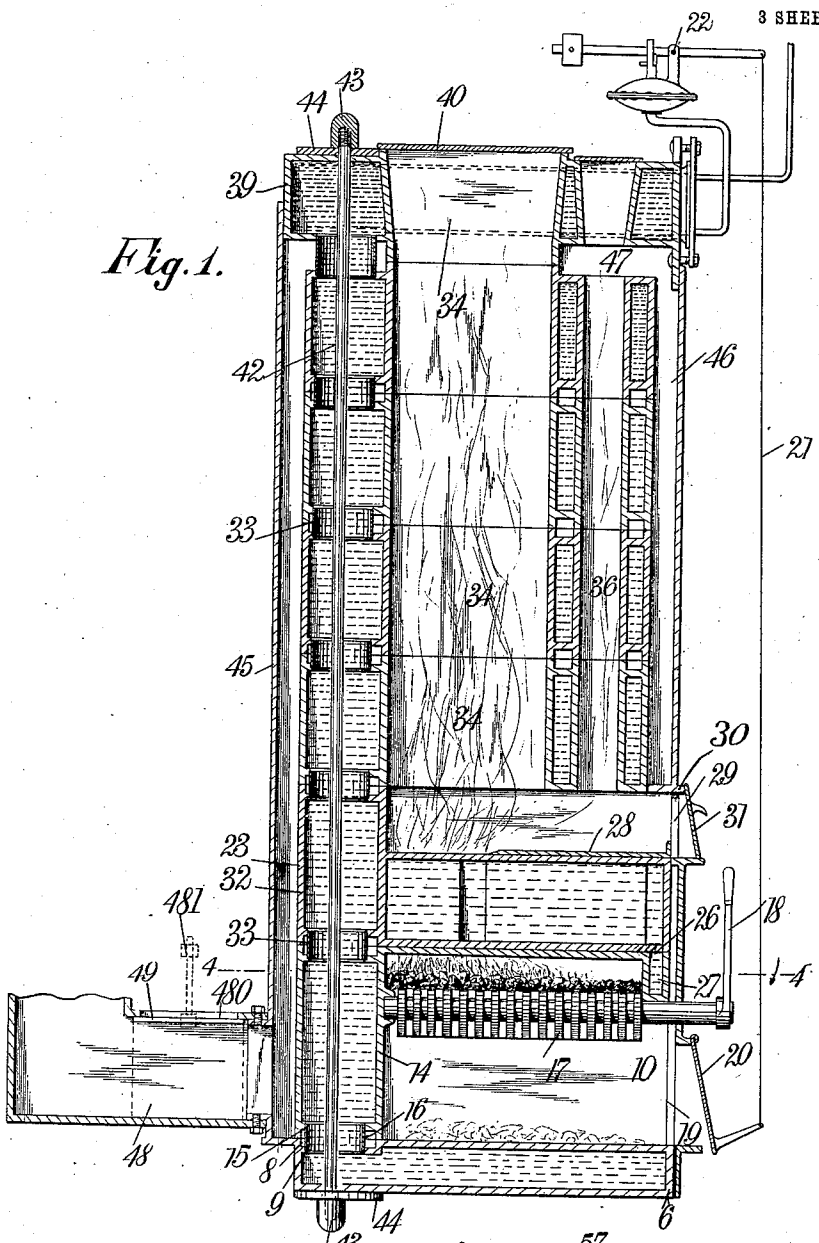

Fig. 5.

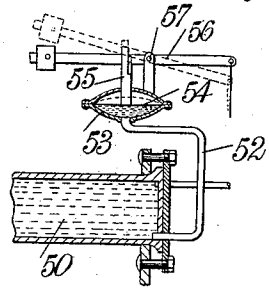

WITNESSES

Howard L. Thompson

W. S. Orton.

INVENTOR

John B. Hodapp

BY Munn & Co

ATTORNEYS

COLUMBIA PLANOGRAPH CO., WASHINGTON, D. C.

J. B. HODAPP.

FURNACE.

APPLICATION FILED JAN. 18, 1912.

1,068,902.

Patented July 29, 1913.

3 SHEETS—SHEET 2.

Fig. 2.

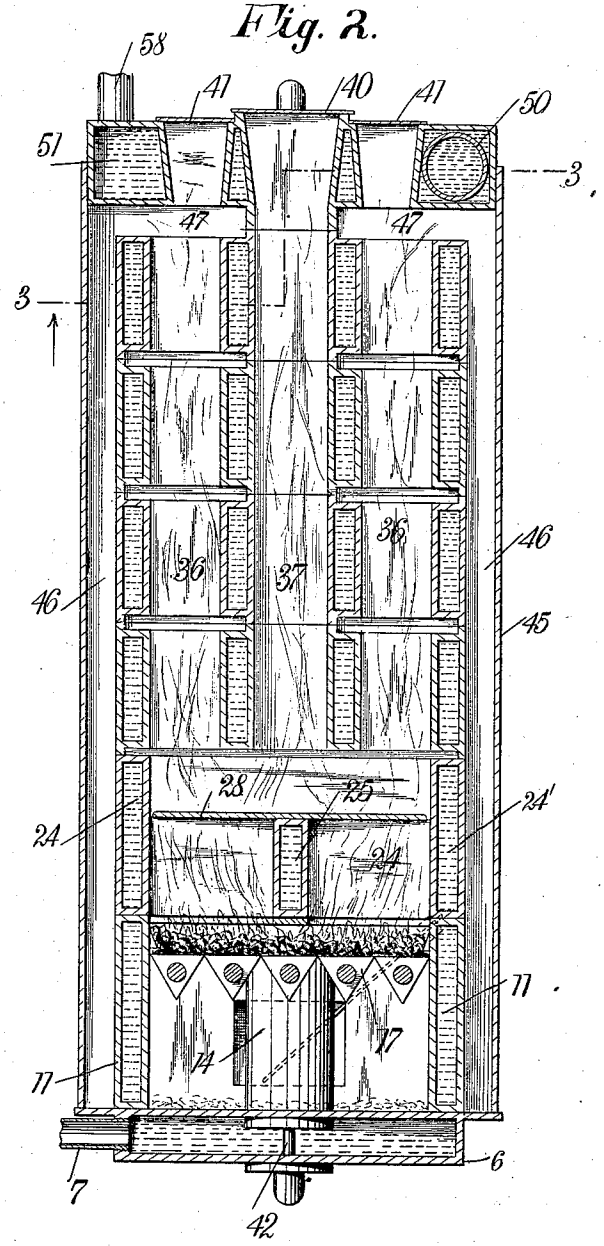

WITNESSES

Howard C. Thompson

W. S. Orton

INVENTOR

John B. Hodapp

BY Munn & Co.

ATTORNEYS

COLUMBIA PLANOGRAPH CO., WASHINGTON, D. C.

J. B. HODAPP.

FURNACE.

APPLICATION FILED JAN. 18, 1912.

1,068,902.

Patented July 29, 1913.

3 SHEETS—SHEET 3.

Fig. 3

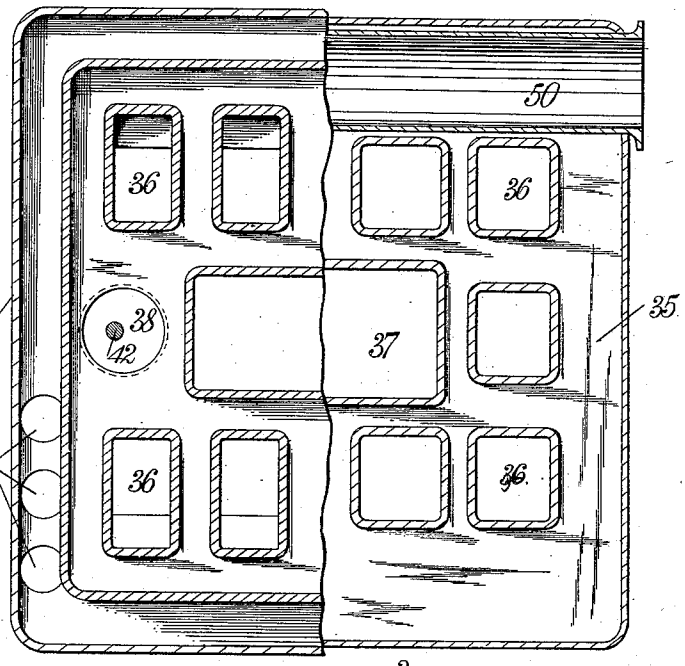

Fig. 4.

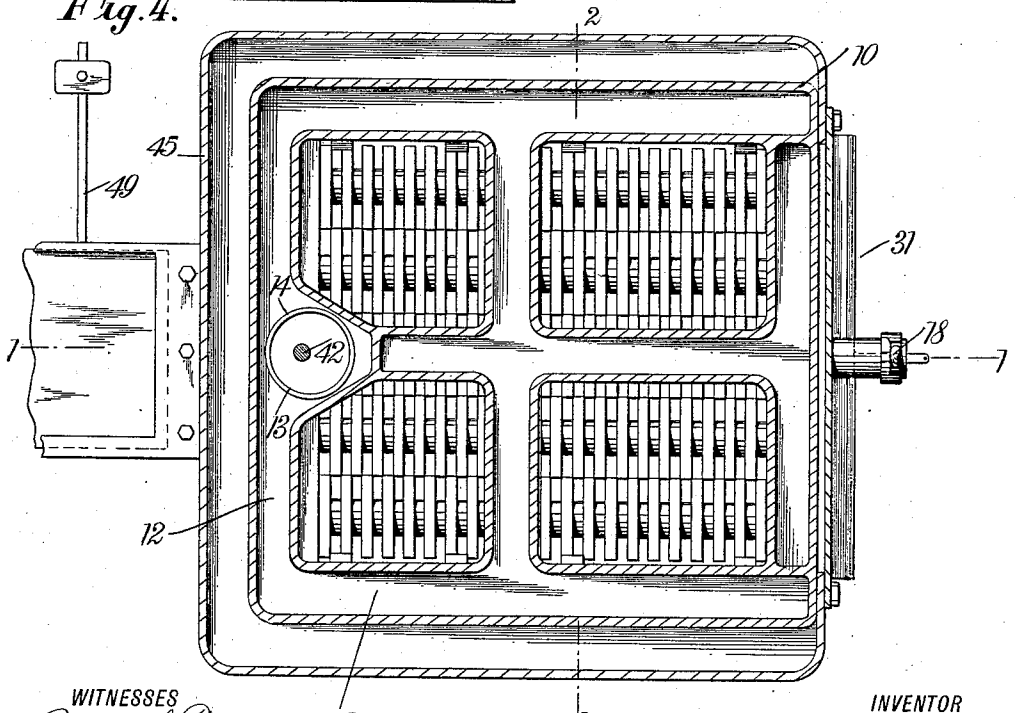

WITNESSES

Howard L. Thompson

W. S. Orton.

INVENTOR

John B. Hodapp

BY Munn & Co.

ATTORNEYS

COLUMBIA PLANOGRAPH CO., WASHINGTON, D. C.

UNITED STATES PATENT OFFICE.

JOHN B. HODAPP, OF MANKATO, MINNESOTA.

FURNACE.

1,068,902. Specification of Letters Patent. Patented July 29, 1913.

Application filed January 18, 1912. Serial No. 671,783.

To all whom it may concern:

Be it known that I, JOHN B. HODAPP, a citizen of the United States, and a resident of Mankato, in the county of Blue Earth and State of Minnesota, have invented a new and Improved Furnace, of which the following is a full, clear, and exact description.

My invention relates to a new and improved form of furnace, and relates more particularly to that class of furnaces built of independent sections.

An object of my invention is to provide a furnace of interchangeable parts having a relatively large heating space in proportion to the amount of water subjected to the heat.

A further object of my invention is to provide a means for regulating the volume of fire in the fire box.

A further object of my invention is to provide an automatic regulator for the parts.

A still further object is to provide an automatic damper.

I attain the above outlined objects by constructing the furnace of separate superposed hollow compartments, having a fluid connection between the several compartments, all of said compartments being united together by a single fastening rod. In one of these compartments is disposed a sliding plate adapted to regulate the opening above the fire box, to control the volume of the fire. Within the hot water in the system is disposed a closed receptacle, the water in which actuates a draft-controlled mechanism to regulate the supply of air to the fire.

With the above and other objects in view, as will more fully hereinafter appear, the present invention consists in certain novel details of construction and arrangement of parts hereinafter fully described, illustrated in the accompanying drawings, and more particularly pointed out in the appended claims.

Reference is to be had to the accompanying drawings, forming a part of this specification, in which similar characters of reference indicate corresponding parts in all the figures, and in which—

Figure 1 is a vertical transverse sectional view taken through a preferred embodiment of my invention on the line 1—1 of Fig. 4; Fig. 2 is a view similar to Fig. 1 but taken at right angles to the same, and on the line 2—2 of Fig. 4; Fig. 3 is a horizontal sectional view taken on the line 3—3 of Fig. 2; Fig. 4 is a horizontal section view taken on the line 4—4 of Fig. 1 and looking in the direction of the arrow; and Fig. 5 is an enlarged fragmentary sectional view showing the automatic draft-regulating means.

In the embodiment of my invention disclosed in the accompanying illustrations, the furnace is constructed of a series of superposed hollow sections. The bottom section 6, the top of which constitutes the ash-pit, is of a general hollow rectangular construction adapted to be filled with water, extending into the rear end of which section is threaded a pipe connection 7, through and by means of which water is fed to the furnace. The rear top surface of the section 6 has a depressed circular portion 8, which depressed portion is recessed at 9, to form a fluid outlet for the water in said section.

Resting on the top of the section 6 is a fire-box section 10, of the same horizontal configuration as the section 6, said fire-box section having hollow side walls 11, a hollow receptacle 27 extending across the front and a hollow back wall 12, which back wall is enlarged at 13 and has depending therefrom a pipe 14, the lower open end 15 of which is in vertical alinement with the recess 9, said open end and recess being connected by means of a nipple 16. By this means a fluid connection is obtained between the water in the section 6 and the water in the fire-box section 10. Mounted in the fire-box section is a conventional form of fire grate 17 actuated by a grate lever 18.

The ash pit opening 19 in the front of the section 10 is closed by means of a drop door 20, actuated through the flexible connection by means of an automatic draft control 22 hereinafter described.

Disposed on top of the fire-box section 10 is a section 23, which will be designated as the "heat regulating section." This section is of the same horizontal configuration as the two sections hereinbefore described. This section 23 has hollow side water-containing walls 24′ disposed in vertical alinement with the hollow walls 11 and inclosing a heating space 24 above the grate 17. The space has extending from front to rear and side to side of the furnace, a hollow water-containing passageway 25 in fluid connection with a hollow receptacle 27 extending across the front of and constituting part of the fire-box section 10, and with the hollow space in the side walls 11. The passageway 25 is of less height than the walls 24′. Positioned on top of the passageway 25 is a

plate 28 bridging the space from the inner walls. This plate may be moved forwardly and rearwardly to open or close the heating space 24 thereby regulating the amount of heat passing from the fire-box through the furnace. Access is obtained to the plate 28 through a port 29 in a shoulder 30 hereinafter described, which port is closed by means of a door 31.

The rear portion of the section 23 has a pipe 32 superposed on, similar in construction to, and constituting an extension of the pipe 14, the two pipes 14 and 32 being connected together by means of a nipple 33, this connection being similar in construction to the connection hereinbefore described with reference to the sections 6 and 10.

Superposed on the section 23 is a section 34, and upon this latter section are provided as many of these sections as are desired to complete the furnace. Each of the sections 34 is of the same horizontal configuration as the sections 6, 10 and 23 hereinbefore described, and comprises a hollow water-containing compartment 35, extending vertically through which is a series of heat openings 36, the heat openings in each of the sections being in vertical alinement, so as to form a heat-conveying passage to the top of the furnace. Disposed centrally in each of the sections 34, is a centrally-disposed passageway 37 constituting the magazine through which fuel may be added to the grate from the top of the furnace. In the central rear portion the top and bottom of each of the sections 34 have vertically alined recesses 38 therein, which recesses are in vertical alinement with the recess 9 hereinbefore described, and the recess in the top of one section is in alinement with the recess in the bottom of the next adjacent section, to form a fluid passageway between the superposed sections, thereby uniting all of the water in the system. These alined apertures are united by means of nipples 33 hereinbefore described.

Superposed upon the uppermost of the sections 34 is a pipe section 39 similar in construction to the sections 34 but having the magazine passageway 37 flaring slightly outward, as shown more particularly in Fig. 1, and closed by means of a drop door 40. The upper end of each of the openings 36 is closed by means of a cover 41.

The several sections are held together by means of a rod 42 passing vertically through the alined pipes 14, 19 and having on opposite ends a nut 43 bearing on washers 44 at the top and bottom of the furnace. Disposed about the superposed sections, as above outlined, is a metal shell 45 spaced apart from the said sections, to form therebetween a space 46 for the products of combustion, said space surrounding the sections on the two sides and back and upper front of the same, and in fluid connection with the openings 36 by means of a passageway 47, which passageway is connected to the pipe 48 disposed at the lower rear center of the furnace, which pipe is controlled by the conventional form of damper 49. The balanced damper 49 is hinged to one side and within the pipe 48 and normally closes the fresh air inlet 480 in the top of the pipe by means of a weighted arm 481 extending from the damper 49 and through the side of the pipe 48. The pressure of the draft in the pipe 48 normally maintains the damper in position closing the inlet but a strong draft from the chimney will draw the damper to an open position permitting fresh air to flow into the pipe until the draft is reduced when the damper will return to its normal closed position. It will be seen by this construction, that the heated air passes from the grate 17, through the heating space 24, through the several heat openings 36 about the passageway 47, then back downward about the outside of the sections, through the exhaust space 46 and out through the pipe 48, thereby causing this heated air to flow over a relatively large area of water-heating surface, to utilize a large portion of the heat in the products of combustion.

The admission of air to the fire-box is controlled by the temperature of the water in the several sections, and the preferred means for obtaining this regulation is by disposing a closed cylinder 50 within a water space 51 in the top section 39 and connecting this cylinder by means of pipe connection 52 to a hollow disk 53, which hollow disk has extending horizontally therein and fastened between the upper and the lower halves of the disk, a flexible diaphragm 54 bearing upon which diaphragm is a support 55 resting on a weighted lever 56 at one side of its fulcrumed point 57. To the lever on the opposite side of the fulcrumed point 57, is attached the flexible connection 21 which controls the drop door 20. It will be seen that as the water in the system reaches a predetermined temperature, the water in the cylinder 50 will expand, forcing the diaphragm 54 and support 56 upward, thereby permitting the drop door 20 to fall of its own weight, to close the ash-pit opening 19. As the water in the several sections becomes heated, it will rise through the said sections and out through the heating pipes 58 to be conveyed to the heaters and radiators as desired.

While a preferred embodiment of the invention has been described, it is to be understood that many changes could be made in the above construction and many apparently widely different embodiments of this invention could be made without departing from the scope thereof. It is intended that all

matters contained herein in the above description or shown in the accompanying drawings, shall be interpreted as illustrative and not in a limiting sense. It is also to be understood that the language used in the following claims is intended to cover the full scope of the invention and is not to be given any narrower construction than the prior art demands, and that materials, sizes and relativities of parts are non-essential, except as called for in the claims.

Having thus described my invention, I claim as new and desire to secure by Letters Patent:

1. A hot water furnace, comprising a series of independent sections mounted one upon the other and having water passages at the rear registering with each other, a water inlet in the lowermost section, a water outlet in the uppermost section, one of the sections constituting the fire box and the one next above a heating section the fire box section having a water chamber extending across the front of the same, and the heating section having a heating space, and a water passageway communicating with the water chamber of the fire box section, each of the sections above the heating section having a water compartment, alined passages to form a fuel magazine, and alined heat conducting passages, a casing surrounding the sections and spaced therefrom and forming a passage for the products of combustion and with which the heat passages communicate, and a smoke pipe at the lower end of the casing and with which the said passage for the products of combustion communicates.

2. A hot water furnace, comprising a series of independent sections mounted one upon the other and having water passages at the rear registering with each other, a water inlet in the lowermost section, a water outlet in the uppermost section, one of the sections constituting the fire box and the one next above a heating section, the fire box section having a water chamber extending across its front, and the heating section having a heating space and a water passage way communicating with the water chamber of the fire box section, each of the sections above the heating section having a water compartment, central alined passages forming a fuel magazine and alined heat conducting passages, the passage of the uppermost section being closed at its outer end, a rod extending through the water passages at the rear of the sections and securing them together, a casing surrounding the sections and spaced therefrom and forming an annular passage for the products of combustion and with which the heat passages communicate, and a smoke pipe at the lower end of the casing and with which the annular passage for the products of combustion communicates.

3. In a hot water furnace, a hollow bottom section with which is connected a water supply, a fire box section resting on the bottom section and having hollow side and rear walls and a water chamber extending across its upper front portion, the space between the rear hollow wall of said section communicating with the bottom section, and a heating section on the fire box section and having hollow walls, the space between the rear walls communicating with the fire box section, said heating section having a cross shaped water passage communicating with the spaces between the side walls and the chamber at the front of the fire box section.

4. In a hot water furnace, a hollow base section, a fire box section resting on the base section and having a water chamber at the front and hollow side and back walls from the latter of which extends a short pipe in communication with the base section, a heating section on the fire box section, said heating section having hollow side walls, a passage communicating with the space between the side walls and the chamber at the front of the fire box section, and a short pipe at the rear registering with the pipe of the fire box section, the passage of the heating section being of less height than the section, and a movable plate resting upon the said passage for regulating the amount of heat passing from the fire box through the furnace.

5. A hot water furnace, comprising a hollow base section, a fire box section resting on the base section and having a water chamber at the front and hollow side and back walls, from the latter of which extends a short pipe in communication with the base section, a heating section on the fire box section, said heating section having hollow side walls, a passage communicating with the space between the side walls and the chamber at the front of the fire box section, and a short pipe at the rear registering with the pipe of the fire box section, the passage of the heating section being of less height than the section, a cover for said passage, and a plurality of sections, each having a water compartment and heat passages extending therethrough, the said sections being arranged on the heating section one above the other and forming a central passage.

In testimony whereof I have signed my name to this specification in the presence of two subscribing witnesses.

JOHN B. HODAPP.

Witnesses:
C. O. DAILEY,
MAMIE ALBERT.

Copies of this patent may be obtained for five cents each, by addressing the "Commissioner of Patents, Washington, D. C."