F. X. RUDLER.

FOLDING RULE.

APPLICATION FILED APR. 7, 1911.

1,069,186. Patented Aug. 5, 1913.

Fig. 1.

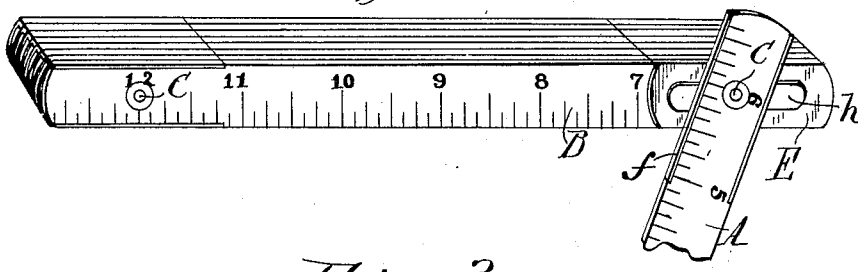

Fig. 2.

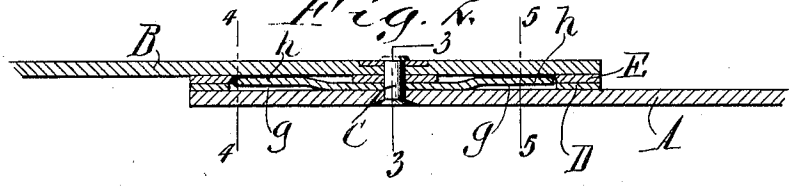

Fig. 3.

Fig. 4.

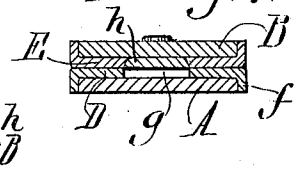

Fig. 5.

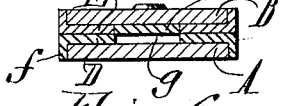

Fig. 6.

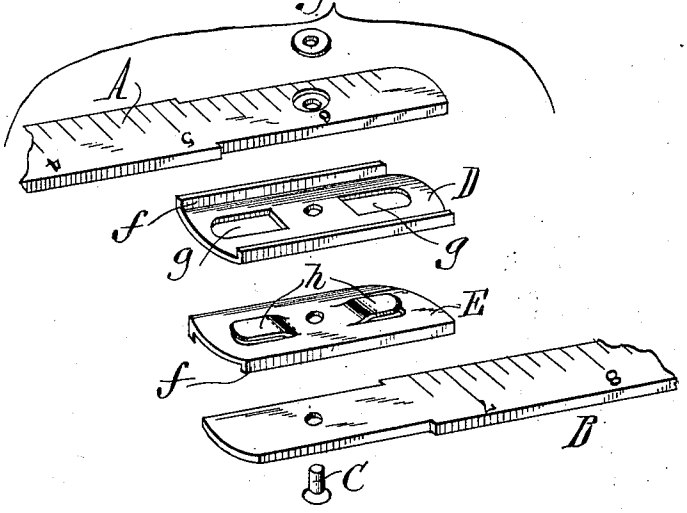

Witnesses:-
Alfred Bakenhagen.
Richard Sommer

Inventor
Frank X. Rudler
by Geyer & Popp
Attorneys.

UNITED STATES PATENT OFFICE.

FRANK X. RUDLER, OF BUFFALO, NEW YORK, ASSIGNOR TO JAMES H. McCAFFREY, OF BUFFALO, NEW YORK.

FOLDING RULE.

1,069,186. Specification of Letters Patent. Patented Aug. 5, 1913.

Application filed April 7, 1911. Serial No. 619,482.

To all whom it may concern:

Be it known that I, FRANK X. RUDLER, a citizen of the United States, residing at Buffalo, in the county of Erie and State of New York, have invented new and useful Improvements in Folding Rules, of which the following is a specification.

This invention relates to the class of rules composed of sections which are jointed to fold laterally and locked in their folded and unfolded positions by spring catches or tongues.

One of the objects of the invention is to improve the construction of such joints with a view of increasing the leverage of the spring-tongues and rendering the joint tight and firm when locked, without however increasing the size and weight of the parts to an objectionable extent.

A further object of the invention is the production of a light, strong, neat and compact joint comprising few parts which can be cheaply stamped of sheet metal.

In the accompanying drawings: Figure 1 is a fragmentary perspective view of a rule embodying the invention. Fig. 2 is a longitudinal section of one of the joints, on an enlarged scale. Figs. 3, 4 and 5 are transverse sections on the correspondingly numbered lines in Fig. 2. Fig. 6 is a perspective view of the parts of the joint separated from one another.

Similar letters of reference indicate corresponding parts throughout the several views.

A and B indicate a pair of the rule sections which are graduated in the customary manner and pivotally connected together by a rivet C. Interposed between the pivoted portions of the adjoining sections are a pair of joint-plates D and E, preferably stamped of brass or other suitable sheet metal. These plates are secured to the respective sections by any suitable means but are preferably provided at their side edges with longitudinal flanges *f* which embrace the edges of the corresponding rule sections, the latter being recessed to receive these flanges and produce a flush joint between them and the edges of the sections, as shown in the drawings. The plates are provided with central openings through which the rivet or pivot C passes. One of these joint plates, say the plate D is provided on opposite sides of the pivot with longitudinal slots or recesses *g* arranged in alinement with each other. The side edges of these slots are preferably parallel while their outer ends are rounded. The other plate E is provided on opposite sides of the pivot C with longitudinal spring-tongues or catches *h* adapted to interlock with the slots *g*, both in the folded and unfolded positions of the sections. In the preferred construction shown, these tongues are stamped in one piece with said plate. Normally, the tongues are slightly raised above the face of the plate, so that upon swinging the sections out of alinement with each other, the tongues are depressed flush with the plate, while when the sections reach a position in line with each other, either folded or unfolded, the tongues snap into the slots *g* of the opposing plate and lock the sections. The side edges of the tongues are parallel and constructed to fit snugly into the slots *g*, so that when these members are interlocked the sections are tightly locked in position. The rounded free ends of the tongues are preferably beveled on their front sides to facilitate their disengagement from the slots. As shown in the drawings, the free ends of the tongues face outwardly in opposite directions, or toward the ends of the plate on which they are formed. By this arrangement their free ends are located remote from the pivot C of the joint, giving the tongues a relatively long locking leverage without enlarging the dimensions of the joint-plates to such an extent as to render the joint heavy and clumsy. While a tightly-locked joint is thus obtained, the necessary lightness and compactness are retained to render the rule convenient in use. The parallel arrangement of the side edges of the spring-tongues and the coöperating locking slots furnishes an extended longitudinal bearing of the interlocked members, rendering the joint stiff and tight transversely of the rule-sections both in their folded and unfolded positions, while the beveled free ends of the tongues permit the sections to be unlocked without undue exertion.

As shown in the drawings, the locking slots and tongues preferably terminate short of the ends of the joint-plates, in order to leave the plates solid and stiff across their

ends and prevent displacement of the parts on opposite sides of the slots and the openings formed by stamping the tongues.

As the joint comprises but three essential parts, viz: the two plates and the connecting rivet, it is exceedingly simple and can be produced at correspondingly small cost, the shape and construction of the plates being such that each can be stamped from a single blank of sheet metal.

I claim as my invention:

1. The combination of a pair of rule-sections, joint-plates secured to the respective sections, and a pivot connecting the plates, one of the plates being provided on opposite sides of said pivot with longitudinal locking slots terminating short of the ends of said plate, and the other plate having a pair of longitudinal spring-tongues constructed to automatically interlock with said slots both in the folded and unfolded positions of the sections, said tongues extending in opposite directions and their free ends facing away from said pivot, the tongues terminating short of the ends of the plate and of the section by which they are carried.

2. The combination of a pair of rule-sections, joint-plates secured to the respective sections, and a pivot connecting the plates, one of the plates being provided on opposite sides of said pivot with longitudinal locking-slots having parallel side edges and the other plate having a pair of longitudinal spring-tongues adapted to interlock with said slots and having corresponding parallel side edges, the free ends of said tongues being arranged to face opposite ends of the corresponding plate.

3. The combination of a pair of rule-sections, joint-plates secured to the respective sections, and a pivot connecting the plates, one of the plates being provided on opposite sides of said pivot with longitudinal locking slots having parallel side edges and the other plate having a pair of longitudinal spring-tongues adapted to interlock with said slots and having corresponding parallel side edges, the free ends of said tongues being beveled on their front sides and arranged to face the opposite ends of the corresponding plate.

Witness my hand this 5th day of April, 1911.

FRANK X. RUDLER.

Witnesses:

C. F. Geyer,

E. M. Graham.