April 21, 1964 B. O'BYRNE 3,129,486

NEEDLE PUNCHING MACHINES

Filed Feb. 21, 1962 4 Sheets-Sheet 1

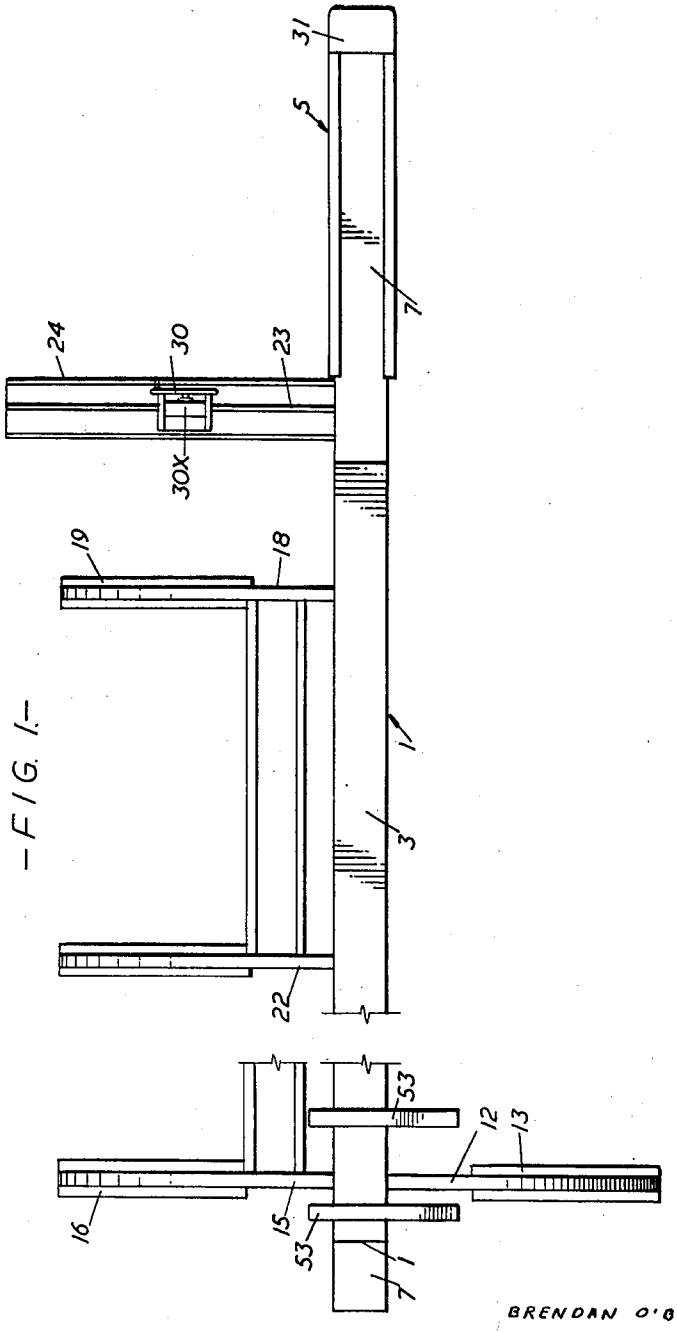

FIG. 1

INVENTOR:
BRENDAN O'BYRNE
BY
Abraham A. Saffitz
ATTORNEY

April 21, 1964 B. O'BYRNE 3,129,486

NEEDLE PUNCHING MACHINES

Filed Feb. 21, 1962 4 Sheets-Sheet 2

FIG. 3

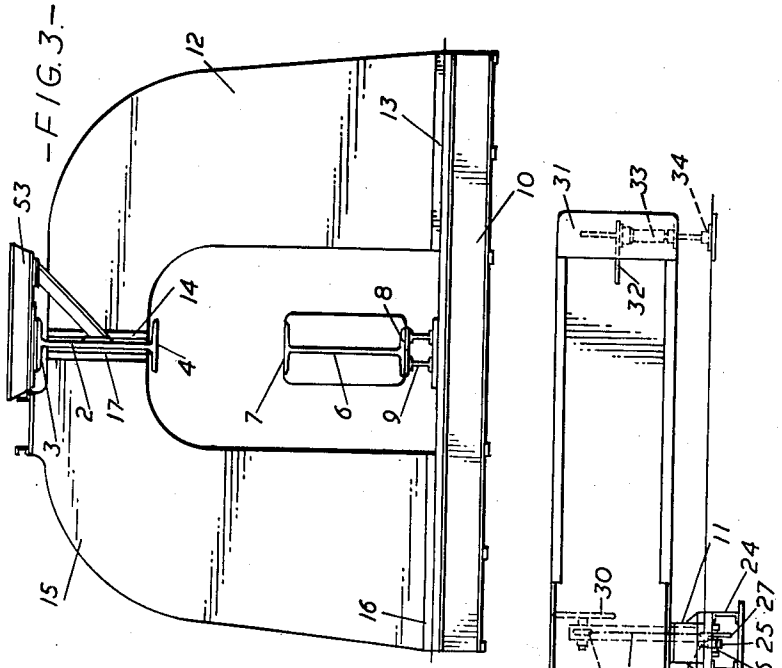

FIG. 2

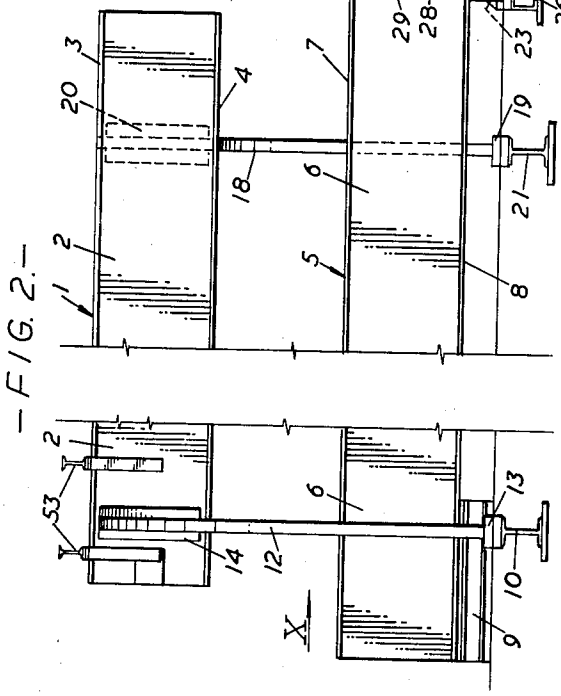

INVENTOR:
BRENDAN O'BYRNE
BY
Abraham A. Saffitz
ATTORNEY

April 21, 1964 B. O'BYRNE 3,129,486

NEEDLE PUNCHING MACHINES

Filed Feb. 21, 1962 4 Sheets-Sheet 3

-FIG. 4-

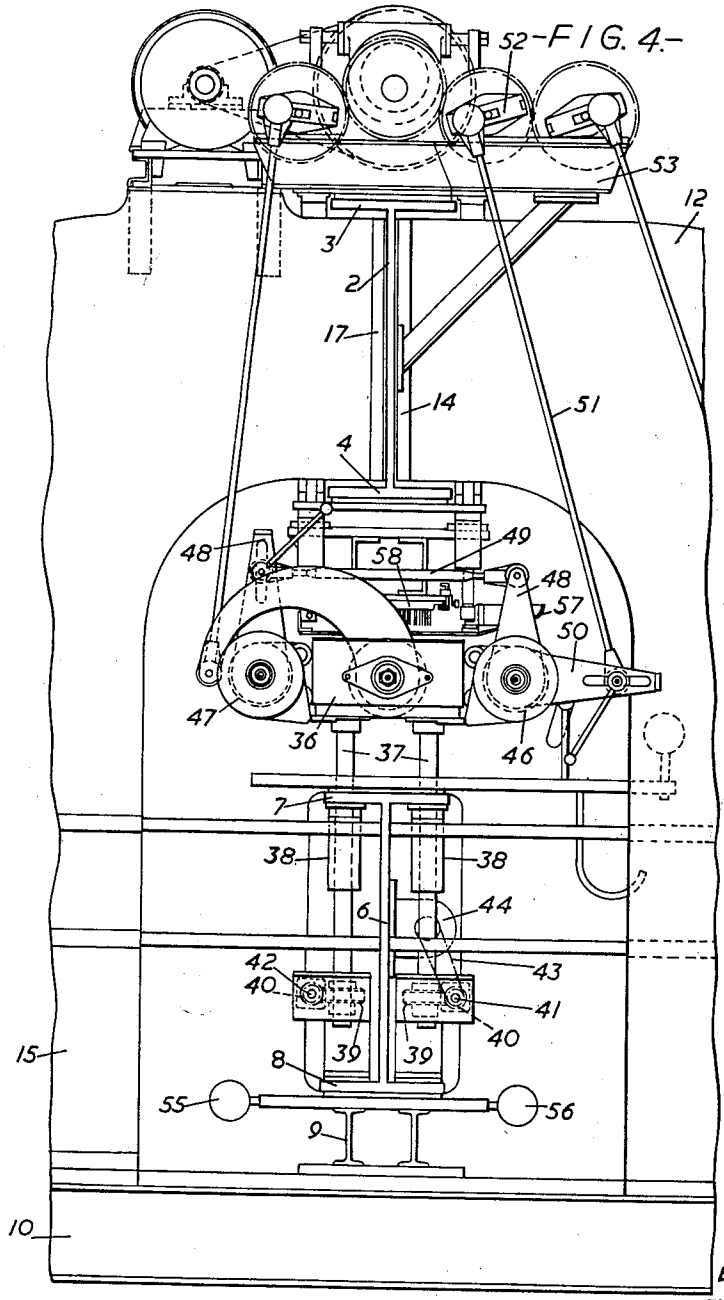

INVENTOR:
BRENDAN O'BRYNE
BY
Abraham A. Saffitz
ATTORNEY

April 21, 1964 B. O'BYRNE 3,129,486

NEEDLE PUNCHING MACHINES

Filed Feb. 21, 1962 4 Sheets-Sheet 4

-FIG. 5.-

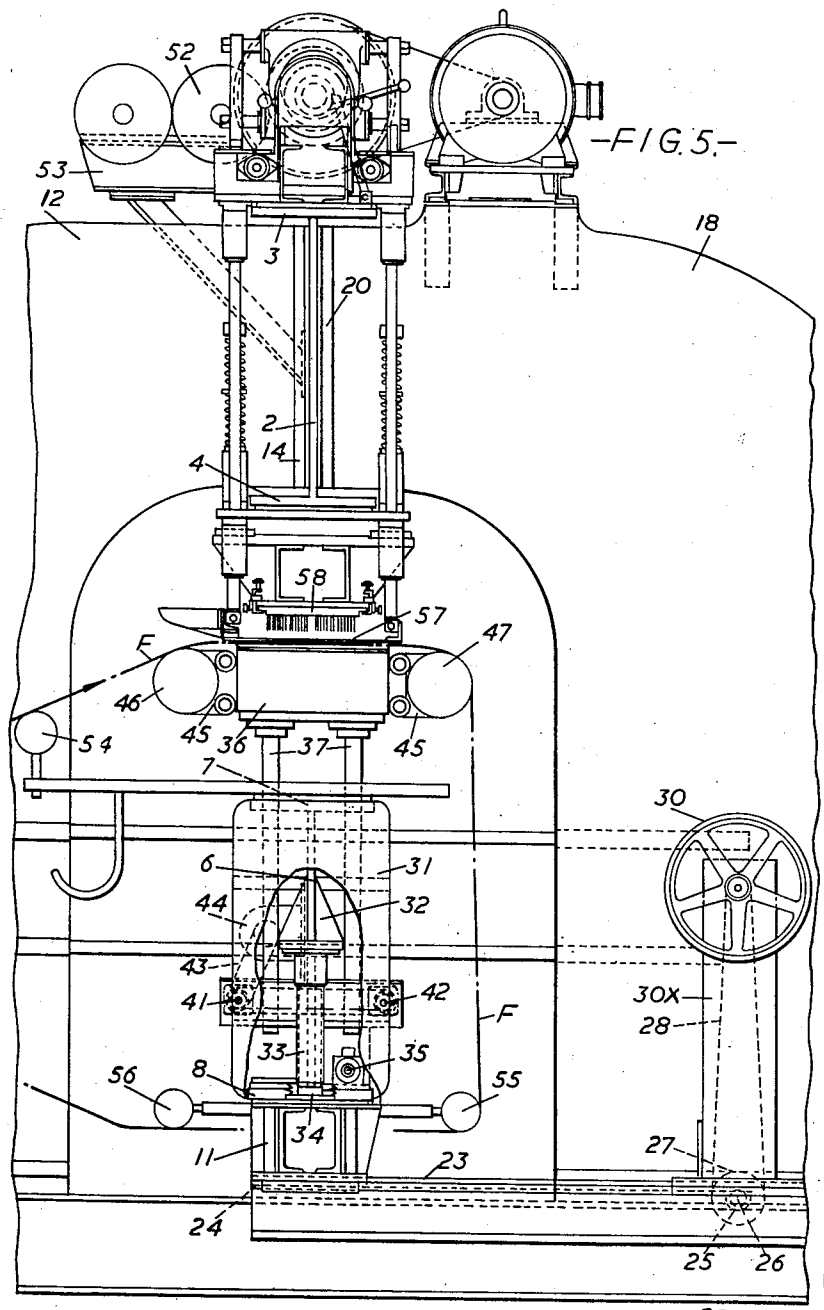

INVENTOR:
BRENDAN O'BYRNE
BY
Abraham A. Saffitz
ATTORNEY

United States Patent Office 3,129,486
Patented Apr. 21, 1964

3,129,486

NEEDLE PUNCHING MACHINES

Brendan O'Byrne, Batley, England, assignor to William Bywater Limited, Leeds, England

Filed Feb. 21, 1962, Ser. No. 174,782
5 Claims. (Cl. 28—4)

This invention relates to needle punching machines for use, for example, in needling endless woven felts such as are used in the paper-making industry. Felts and like endless materials of greatly increased widths are now required to be needled, but these greater widths reach a figure which renders it difficult or impossible to cope with them on needle punching machines of known construction, since they involve new considerations relating to the span of the machine, the weight of the needle board and its operating mechanism, the means of inserting and withdrawing the endless felt into and from the machine, and other features necessary to such a machine.

It is an object of this invention to provide a machine capable of dealing with such extra wide felts, for example of a width up to (say) 450 inches or more.

Another object is to construct the frame of the machine so that it will have the strength and stability to support the great weight of mechanism necessary for such a wide machine, particularly the mechanism which has to be rapidly reciprocated to perform the needling operation, and yet will allow for the comparatively easy insertion and removal of the endless felts onto and off the needle bed.

A further object is to so construct the support means for the needle bed that it can be supported at the "open" end of the machine alternatively at one of two points to enable an endless felt to be inserted and removed in two stages.

A still further object is to mount on the needle bed or its support means driven feed and draw rollers arranged to pass the material to be treated across the bed whereby, when the bed is adjusted in height relative to the reciprocatable needle board to vary the depth of penetration of the needles, these rollers will move correspondingly to maintain a constant tension of the material lying across the bed.

The present invention aims at achieving these objects and others which will be evident from the ensuing description, and in order that the nature of the invention and manner of carrying it into effect may be clearly understood I shall now describe by way of example one construction of machine according to the invention with reference to the accompanying drawings, but I desire to make it clear that other suitable constructions of machine may be evolved for carrying out the invention and that I claim protection for all such constructions within the scope of the appended claims.

In these drawings:

FIGURE 1 is a broken plan of a machine frame constructed according to the invention, the centre portion being omitted as this will depend in each case on the width of the machine;

FIGURE 2 is a broken elevation of the frame shown in FIGURE 1, omitting one of the intermediate members shown therein, and including movable means for supporting one end of the bottom beam, at the "open" end of the machine.

FIGURE 3 is an end elevation of the frame looking at the "closed" end in the direction of arrow X in FIGURE 2;

FIGURE 4 is a broken end elevation of a complete machine embodying the invention and showing the "closed" end of the machine;

FIGURE 5 is a broken end elevation corresponding to FIGURE 4 but showing the "open" end of the machine, a portion of a cover over the end of the bottom beam being cut away to show jacking means for such beam.

As shown most clearly in FIGURES 1 to 3, the machine frame includes top and bottom beams **1**, **5** of deep I section having their webs **2**, **6** in mutual vertical alignment and their upper and lower flanges **3**, **4** and **7**, **8** horizontal, the beams extending widthwise of the machine across the full span thereof. The bottom beam **5** is supported at the closed end of the machine upon a girder framework **9** secured upon a foundation girder **10**. The other end of the beam **5** is extended and is supported normally upon a withdrawable block or gap piece **11** to be referred to later.

At the closed end of the machine front and rear semi-arched end frame members **12**, **15** are disposed in mutual alignment with their bottom horizontal flanges **13**, **16** secured upon the foundation girder **10** and their top vertical flanges **14**, **17** on their upper arms secured to opposite faces of the web **2** of the top beam **1**. At the open end of the machine a similar semi-arched end frame member **18** has its bottom flange **19** secured upon a foundation girder **21** and its top flange **20** on its upper arm secured to the rear face of the top beam web **2**. One or more semi-arched intermediate frame members **22**, one of which is shown in FIGURE 1, are similarly secured to support the top beam **1** when the width of the machine makes this desirable. These frame members **12**, **15**, **18** and (where used) **22** act as cantilever or buttress supports.

The beams **1**, **5** may alternatively be of H or other suitable cross-section and may each consist of a single rolled steel joist or like girder as illustrated or may be fabricated from two or more sections. The end and intermediate frame members may be constructed of solid steel plate with or without strengthening ribs, or of other suitable form and material. In any event the construction of frame will provide a massive and sufficiently rigid support for the great weight of the top beam and all it has to carry, and yet will permit free access through the open end of the machine for insertion and removal of the endless felt, as the material will hereinafter be referred to.

Normally the bottom beam **5** rests upon and is bolted to the block **11** which is secured on a toothed rack bar **23** slidable in a horizontal slideway **24** extending rearwardly of the machine. The rack bar is engaged by a pinion **25** secured on a revolvable shaft **26** on which is also secured a chain wheel **27** drivable by a chain **28** from a chain wheel **29** which can be rotated by means of a handwheel **30**, the wheels **29**, **30** being supported in a standard **30X**.

At the end of the beam **5** within a cover **31** and fixed to an angle plate **32** secured on the beam end is an hydraulic jack **33** whose foot **34** can be forced down against the floor or foundations by power from a jack pump **35**. This down position of the foot is indicated by broken lines in FIGURE 2 which also shows the block **11** and its operating mechanism.

With the jack foot raised an endless felt can be drawn over the extended portion of the bottom beam as far as the block **11** and bunched up clear of the jack. The jack is then operated to take the weight of the bottom beam and all it carries and the block is unbolted and withdrawn by operating the handwheel. The felt can then be drawn right into the machine where it encircles the bottom beam and the needle bed.

As shown in FIGURES 4 and 5 the needle bed **36** is carried by pairs of vertical pillars **37** spaced at suitable intervals along its length. These pillars have screw-threaded portions passing through screw-threaded sleeves

38 secured on the flange 7 of the bottom beam 5, and on their lower ends are secured worm wheels 39 engaging worms 40 secured on two parallel horizontal shafts 41, 42 driven by a chain and chain wheel driving gear 43 from an electric motor 44 mounted on the bottom beam. This mechanism all mounted on the bottom beam, enables the height of the needle bed relative to the needle board to be adjusted.

The needle bed also supports in brackets 45 a feed roller 46 and a draw roller 47 which extend the full width of the bed and which can be intermittently rotated through ratchet mechanism (not illustrated) actuated by arms 48 coupled by link 49, one arm being operated through lever 50 and rod 51 by a crank device 52 mounted on a frame 53 secured on the upper flange 3 of the top beam 1. This operating mechanism for the feed and draw rollers might be varied and forms no part of this invention, but the mounting of these rollers upon the needle bed which is adjustably carried on the bottom beam 5 is a feature of the invention since it enables a constant tension of the felt to be maintained automatically in spite of adjustments in height of the bed being made to vary the depth of penetration of the needles.

The position occupied by the endless felt F is shown in FIGURE 5 where it passes over the feed roller 46 in front of the bed and the draw roller 47 behind the bed, being guided over freely rotatable long rollers 54, 55, 56 all supported from the bottom beam 5.

The top beam 1 supports the stripper plate 57 and needle board 58 which latter is reciprocated through its supporting pillars or rods by multiple driving mechanisms mounted upon the top beam along its length. These mechanisms may be of any suitable form and constitute no part of the present invention, but one convenient form is the subject of my copending U.S. application Serial Number 174,851, filed February 21, 1962, which is on the same date as this application.

I claim:

1. In a needle punching machine on a foundation base having a needle bed onto which an endless material to be needled is fed and above which a needle board is supported and arranged to be reciprocated relative to said bed to perform the needling operation, the combination of a top beam and a bottom beam extending the one above the other widthwise of the machine, a plurality of end frame assembly members of cantilever form each having their upper arms secured to the ends of said top beam with two of said end frame members at one end of the machine being opposed to one another and extending forwardly and rearwardly of said beams while another of said frame members at the other end of the machine extends rearwardly only to leave the front of the machine clear for insertion and removal of extra wide pieces of said endless material, means carried on said top beam for supporting said needle board and for reciprocating it vertically, and means carried on said bottom beam for supporting said needle bed.

2. In a needle punching machine, the combination of claim 1, wherein said plurality of frame assembly members include at least one intermediate frame member of cantilever form which is secured to said top beam at a point intermediate of the ends and extends rearwardly of the machine.

3. In a needle punching machine, the combination of claim 1, wherein said machine is provided with a foundation base and said bottom beam is provided with means for supporting said bottom beam at one end of the machine upon said foundation base, withdrawable means intermediate the other end of the machine opposite said supporting means for securing said bottom beam upon said foundation base, and jacking means for temporarily supporting the outer end of said bottom beam.

4. In a needle punching machine, the combination of claim 3, wherein said withdrawable support means consists of a block which is mounted on a rearwardly and horizontally extending slideway, a toothed rack bar secured to said block, extending rearwardly along said slideway, a pinion engaging said rack bar, and means for rotating said pinion to withdraw said block from its supporting position beneath said bottom beam and to return it to such position while said beam is temporarily supported at its outer end by said jacking means.

5. In a needle punching machine, the combination of claim 3, wherein said withdrawable support means consists of a block which is mounted on a rearwardly and horizontally extending slideway, a toothed rack bar secured to said block extending rearwardly along said slideway, a pinion engaging said rack bar, means for rotating said pinion to withdraw said block from its supporting position beneath said bottom beam and to return it to such position while said beam is temporarily supported at its outer end by said jacking means, height-adjusting mechanism for said needle bed carried on said bottom beam, and drivable feed and draw rollers carried on said bed arranged to pass the endless material across the bed, whereby when the bed is adjusted in height to vary the depth of penetration of the needles, said rollers move to maintain a constant tension of the material lying across the bed.

References Cited in the file of this patent

UNITED STATES PATENTS

2,004,709	Phillips	June 11, 1935
2,165,772	Walsh et al.	July 11, 1939