Oct. 28, 1930. C. W. BIESER 1,779,407

WATCHCASE BEZEL OR BACK

Filed Sept. 6, 1927

Fig. 1.

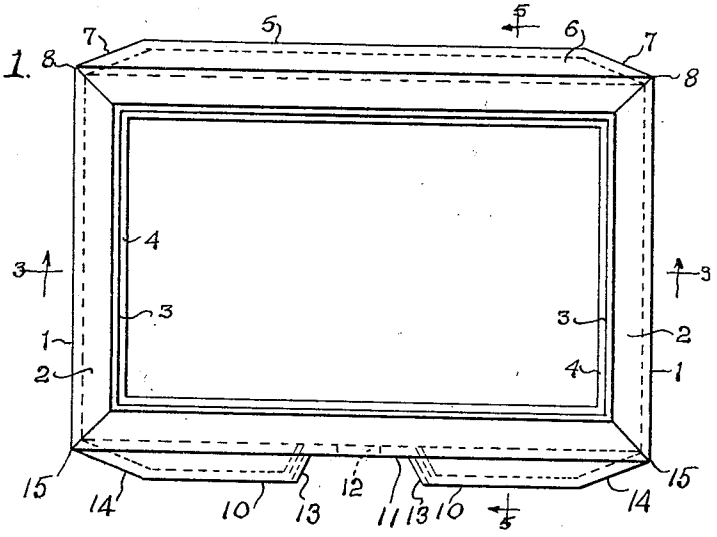

Fig. 2.

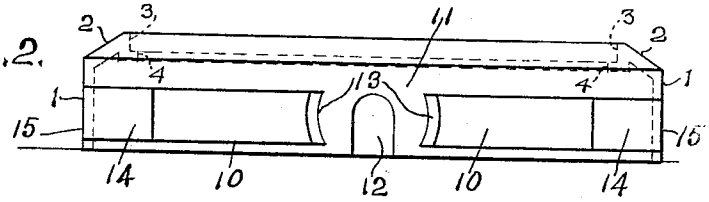

Fig. 3.

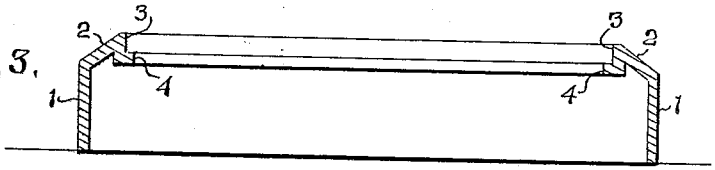

Fig. 4.

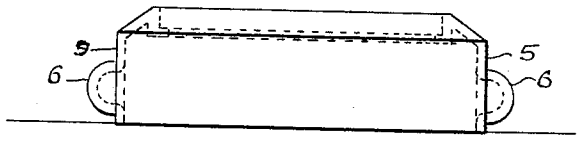

Fig. 5.

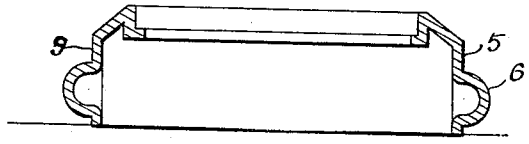

INVENTOR
CARL W. BIESER,
BY Toulmin & Toulmin,
ATTORNEYS

Patented Oct. 28, 1930 1,779,407

UNITED STATES PATENT OFFICE

CARL W. BIESER, OF CINCINNATI, OHIO, ASSIGNOR TO THE GRUEN NATIONAL WATCH CASE COMPANY, OF CINCINNATI, OHIO, A CORPORATION OF OHIO

WATCHCASE BEZEL OR BACK

Application filed September 6, 1927. Serial No. 217,649.

My invention relates to watch bezels.

It is the object of my invention to provide a one-piece extended center watch bezel or back.

It is the object of my invention to provide such a bezel or back which will present a pleasing and satisfactory appearance, which will facilitate production and reduce costs, and which will provide a very strong structure, eliminating the defects of soldering, which has previously been employed.

It will be understood that my invention is applicable to either the side of the bezel or back of a case.

While the soldering will not avoid my invention, yet my invention is of such a construction that it is possible to make it without the necessity of soldering and therefore secure an additional advantage from it.

Referring to the drawings:

Figure 1 is a plan view of the bezel.

Figure 2 is a side elevation of the crown side of the bezel.

Figure 3 is a section on the line 3—3 of Figure 1.

Figure 4 is an end elevation of the bezel.

Figure 5 is a section on the line 5—5 of Figure 1.

Referring to the drawings:

The bezel consists of the following parts: 1 designates a flat vertical end wall, the upper side of which terminates in a laterally disposed top wall 2, thereby giving a beveled corner to the outside of the bezel. This diagonal wall terminates in a vertically disposed inner wall 3, which extends from the top of the bezel towards the interior thereof, terminating in a laterally and inwardly disposed shoulder or rim 4.

5 designates the rear wall of the bezel, which is provided with an extended portion 6, that is semi-circular in cross section. On this rear wall this extension extends subtantially from one end of the wall to the other, terminating in diagonally disposed ends 7, which merge into the wall 5 at the corners 8.

The front wall or crown side of the bezel consists of a vertical wall 9, which is provided with two extensions 10, semi-circular in cross section and having a space 11 therebetween so as to allow the end of the crown to be nearly flush with the extended part of the bezel, thereby making a sunken crown in the case. Thus, I have a one-piece case with an extended center and a one-piece bezel.

This area 11 is cut away as at 12 for receiving the watch stem. The extended portions 10 on this space terminate adjacent the area 11 with semi-circular beveled ends 13 and tapering ends 14 at the outer ends thereof, which merge into the corners 15.

The one-piece structure includes the case, the bezel and the construction, in which an area is left to permit the location of the end of the crown to be nearly flush with the extended part of the bezel, securing the sunken crown in the case.

It will be understood that changes in design and shape are comprehended within my invention, as well as the making of it in one piece. While it is preferred to make it in one piece, and there are certain mechanical advantages therefrom, yet my invention is to be limited to such modifications as come within the scope of my claims.

Having thus fully described my invention, what I claim as new and desire to secure by Letters Patent, is:

1. In combination in a bezel of side walls, a diagonally disposed rim on top thereof, a recessed laterally disposed rim on the interior thereof, and pressed out lateral extensions from the side walls, said lateral extensions being semi-circular in cross section.

2. In combination in a bezel of side walls, a diagonally disposed rim on top thereof, a recessed laterally disposed rim on the interior thereof, pressed out lateral extensions from the side walls, said lateral extensions being semi-circular in cross section, and having ends that merge diagonally into said side walls.

3. In combination in a bezel of side walls, a diagonally disposed rim on top thereof, a recessed laterally disposed rim on the interior thereof, lateral extensions from the side walls, said lateral extensions being semi-circular in cross section, and having ends that merge diagonally into said side walls, one of said extensions extending downwardly

throughout the entire length of one side wall, while the other of said extensions extends a portion only of the length of the side wall and are separated with a space between the ends of the extensions whereby the end of a crown will be substantially flush when in position with the exterior surface of said spaced extensions.

4. In combination in a bezel of side walls, a diagonally disposed rim on top thereof, a recessed laterally disposed rim on the interior thereof, lateral extensions from the side walls, said lateral extensions being semi-circular in cross section, and having ends that merge diagonally into said side walls, one of said extensions extending downwardly throughout the entire length of one side wall, while the other of said extensions extends a portion only of the length of the side wall and are separated with a space between the ends of the extensions whereby the end of a crown will be substantially flush when in position with the exterior surface of said spaced extensions, and the ends of said spaced extensions adjacent the crown being semi-circular.

5. A case having a vertical side wall, a sloping rectangular upper wall, a recessed bezel supported by said sloping wall, and laterally projecting portions from said side wall on parts thereof, said portions projecting laterally being semi-circular in section.

In testimony whereof I affix my signature.

CARL W. BIESER.