C. G. SPRADO.

GAS ENGINE.

APPLICATION FILED OCT. 18, 1909.

961,079.

Patented June 7, 1910.

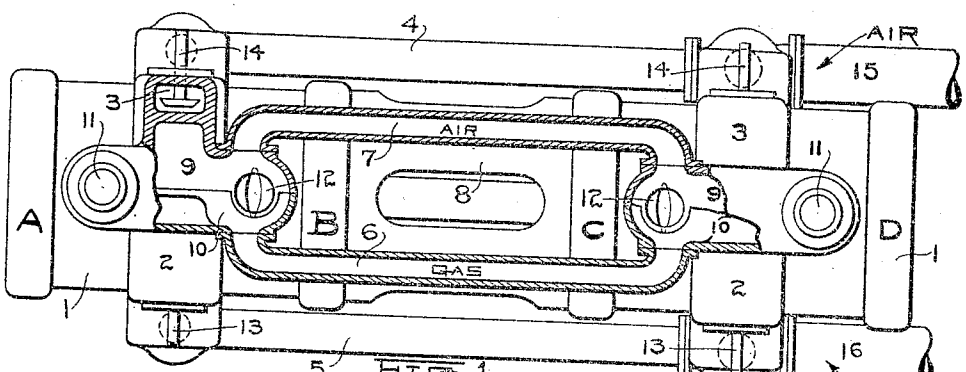

FIG. 1.

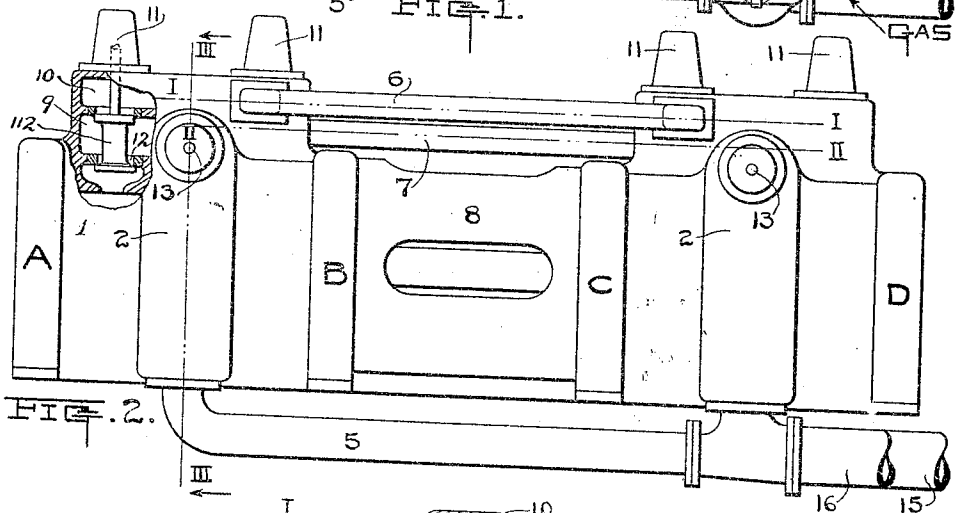

FIG. 2.

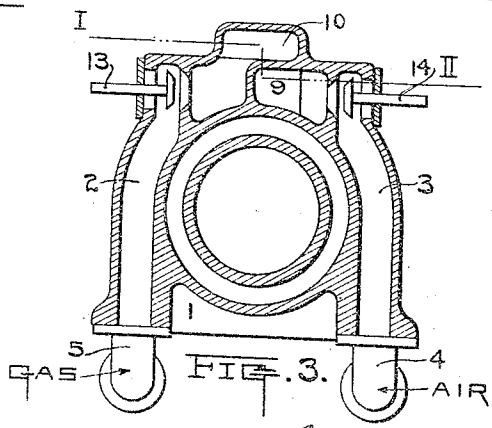

FIG. 3.

WITNESSES =

W. H. Lieber.

Ella Brickell

C. G. Sprado INVENTOR-

BY G. J. DeWein ATTORNEY.

UNITED STATES PATENT OFFICE.

CARL G. SPRADO, OF MILWAUKEE, WISCONSIN, ASSIGNOR TO ALLIS-CHALMERS COMPANY, OF MILWAUKEE, WISCONSIN, A CORPORATION OF NEW JERSEY.

GAS-ENGINE.

961,079. Specification of Letters Patent. Patented June 7, 1910.

Application filed October 18, 1909. Serial No. 523,332.

To all whom it may concern:

Be it known that I, CARL G. SPRADO, a citizen of the United States, residing at Milwaukee, in the county of Milwaukee and State of Wisconsin, have invented a certain new and useful Improvement in Gas-Engines, of which the following is a specification.

This invention relates to improvements in the construction of gas engines.

The object of the invention is to render an engine more sensitive to governing.

The invention is particularly applicable to a two cylinder double acting four cycle gas engine. The cylinders of the engine may be in tandem, or parallel to each other, or radiating from the shaft.

One of the main features of the invention is an equalizing pipe connecting the suction chamber from which each cylinder takes its supply.

A clear conception of the invention can be obtained by referring to the accompanying drawing specifically showing a tandem engine and in which like reference characters designate the same or similar parts in different views.

Figure 1 is a plan view of a pair of gas engine cylinders in tandem, having the invention applied thereto, a portion thereof being shown in section in two planes on the line I—II, Fig. 3. Fig. 2 is an elevation of the device shown in Fig. 1 a portion being in section to show a valve. Fig. 3 is a vertical section taken on the line III—III of Fig. 2 looking in the direction of the arrows.

The cylinders 1 which are separated from each other by the tie-piece 8, have air chambers 9 and gas chambers 10 formed above each of them. The gas chambers 10 are above the air chambers 9 and directly below the inlet valve mechanisms 11. These mechanisms 11 include the valves 112 which regulate the admission of gas and air into the cylinders 1 through the ports 12. Each of these valves 112 is adapted to open a passage between the chambers 10, 9, and simultaneously the corresponding port 12 between the chamber 9 and the chamber of the cylinder 1. Conduits, 2, on one side of the cylinders 1, form connections between the gas pipes 16, 5, and the gas chambers 10. The governor or hand operated throttle valves 13 in the conduits 2 control the passage of gas therethrough. Similar conduits 3 on the opposite sides of the cylinders 1, form connections between the air pipes 15, 4, and the air chambers 9, the passage of air in these conduits 3 being controlled by the throttle valves 14.

The pipe 7 on one side of the cylinders, a section of which is shown in Fig. 1, connects the air chambers 9. A similar pipe 6 on the opposite side of the cylinders 1, makes a connection between the gas chambers 10. The pipes 6, 7, are of sufficient size to at all times maintain the respective connected chambers 9, 9, 10, 10, at the same pressures. This construction will then present a pair of connected chambers for gas having two throttle valves 13, 13, and a pair of connected chambers for air also having two throttle valves 14, 14, and it is a vital consideration that the volume of the space in each of the two fluid supply reservoirs formed by these connected chambers be a minimum. This being so, will make the speed control of the engine through the governor operated throttle valves 13, 14, exceedingly sensitive.

During the operation of this type of engine, the cycle of events is such that a suction will follow a suction in one of the cylinders 1 for two successive strokes of the engine. This will then be followed by a suction following a suction in the other cylinder 1, for the next two successive strokes. The result of this sequence of events is that for each of the cylinders 1 the suction chambers 9, 10, between the throttle valves 13, 14, and the inlet valves 12, will be called upon to supply that cylinder 1 with charges for two successive strokes, while for the next two successive strokes it will not be called upon to supply charges. This would cause the pressure in these chambers 1, 10, to vary. This variation is overcome in the present invention by connecting these chambers 9, 10, by the equalizing pipes 6, 7, as above described.

The operation of this invention is therefore as follows: Supposing the cylinder end A to be supplied with a charge during its suction stroke, and end B exhausting, end C exploding, and end D compressing. The supply of gas to end A will have two paths; one a direct supply through the pipes 16, 5, conduit 2, past throttle valve 13 into chamber 10 and thence through ports 12; the other an indirect supply through pipe 16,

conduit 2 of the other cylinder 1, past throttle valve 13, chamber 10 and the equalizing pipe 6 chamber 10 and inlet ports 12. The supply of air will similarly have two paths one for direct supply and the other for indirect supply. For the succeeding stroke of the engine, end B will be under suction and will have two paths of supply one direct and the other indirect for both its gas and its air. During this stroke end A is compressing, end C is exhausting, and end D is exploding. For the third stroke of the engine, end C will be under suction and will derive its supply of gas by two paths; first directly through pipe 16, conduit 2, past throttle valve 13 chamber 10 and past ports 12, the other indirectly through pipes 16, 5, conduit 2 of the other cylinder 1, throttle valve 13 chamber 10, equalizing pipe 6, chamber 10 and inlet ports 12. The supply of air will similarly have two paths one direct and the other indirect. During this stroke, the end A is exploding, the end B is compressing, and end D is exhausting. For the fourth stroke of the engine, the end D will be under suction and will have two sources of supply one direct and the other indirect for both its gas and its air. During this stroke end A will be exhausting, end B exploding, and end C compressing. From this it follows that a suction supply of gas for any cylinder end is substantially one-half directly from the supply pipe past a throttle valve and substantially one-half from the supply indirectly through conduit 2, the throttle valve, and chamber 10 of the other cylinder 1 and thence through equalizing pipe 6. In the same way the suction supply of air for any cylinder end is substantially one-half provided through the equalizing pipe 7. The pipes 6 and 7 may therefore be of cross section sufficient only for these half supplies. These facts of half supply by the equalizing pipes 6, 7, point to the necessary conclusion and an essential feature hereinabove referred to that the volume of space in each of the two fluid supply reservoirs formed by the connected air and gas chambers 9, 9, 10, 10, is reduced to a minimum. This permits of quick response to the speed governor controlling the throttle valves 13, 13, 14, 14, because there is no large amount of fluid in these supply reservoirs.

It should be noted as a matter of information that the flow of fluids in the equalizing pipes 6, 7, is toward the cylinder A, B, during the first two strokes above described, and toward the cylinder C, D, during the third and fourth strokes.

It should be understood that it is not desired to be limited to the exact details of construction shown and described, for obvious modifications will occur to a person skilled in the art.

It is claimed and desired to secure by Letters Patent:—

1. In a gas engine, the combination of a plurality of cylinders, a supply means for conducting fluid to each of the cylinders, a throttle valve in the supply means adjacent each of the cylinders, and an equalizing pipe connecting the supply means at a point between one of said throttle valves and its adjacent cylinder and a point between another of said throttle valves and its adjacent cylinder.

2. In a gas engine, a plurality of cylinders, a supply means common to two of said cylinders, and an equalizing pipe connecting the supply means adjacent said two cylinders.

3. In a tandem gas engine, supply means for the cylinders of said engine, throttle valves in said means adjacent said cylinders, and an equalizing conduit connecting said supply means between said throttle valves and their corresponding cylinders.

4. In a gas engine, the combination of a plurality of cylinders, and a plurality of supply means for each of said cylinders, a portion of one of said supply means for one of said cylinders serving also as a portion of one of said supply means for another of said cylinders.

5. In a gas engine, the combination of a plurality of inlets to said engine, piping for supplying fluid to said inlets, and a pipe connecting said supply piping adjacent two of said inlets.

6. In a gas engine, the combination of a plurality of cylinders, a chamber formed adjacent and in communication with each of two of said cylinders, piping supplying fluid to each of said chambers, and an equalizing pipe connecting said chambers.

In testimony whereof, I affix my signature in the presence of two witnesses.

CARL G. SPRADO.

Witnesses:
H. C. Case,
G. F. DeWein.