May 12, 1953 H. J. LUEHRS 2,638,343

SHEET FEEDING AND REGISTERING MECHANISM

Filed Jan. 24, 1952 4 Sheets-Sheet 1

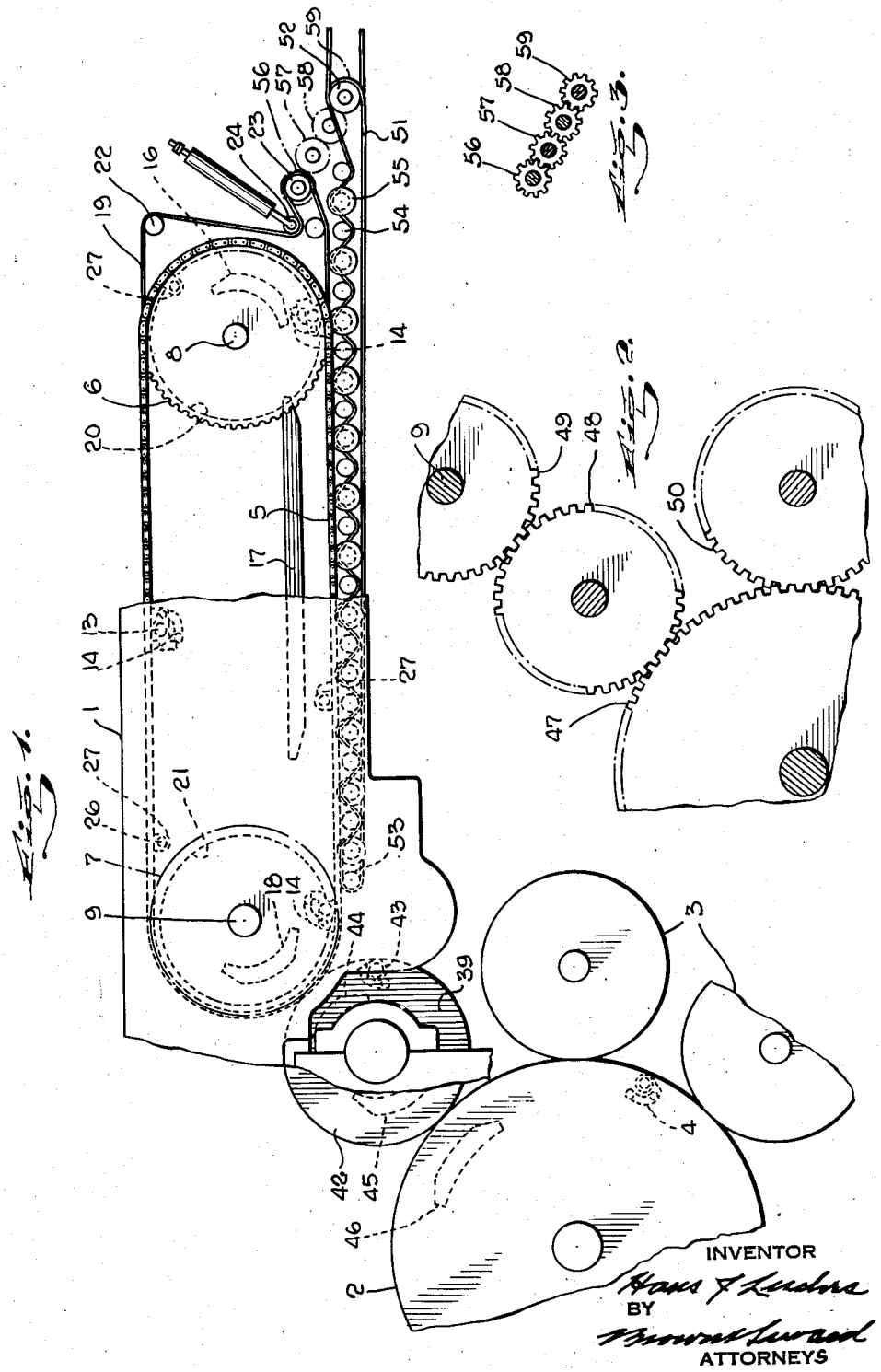

May 12, 1953 H. J. LUEHRS 2,638,343

SHEET FEEDING AND REGISTERING MECHANISM

Filed Jan. 24, 1952 4 Sheets-Sheet 2

Fig. 4.

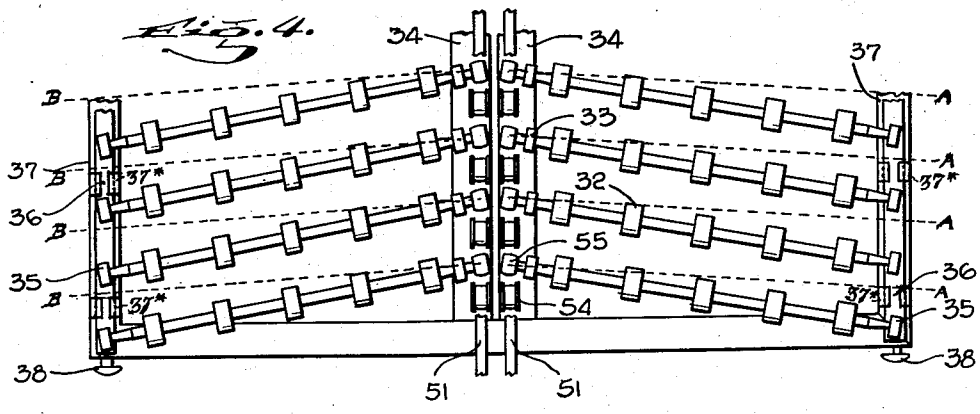

Fig. 5.

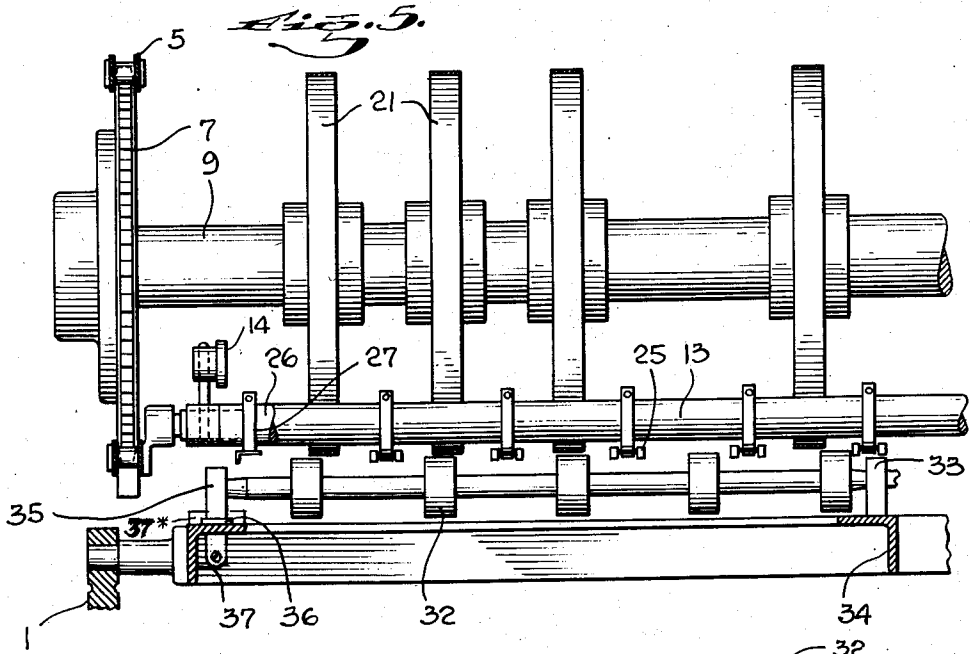

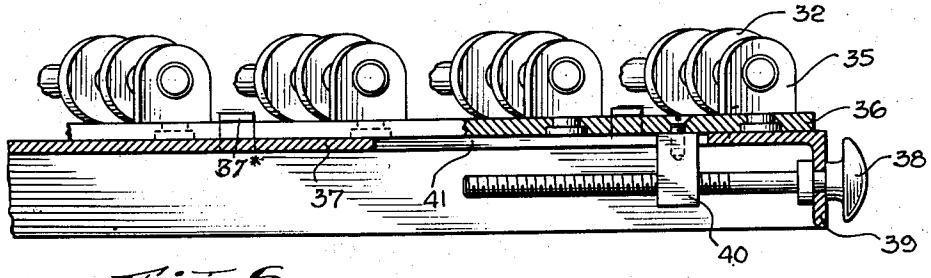

Fig. 6.

INVENTOR
Hans J. Luehrs
BY
Brown & Seward
ATTORNEYS

May 12, 1953 H. J. LUEHRS 2,638,343

SHEET FEEDING AND REGISTERING MECHANISM

Filed Jan. 24, 1952 4 Sheets-Sheet 3

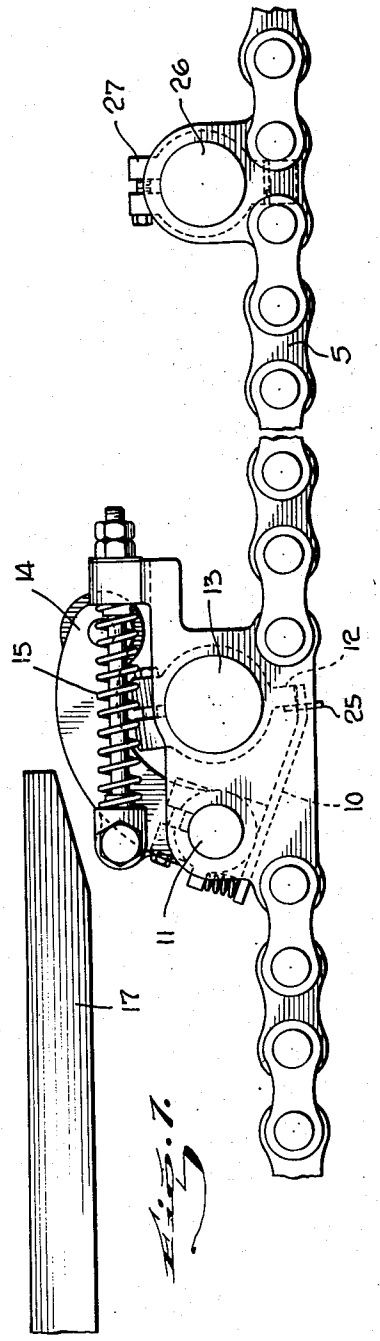

Fig. 7.

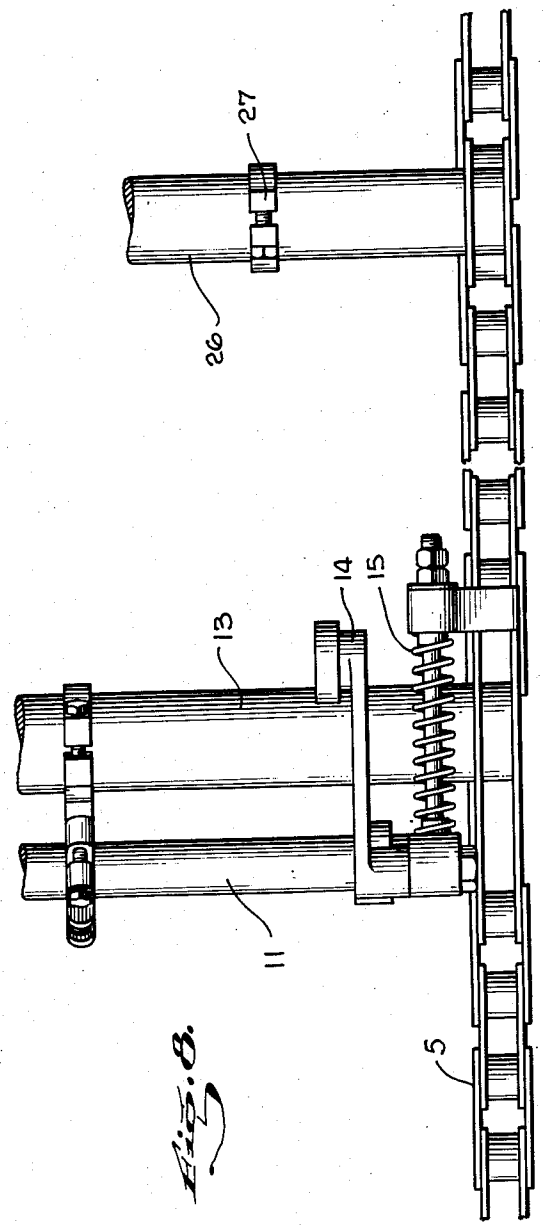

Fig. 8.

INVENTOR
Hans J. Luehrs
BY
Bonner & Seward
ATTORNEYS

May 12, 1953 H. J. LUEHRS 2,638,343

SHEET FEEDING AND REGISTERING MECHANISM

Filed Jan. 24, 1952 4 Sheets-Sheet 4

Fig. 12.

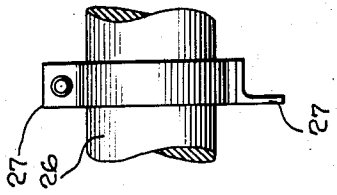

Fig. 11.

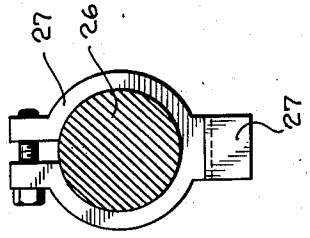

Fig. 10.

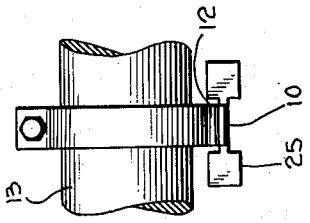

Fig. 9.

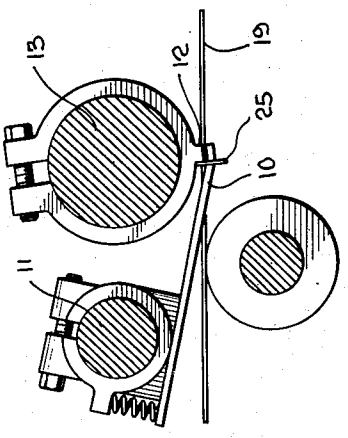

Fig. 13.

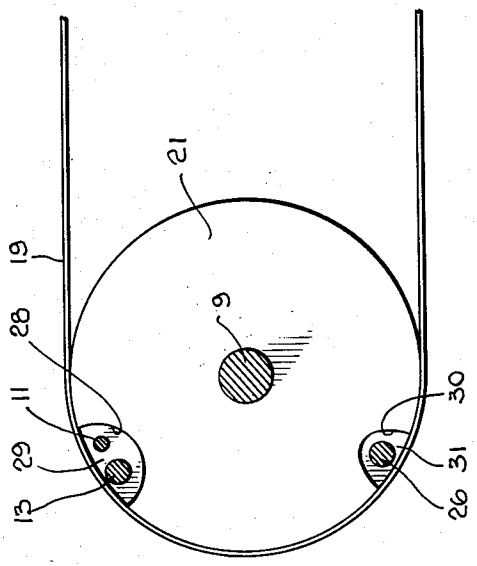

INVENTOR
Hans J. Luehrs
BY
Brown & Coward
ATTORNEYS

Patented May 12, 1953

2,638,343

UNITED STATES PATENT OFFICE

2,638,343

SHEET FEEDING AND REGISTERING MECHANISM

Hans J. Luehrs, Westerly, R. I., assignor to C. B. Cottrell & Sons Company, Westerly, R. I., a corporation of Delaware

Application January 24, 1952, Serial No. 267,960

30 Claims. (Cl. 271—48)

1

This invention relates to certain improvements in the sheet feeding and registering mechanism which forms the subject matter of my copending application filed April 4, 1951, Serial No. 219,198, in which application a sheet fed endless carrier coacts with means for temporarily releasing the sheets from the endless carrier and with means for front and side registering the temporarily released sheets before they are transferred by the endless carrier to a suitable sheet receiving element, as an impression cylinder of a rotary printing press.

This present invention includes the provision of traveling front and side sheet register stops on the endless carrier and sheet supporting and advancing means for evening the temporarily released sheets at the same time as they are advanced into register with the said front and side sheet register stops.

This invention more particularly includes side-by-side groups or rows of diverging angularly positioned sheet supporting and advancing rollers which are operable to even and register the sheets.

This invention also includes means for independently adjusting the angularity of the rollers of each group or row to accomplish the proper evening and registering of the sheets.

This invention also includes the means for positioning the side sheet register stops on the endless carrier along either side edge of the sheets to properly position the sheets laterally after they have been evened.

This invention also includes a transfer cylinder as the means for taking the evened and registered sheets from the endless carrier and transferring them to the sheet receiving element which may be an impression cylinder of a multi-color rotory sheet printing press.

This invention also includes means for driving the endless carrier at a certain surface speed and the sheet evening and registering means at a higher surface speed.

A practical embodiment of my invention is represented in the accompanying drawings, in which

Fig. 1 represents a detail view in side elevation, partly in section, of the sheet fed endless carrier and the rollers for evening the sheets and front and side registering them; the impression, plate and transfer cylinders being shown in diagram;

Fig. 2 represents a detail view of the gearing which operatively connects the impression, plate and transfer cylinders to the endless carrier;

Fig. 3 represents a detail view of the gearing

2

which drives the groups or rows of sheet evening and registering rollers from the endless carrier;

Fig. 4 represents a detail plan view of the side-by-side groups or rows of diverging, angularly positioned sheet supporting and advancing rollers;

Fig. 5 represents a detail vertical view of the sheet receiving end of the endless carrier and its adjacent elements;

Fig. 6 represents a detail side view on an enlarged scale of the sheet evening and registering rollers and the means for adjusting them angularly;

Fig. 7 represents an enlarged detail side view of one of the side chains of the endless carrier and one of its sets of head grippers, front sheet register stops and one of a pair of the side sheet register stops;

Fig. 8 represents a detail plan view of the same;

Fig. 9 represents a detail longitudinal section showing one of the head grippers and a front sheet register stop;

Fig. 10 represents a detail front view of the same;

Fig. 11 represents a longitudinal section of one of the side sheet register stops;

Fig. 12 represents a detail front view of the same; and

Fig. 13 represents a longitudinal vertical section showing one of the endless carrier belt pulleys.

The rotory printing press frame 1 may be of any desired form and construction for mounting the various elements to be hereinafter described.

The impression and plate cylinders of the printing unit are denoted by 2 and 3 respectively, the impression cylinder being provided with one or more sets of sheet grippers 4.

The sheet feeding, evening and registering mechanism is shown as comprising the following elements.

The sheet fed endless carrier is shown as comprising a pair of side chains 5 passing around front and rear pairs of sprockets 6 and 7 respectively, which sprockets are fast on front and rear cross shafts 8 and 9. This endless carrier is also provided with spaced sets of head grippers, the movable jaws 10 being mounted on crossbars 11 and the fixed jaws 12 being mounted on fixed crossbars 13.

The movable jaws 10 of the head grippers are provided with levers 14. The usual springs 15 are provided for yieldingly holding the gripper jaws 10 closed.

A fixed cam 16 is located at the front or sheet

receiving end of the endless carrier for opening the gripper jaws 10 to receive the sheets fed thereto at the desired surface speed by any suitable means.

A second fixed cam 17 is located between the front and rear ends of the endless carrier in position to engage the gripper levers 14 to partially open the grippers for temporarily releasing the sheets to permit them to be evened and registered as will hereinafter appear.

A third fixed cam 18 is located at the rear or sheet transfer end of the endless carrier in position to engage the gripper lever 14 for opening the grippers to release the sheets therefrom.

The endless carrier is also provided, between the side chains 5, with endless belts 19 which pass around pulleys 21 on the rear cross shaft 9 and in contact with the tops and bottoms of the pulleys 20 on the front cross shaft 8. These belts 19 also pass around the rollers 22 and 23 and the belt tightener pulleys 24 located in front of the endless carrier.

Front register stops 25 are mounted on the fixed cross-bars 13 of the endless carrier, which stops project below the grippers 10, 12, on opposite sides thereof.

The endless carrier chains 5 are provided with spaced cross-bars 26. Sheet side register stops 27 are carried by the cross-bars at each end thereof, which stops are adjustable along the cross-bars to bring the stops at one end of the cross-bars into position to side register the sheets and the sheet register stops at the other end of the cross-bars out of position to side register the sheets.

The belt pulleys 20 and 21 of the endless carrier are shown as having peripheral recesses 28 for permitting the passing of the cross-bars 11 and 13. These cross-bars are provided with filler pieces 29 for said recesses 28 to properly support the belts 19 when passing over said recesses.

These belt pulleys 20 and 21 are also shown as having peripheral recesses 30 for permitting the side register cross-bars 26 to pass. These cross-bars 26 are provided with suitable filler pieces 31 for supporting the belts as they pass over said recesses 30.

The sheet supporting and advancing means for evening and front and side registering the temporarily released sheets is shown as comprising the following elements:

Two longitudinally disposed groups or rows of diverging, angularly positioned, rollers 32 are located beneath the endless carrier, the adjacent inner ends of the said rollers being rotatably mounted in bearings 33 pivoted along the inner adjacent roller frame bars 34. The outer ends of the said rollers 32 are rotatably mounted in bearings 35 which are pivoted along the bars 36 slidably mounted on the outer longitudinal roller frame bars 37 by gibs 37*.

The means which I have shown for independently adjusting the slide bars 36 to change the angular positions of the rollers 32 includes the following elements:

Manually turnable screws 38 are provided for adjusting the slide bars 36, the plain shanks of which screws are rotatably mounted against endwise movement in a depending flange 39 of the roller frame. The threaded portions of the said screws 38 pass through threaded hangers 40 which depend from said slide bars 36. These hangers 40 are guided along elongated slots 41 in said outer roller frame bars 37.

The means I have shown for transferring the evened and registered sheets from the endless carrier to the impression cylinder 2 or other sheet receiving element, is shown as including the following elements:

A transfer cylinder 42 is provided with one or more sets of grippers 43. A fixed cam 44 serves to open these grippers to receive the evened and registered sheets from the endless carrier grippers 10, 12. Fixed cams 45 and 46 serve to open the transfer cylinder grippers 43 and the coacting set of impression cylinder grippers 4 to transfer the sheets from the transfer cylinder to the said impression cylinder.

The endless carrier is shown as driven at a certain surface speed from the impression cylinder 2 through the train of gears 47, 48, 49. The plate cylinders 3 are provided with gears 50 which are driven from the impression cylinder gear 47.

The horizontally disposed groups or rows of evening and registering rollers 32 are rotated at a surface speed higher than that of the endless carrier, as follows:

Each of the two adjacent narrow endless belts 54 passes around the front and rear rolls 52, 53, and under and over the pulleys 54 and 55 respectively, the pulleys 54 being mounted on the roller frame and the pulleys 55 being fast on the inner adjacent ends of the rollers 32, said pulleys 55 being of slightly lesser diameter than the rollers 32. The endless carrier belt roll 23 is shown as driving the front roll 52 through a train of gears 56, 57, 58, 59.

In operation, it will be understood that when the sheets are to be registered by contact with the sheet stops 27 which have been adjusted to their proper positions; the left or near side of the group of rollers 32 may be located in the angular position shown in Fig. 4, for instance, and the right or far group of rollers may be adjusted to the angular position shown by the dotted lines A; the side register stops at the far side being moved out of the sheet line.

When it is desired to print on both sides of the sheets, twice through, the left or far group of rollers are returned to their position shown in full lines in Fig. 4, and the right or near group of rollers are moved to the position shown by the dotted lines B. The side register stops at the far side are moved inwardly to their proper positions and the side register stops at the near side are moved outwardly along their cross-bars beyond the sheet line.

It will be understood that various changes may be resorted to in the form, construction and arrangement of the several parts without departing from the spirit and scope of this invention and hence it is not intended to be limited to the particular embodiment shown and described herein.

What I claim is:

1. In a sheet feeding and registering mechanism, a sheet receiving element, a sheet fed endless carrier provided with grippers operable to take and forward the sheets, means for temporarily releasing the sheets from the said grippers, front and side sheet register stops carried by the endless carrier, sheet supporting and advancing means for evening the temporarily released sheets and cooperating with said register stops for front and side registering the sheets, and means for transferring the evened and registered sheets from the endless carrier grippers to said sheet receiving element.

2. In a sheet feeding and registering mechanism, a sheet receiving element, a sheet fed end-

less carrier travelling at a certain surface speed and provided with grippers operable to take and forward the sheets, means for temporarily releasing the sheets from said endless carrier grippers, front and side sheet register stops carried by the endless carrier, sheet supporting and advancing means travelling at a higher surface speed for evening the temporarily released sheets and cooperating with said register stops for front and side registering the sheets, and means for transferring the evened and registered sheets from the endless carrier grippers to said sheet receiving element.

3. In a sheet feeding and registering mechanism, a sheet receiving element, a sheet fed endless carrier provided with grippers operable to take and forward the sheets, means for temporarily releasing the sheets from said endless carrier grippers, front and side sheet register stops, sheet supporting and advancing means for evening the temporarily released sheets and cooperating with said register stops for front and side registering the sheets, and a rotary transfer cylinder for transferring the evened and registered sheets from the endless carrier grippers to said sheet receiving element.

4. In a sheet feeding and registering mechanism, a sheet receiving element, a sheet fed endless carrier travelling at a certain surface speed and provided with grippers operable to take and forward the sheets, means for temporarily releasing the sheets from said endless carrier grippers, front and side sheet register stops, sheet supporting and advancing means travelling at a higher surface speed for evening the temporarily released sheets and cooperating with said register stops for front and side registering the sheets, and a rotary transfer cylinder for transferring the evened and registered sheets from the endless carrier grippers to said sheet receiving element.

5. In a sheet feeding and registering mechanism for rotary printing presses, an impression cylinder, a sheet fed endless carrier provided with grippers operable to take and forward the sheets, means for temporarily releasing the sheets from the endless carrier grippers, front and side sheet register stops, sheet supporting and advancing means for evening the temporarily released sheets and cooperating with said register stops for front and side registering the sheets, and a rotary transfer cylinder for transferring the evened and registered sheets from the endless carrier grippers to said impression cylinder.

6. In a sheet feeding and registering mechanism for rotary printing presses, an impression cylinder, a sheet fed endless carrier travelling at a certain surface speed and provided with grippers operable to take and forward the sheets, means for temporarily releasing sheets from the endless carrier front and side sheet register stops, sheet supporting and advancing means travelling at a higher surface speed for evening the temporarily released sheets and cooperating with the said register stops for front and side registering the sheets, and a rotary transfer cylinder for transferring the evened and registered sheets from the endless carrier grippers to said impression cylinder.

7. In a sheet feeding and registering mechanism, a sheet receiving element, a sheet fed endless carrier provided with sheet grippers operable to take and forward the sheets and with front and side sheet register stops, means for temporarily releasing the sheets from the endless carrier grippers, sheet supporting and advancing means for evening the temporarily released sheets and front and side registering them against said register stops, and means for transferring the evened and registered sheets from the endless carrier grippers to said sheet receiving element.

8. In a sheet feeding and registering mechanism, a sheet receiving element, a sheet fed endless carrier travelling at a certain surface speed and provided with sheet grippers operable to take and forward the sheets and with front and side sheet register stops, means for temporarily releasing the sheets from the endless carrier grippers, sheet supporting and advancing means travelling at a higher surface speed for evening the temporarily released sheets and front and side registering them against said register stops, and means for transferring the evened and registered sheets from the endless carrier grippers to said sheet receiving element.

9. In a sheet feeding and registering mechanism for rotary printing presses, an impression cylinder, a sheet fed endless carrier provided with sheet grippers operable to take and forward the sheets and with front and side sheet register stops, means for temporarily releasing the sheets from the endless carrier grippers, sheet supporting and advancing means for evening the temporarily released sheets and front and side registering them against said register stops, and a rotary transfer cylinder for transferring the evened and registered sheets from the endless carrier grippers to said impression cylinder.

10. In a sheet feeding and registering mechanism for rotary printing presses, an impression cylinder, a sheet fed endless carrier travelling at a certain surface speed and provided with sheet grippers operable to take and forward the sheets and with front and side sheet register stops, means for temporarily releasing these sheets from the endless carrier grippers, sheet supporting and advancing means travelling at a higher surface speed for evening the temporarily released sheets and front and side registering them against said register stops, and a rotary transfer cylinder for transferring the evened and registered sheets from the endless carrier grippers to said impression cylinder.

11. In a sheet feeding and registering mechanism, a sheet receiving element, a sheet fed endless carrier provided with grippers operable to take and forward the sheets, means for temporarily releasing the sheets from said endless carrier grippers, front and side sheet register stops, side by side groups of diverging angularly positioned sheet supporting and advancing rollers for evening the temporarily released sheets and for front and side registering them against said register stops, and means for transferring the evened and registered sheets from the endless carrier grippers to the said sheet receiving element.

12. In a sheet feeding and registering mechanism, a sheet receiving element, a sheet fed endless carrier travelling at a certain surface speed and provided with grippers operable to take and forward the sheets, means for temporarily releasing the sheets from said endless carrier grippers, front and side sheet register stops, side by side groups of diverging angularly positioned sheet supporting and advancing rollers rotating at a higher surface speed for evening the temporarily released sheets and front and side registering them against said register stops, and means for transferring the evened and registered

sheets from the endless carrier grippers to said sheet receiving element.

13. In a sheet feeding and registering mechanism for rotary printing presses, an impression cylinder, a sheet fed endless carrier provided with grippers operable to take and forward the sheets, means for temporarily releasing the sheets from the carrier grippers, front and side sheet register stops, side by side groups of diverging angularly positioned sheet supporting and advancing rollers for evening the temporarily released sheets and for front and side registering them against said register stops, and a rotary transfer cylinder for transferring the evened and registered sheets from the endless carrier to said impression cylinder.

14. In a sheet feeding and registering mechanism for rotary printing presses, an impression cylinder, a sheet fed endless carrier travelling at a certain surface speed and provided with grippers operable to take and forward the sheets, means for temporarily releasing the sheets from the endless carrier grippers, front and side sheet register stops, side by side groups of diverging angularly positioned sheet supporting and advancing rollers rotating at a higher surface speed for evening the temporarily released sheets and for front and side registering them against said register stops, and a rotary transfer cylinder for transferring the evened and registered sheets from the endless carrier to said impression cylinder.

15. In a sheet feeding and registering mechanism, a sheet receiving element, a sheet fed endless carrier provided with sheet grippers operable to take and forward the sheets and with front and side sheet register stops, means for temporarily releasing the sheets from the endless carrier grippers, side by side groups of diverging angularly positioned sheet supporting and advancing rollers for evening the temporarily released sheets and for front and side registering them against said register stops, and means for transferring the evened and registered sheets from the endless carrier grippers to said sheet receiving element.

16. In a sheet feeding and registering mechanism, a sheet receiving element, a sheet fed endless carrier travelling at a certain surface speed and provided with sheet grippers operable to take and forward the sheets and with front and side register stops, means for temporarily releasing the sheets from the endless carrier grippers, side by side groups of diverging angularly positioned sheet supporting and advancing rollers rotating at a higher surface speed for evening the temporarily released sheets and for front and side registering them against said register stops, and means for transferring the evened and registered sheets from the endless carrier grippers to said sheet receiving element.

17. In a sheet feeding and registering mechanism for rotary printing presses, an impression cylinder, a sheet fed endless carrier provided with sheet grippers operable to take and forward the sheets and with front and side sheet register stops, means for temporarily releasing the sheets from the endless carrier grippers, side by side groups of diverging angularly positioned sheet supporting and advancing rollers for evening the temporarily released sheets and for front and side registering them against said register stops, and a rotary transfer cylinder for transferring the evened and registered sheets from the endless carrier grippers to said impression cylinder.

18. In a sheet feeding and registering mechanism for rotary printing presses, an impression cylinder, a sheet fed endless carrier travelling at a certain surface speed and provided with sheet grippers operable to take and forward the sheets and with front and side sheet register stops, means for temporarily releasing the sheets from the endless carrier grippers, side by side groups of diverging angularly positioned sheet supporting and advancing rollers rotating at a higher surface speed for evening the temporarily released sheets and for front and side registering them against said register stops, and a rotary transfer cylinder for transferring the evened and registered sheets from the endless carrier grippers to said impression cylinder.

19. In a sheet feeding and registering mechanism, a sheet receiving element, a sheet fed endless carrier provided with grippers operable to take and forward the sheets, means for temporarily releasing the sheets from the endless carrier grippers, front and side sheet register stops, side by side groups of diverging angularly positioned sheet supporting and advancing rollers for evening the temporarily released sheets and front and side registering them against said register stops, means for transferring the evened and registered sheets from the endless carrier grippers to said sheet receiving element, and means for adjusting the angularity of the rollers of each group.

20. In a sheet feeding and registering mechanism for rotary printing presses, an impression cylinder, a sheet fed endless carrier provided with grippers operable to take and forward the sheets, means for temporarily releasing the sheets from said grippers, front and side sheet register stops, side by side groups of diverging angularly positioned sheet supporting and advancing rollers for evening the temporarily released sheets and front and side registering them against said register stops, a rotary transfer cylinder for transferring the evened and registered sheets from the endless carrier to said impression cylinder, and means for adjusting the angularity of the rollers of each group.

21. In a sheet feeding and registering mechanism, a sheet feeding element, a sheet fed endless carrier provided with grippers operable to take and forward the sheets, means for temporarily releasing the sheets from the endless carrier grippers, front and side sheet register stops, and sheet supporting and advancing means for evening the temporarily released sheets and front and side registering them against said register stops, said last named means comprising a suitable frame and side by side groups of diverging angularly positioned rollers, means for permanently pivoting the ends of the rollers along one side of each group to the frame, and means for independently adjusting the other end of the rollers of each group.

22. In a sheet feeding and registering mechanism, a sheet feeding element, a sheet fed endless carrier provided with grippers operable to take and forward the sheets, means for temporarily releasing the sheets from the endless carrier grippers, front and side sheet register stops, and sheet supporting and advancing means for evening the temporarily released sheets and front and side registering them against said register stops, said last named means comprising a suitable frame, bars slidable thereon, side by side groups of diverging angularly positioned rollers, having their ends along one side of each group rotatably mounted in bearings pivoted along the

frame and their other ends rotatably mounted in bearings pivoted along their respective slide bars, and hand screws for independently moving the slide bars to adjust the angularity of the rollers of each group.

23. In a sheet feeding and registering mechanism, a sheet feeding element, a sheet fed endless carrier provided with grippers operable to take and forward the sheets, means for temporarily releasing the sheets from the endless carrier grippers, front and side sheet register stops, and sheet supporting and advancing means for evening the temporarily released sheets and front and side registering them against said register stops, said last named means comprising a suitable frame, side bars slidable thereon, and side by side groups of diverging angularly positioned rollers having their inner ends rotatably mounted in bearings pivoted along the frame and their outer ends rotatably mounted in bearings pivoted along their respective side bars, and means for independently sliding the side bars to adjust the angularity of the rollers of each group.

24. In a sheet feeding and registering mechanism, a sheet feeding element, a sheet fed endless carrier provided with sheet grippers operable to take and forward the sheets and head and side register stops, means for temporarily releasing the sheets from the endless carrier grippers, and sheet supporting and advancing means for evening the temporarily released sheets and front and side registering them against said register stops, said last named means comprising a suitable frame, side bars slidable thereon, and side by side groups of diverging angularly positioned rollers having their inner ends rotatably mounted in bearings pivoted along the frame and their outer ends rotatably mounted in bearings pivoted along their respective side bars, and means for independently sliding the side bars to adjust the angularity of the rollers of each group.

25. In a sheet feeding and registering mechanism, a sheet feeding element, a sheet fed endless carrier provided with grippers operable to take and forward the sheets, means for temporarily releasing the sheets from the endless carrier grippers, front and side sheet register stops, and sheet supporting and advancing means for evening the temporarily released sheets and front and side registering them against said register stops, said last named means comprising a suitable frame, side bars slidable thereon, and side by side groups of diverging angularly positioned rollers having their inner ends rotatably mounted in bearings pivoted along the frame and their outer ends rotatably mounted in bearings pivoted along their respective side bars, and hand screws for independently sliding the side bars to adjust the angularity of the rollers of each group.

26. In a sheet feeding and registering mechanism, a sheet feeding element, a sheet fed endless carrier provided with sheet grippers operable to take and forward the sheets and head and side register stops, means for temporarily releasing the sheets from the endless carrier grippers, and sheet supporting and advancing means for evening the temporarily released sheets and front and side registering them against said stops, said last named means comprising a suitable frame, side bars slidable thereon, and side by side groups of diverging angularly positioned rollers having their inner ends rotatably mounted in bearings pivoted along the frame and their outer ends rotatably mounted in bearings pivoted along their respective side bars, and hand screws for independently sliding the side bars to adjust the angularity of the rollers of each group.

27. In a sheet feeding and registering mechanism, a sheet receiving element, a sheet fed endless carrier including side chains and intermediate belts, cross bars connecting the side chains, sheet grippers, front register stops and side register stops carried by their respective cross bars said sheet grippers being operable to take and forward the sheets, means for temporarily releasing the sheets from their endless carrier grippers, means for evening the temporarily released sheets and registering them against said front and side stops, and means for transferring the evened and registered sheets to said sheet receiving element.

28. In a sheet feeding and registering mechanism, a sheet receiving element, a sheet fed endless carrier travelling at a certain surface speed and including side chains and intermediate belts, cross bars connecting the side chains, sheet grippers, front register stops and side register stops carried by their respective cross bars, said sheet grippers being operable to take and forward the sheets, means for temporarily releasing the sheets from their endless carrier grippers, means travelling at a higher surface speed for evening the temporarily released sheets and registering them against said front and side stops, and means for transferring the evened and registered sheets to said sheet receiving element.

29. In a sheet feeding and registering mechanism, a sheet receiving element, a sheet fed endless carrier including side chains and intermediate belts, cross bars connecting the side chains, sheet grippers, front register stops and side register stops carried by their respective cross bars, said sheet grippers being operable to take and forward the sheets, means for temporarily releasing the sheets from their endless carrier grippers, sheet supporting and advancing angularly positioned rollers for evening the temporarily released sheets and registering them against said front and side stops, and means for transferring the evened and registered sheets to said sheet receiving element.

30. In a sheet feeding and registering mechanism, a sheet receiving element, a sheet fed endless carrier travelling at a certain surface speed and including side chains and intermediate belts, cross bars connecting the side chains, sheet grippers, front register stops and side register stops carried by their respective cross bars, said sheet grippers being operable to take and forward the sheets, means for temporarily releasing the sheets from their endless carrier grippers, sheet supporting and advancing angularly positioned rollers rotating at a higher speed for evening the temporarily released sheets and registering them against said front and side stops, and means for transferring the evened and registered sheets to said sheet receiving element.

HANS J. LUEHRS.

No references cited.