US011114833B2

(12) **United States Patent**
Kamei et al.

(10) **Patent No.: US 11,114,833 B2**
(45) **Date of Patent: Sep. 7, 2021**

(54) **WIRE EXTERIOR BODY AND EXTERIOR-COVERED WIRE HARNESS**

(71) Applicants: **FURUKAWA ELECTRIC CO., LTD.**, Tokyo (JP); **FURUKAWA AUTOMOTIVE SYSTEMS INC.**, Shiga (JP)

(72) Inventors: **Yoshikazu Kamei**, Tokyo (JP); **Takashi Oshino**, Tokyo (JP); **Hideyuki Ikeda**, Tokyo (JP); **Naoyuki Kojima**, Tokyo (JP); **Koichi Maeno**, Tokyo (JP)

(73) Assignees: **FURUKAWA ELECTRIC CO., LTD.**, Tokyo (JP); **FURUKAWA AUTOMOTIVE SYSTEMS INC.**, Inukami-Gun (JP)

(*) Notice: Subject to any disclaimer, the term of this patent is extended or adjusted under 35 U.S.C. 154(b) by 0 days.

(21) Appl. No.: **16/958,567**

(22) PCT Filed: **Dec. 27, 2018**

(86) PCT No.: **PCT/JP2018/048070**
§ 371 (c)(1),
(2) Date: **Jun. 26, 2020**

(87) PCT Pub. No.: **WO2019/131848**
PCT Pub. Date: **Jul. 4, 2019**

(65) **Prior Publication Data**

US 2020/0343708 A1 Oct. 29, 2020

(30) **Foreign Application Priority Data**

Dec. 28, 2017 (JP) JP2017-254624
Dec. 28, 2017 (JP) JP2017-254625

(51) **Int. Cl.**
H02G 3/30 (2006.01)
H01B 7/40 (2006.01)
(Continued)

(52) **U.S. Cl.**
CPC ***H02G 3/30*** (2013.01); ***B60R 16/0215*** (2013.01); ***H01B 7/0045*** (2013.01);
(Continued)

(58) **Field of Classification Search**
CPC ... H02G 3/30; H02G 3/04; H01B 7/00; H01B 7/18; B60R 16/02
(Continued)

(56) **References Cited**

U.S. PATENT DOCUMENTS

5,806,812 A * 9/1998 Jacobs B60R 16/0215 248/73
2003/0213607 A1* 11/2003 Katsumata E05D 5/062 174/68.3
(Continued)

FOREIGN PATENT DOCUMENTS

CN 105359362 A 2/2016
CN 205070342 U 3/2016
(Continued)

OTHER PUBLICATIONS

International Preliminary Report on Patentability, dated Jul. 9, 2020, and English translation of the Written Opinion of the International Searching Authority, dated Mar. 26, 2019, (Forms PCT/IB/338, PCT/IB/373, and PCT/ISA/237) for International Application No. PCT/JP2018/048070.
(Continued)

Primary Examiner — Timothy J Thompson
Assistant Examiner — Michael F McAllister
(74) *Attorney, Agent, or Firm* — Birch, Stewart, Kolasch & Birch, LLP

(57) **ABSTRACT**

A wire exterior body and an exterior-covered wire harness in which damage by an attaching member is prevented are provided. A wire exterior body (**3**) to be mounted on the outer periphery of an electric wire (wire harness) (**2**), the
(Continued)

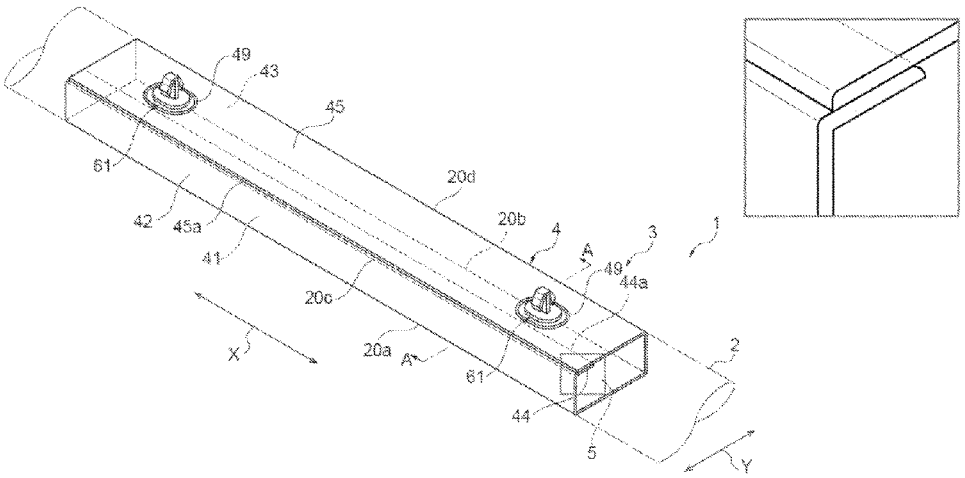

wire exterior body being formed of a resin sheet that is bent, includes a plurality of wall parts (**4**) extending along an extending direction of the electric wire and forming an accommodating part (**5**) that accommodates the electric wire. Among the plurality of the wall parts (**4**), at least one wall part (upper lid wall part (**45**)) has a through-hole (**47**), penetrating in a thickness direction of the resin sheet, into which an attaching member (**61**) attachable to a vehicle body is inserted, and a groove (a lower surface groove (**48**) or an upper surface groove (**49**)) in which a thickness of the resin sheet is reduced is formed on a part around the through-hole (**47**) on at least one surface of an upper surface (**45***c*) and a lower surface (**45***d*) facing the thickness direction.

21 Claims, 11 Drawing Sheets

(51) **Int. Cl.**

B60R 16/02	(2006.01)
H01B 7/00	(2006.01)
H01B 7/18	(2006.01)
H02G 3/04	(2006.01)

(52) **U.S. Cl.**
CPC ***H01B 7/1805*** (2013.01); ***H01B 7/40*** (2013.01); ***H02G 3/0406*** (2013.01)

(58) **Field of Classification Search**
USPC 174/480
See application file for complete search history.

(56) **References Cited**

U.S. PATENT DOCUMENTS

2005/0217888	A1*	10/2005	Arai	H02G 3/0418 174/72 A
2016/0156165	A1	6/2016	Katou et al.	
2016/0329770	A1	11/2016	Ishii et al.	
2017/0129424	A1	5/2017	Nagahashi et al.	

FOREIGN PATENT DOCUMENTS

CN	106062890	A	10/2016
CN	106575860	A	4/2017
CN	206697872	U	12/2017
JP	64-81610	A	3/1989
JP	9-46851	A	2/1997
JP	2006-246663	A	9/2006
JP	2011-223650	A	11/2011
JP	2015-47057	A	3/2015
JP	2015-126668	A	7/2015
JP	2015-231248	A	12/2015
JP	2017-28903	A	2/2017
JP	2017-55510	A	3/2017

OTHER PUBLICATIONS

International Search Report for PCT/JP2018/048070 dated Mar. 26, 2019.
Written Opinion of the International Searching Authority for PCT/JP2018/048070 (PCT/ISA/237) dated Mar. 26, 2019.
Chinese Office Action and Search Report for Chinese Application No. 201880084243.4, dated Feb. 2, 2021, with English translation.

* cited by examiner

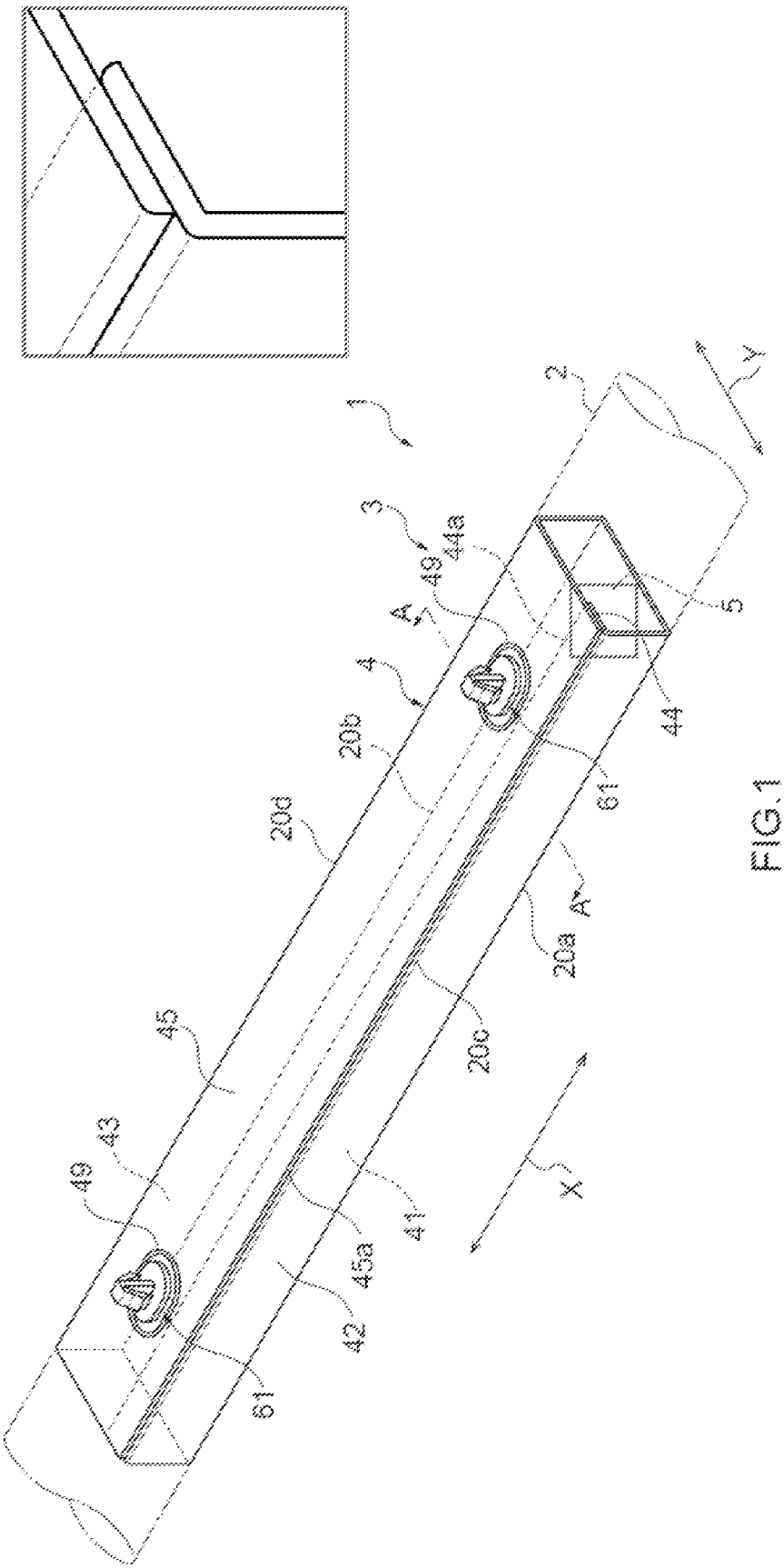

FIG.1

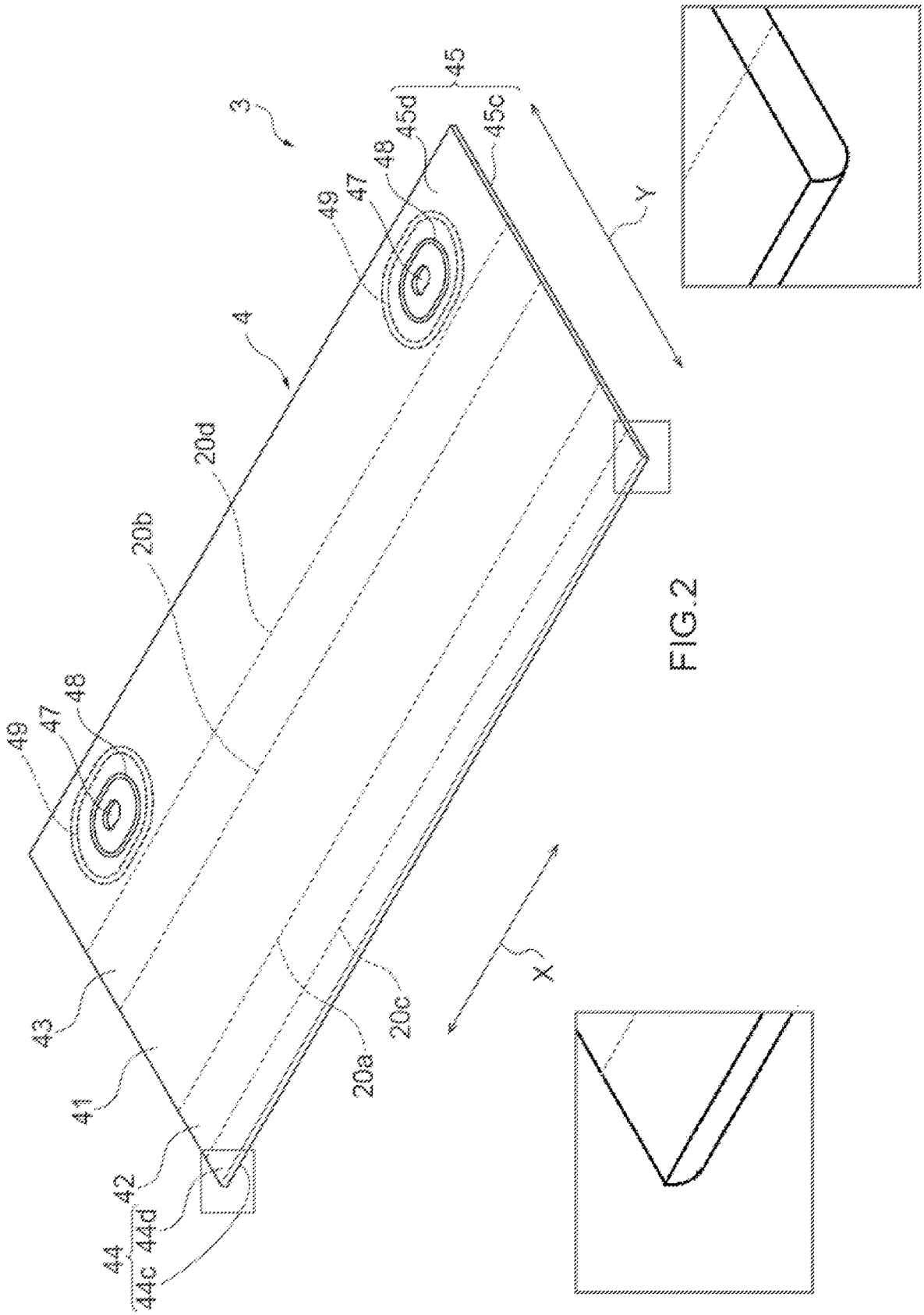

FIG.2

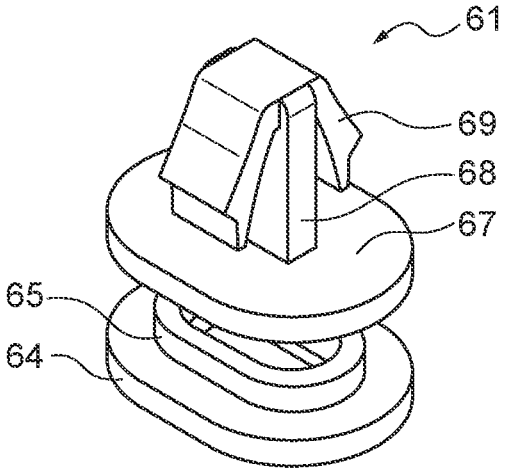

FIG.3A

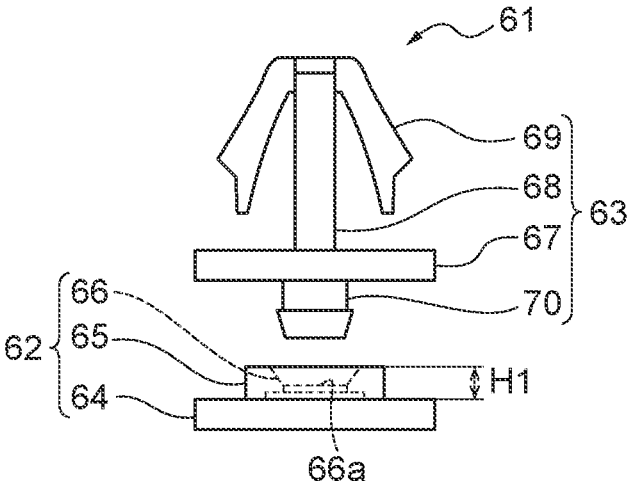

FIG.3B

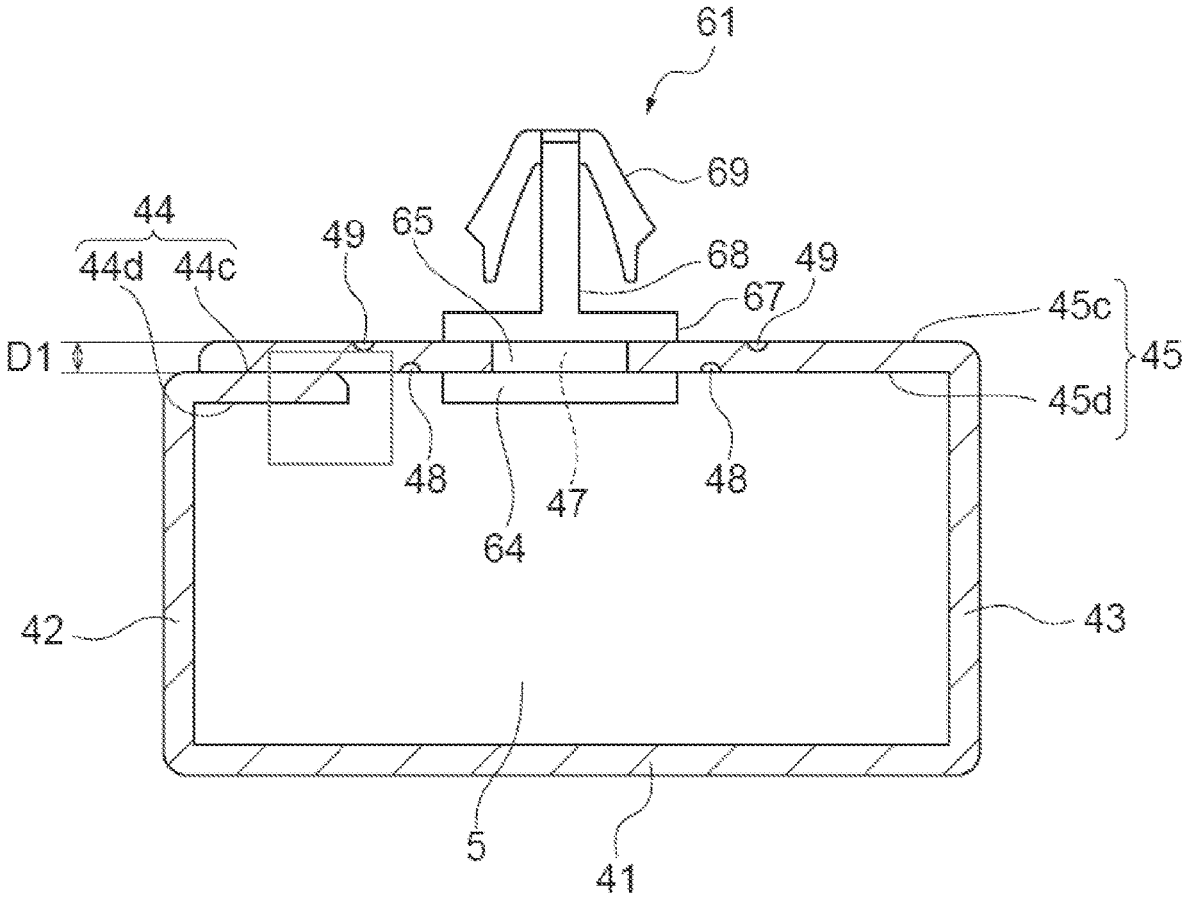

FIG.4

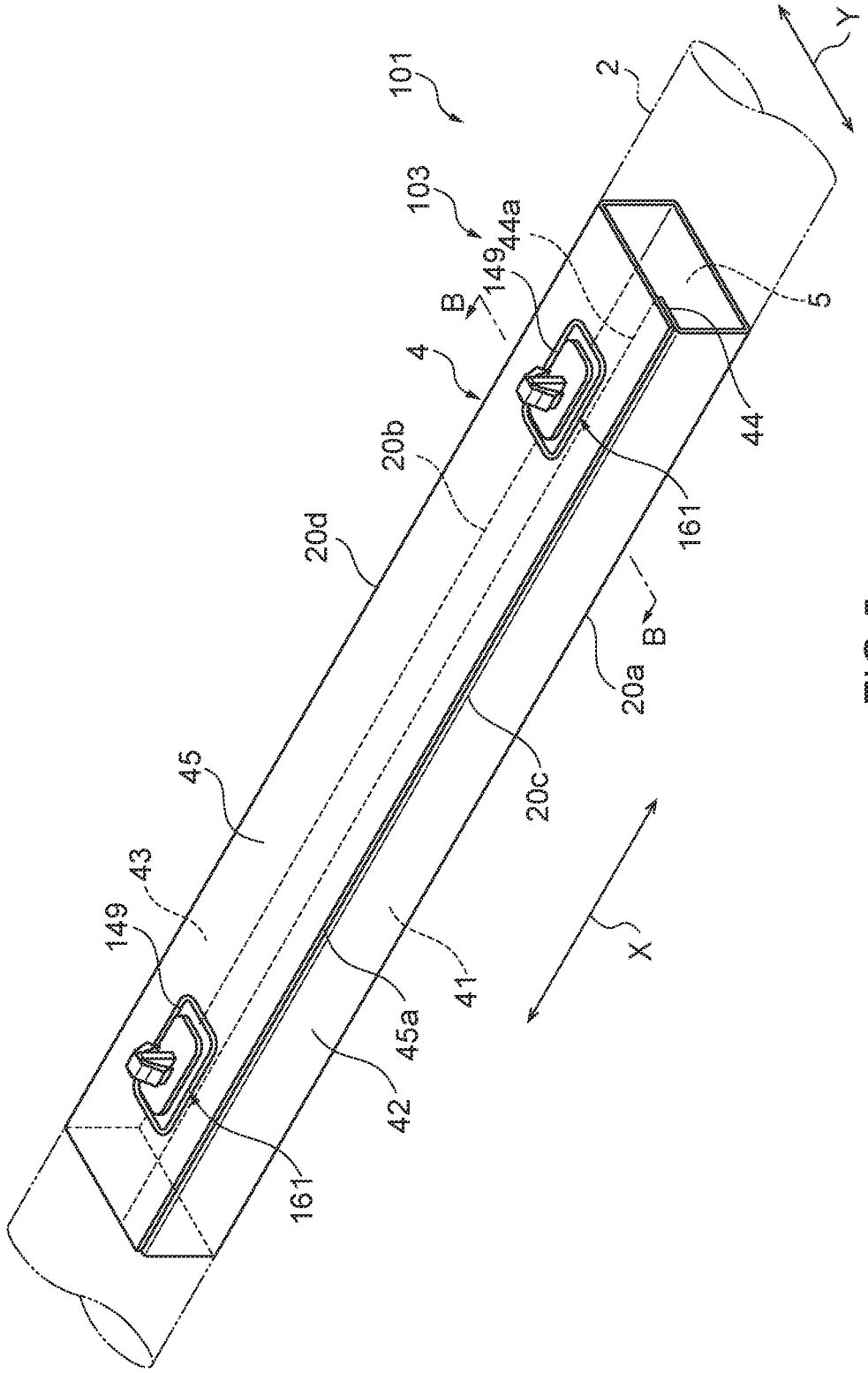
101
103
2
Y
44a
149
B
5
4
44
20b
161
20d
B
20a
45
20c
43
149
X
41
45a
42
161

FIG.5

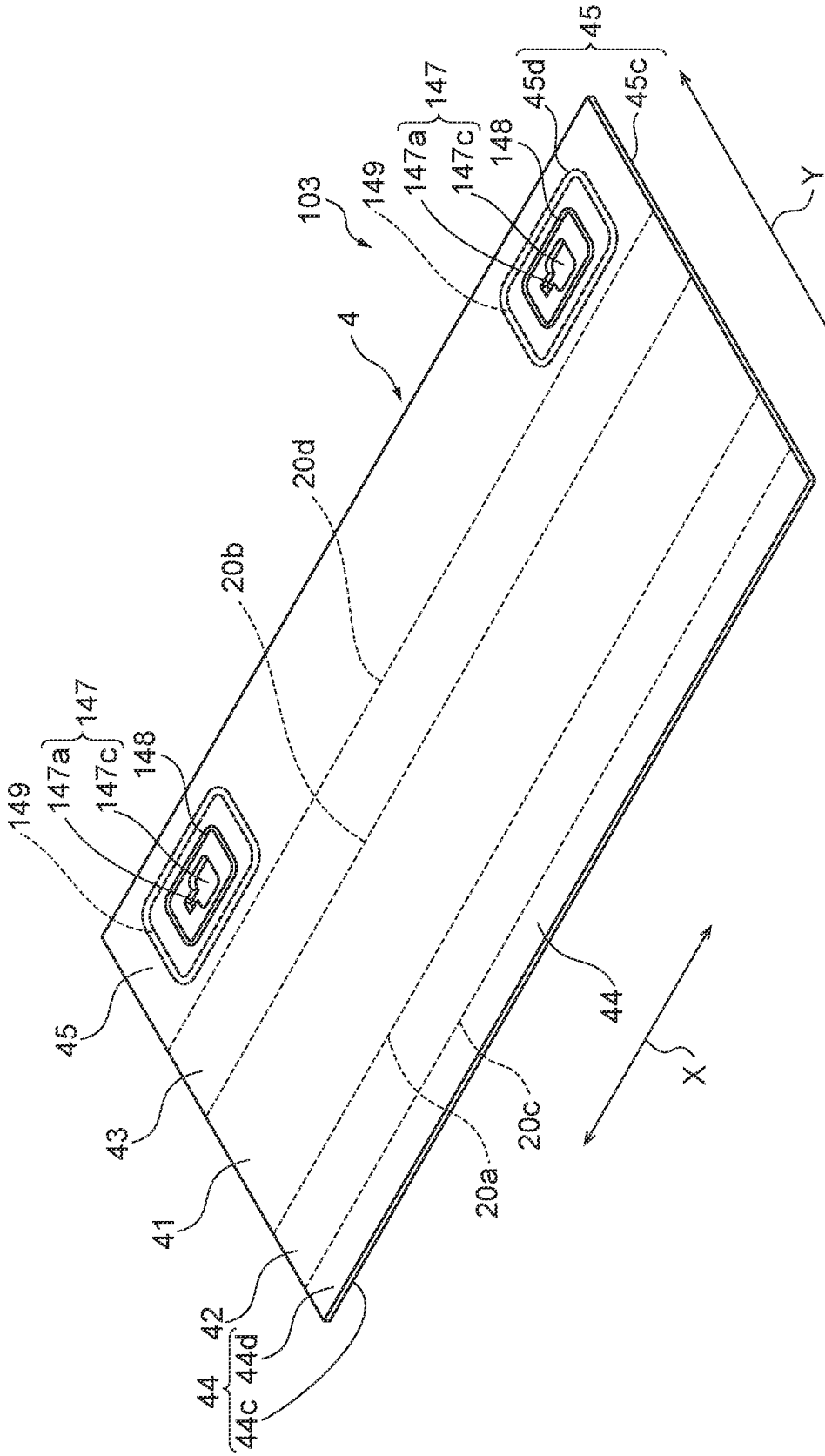
45
45d
45c
147
147a
147c
148
149
103
4
20d
20b
147
147a
147c
148
149
45
43
41
42
44
44d
44c
20a
20c
44
X
Y

FIG.6

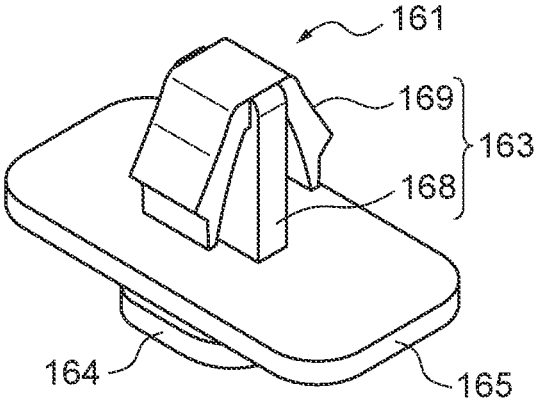

FIG.7A

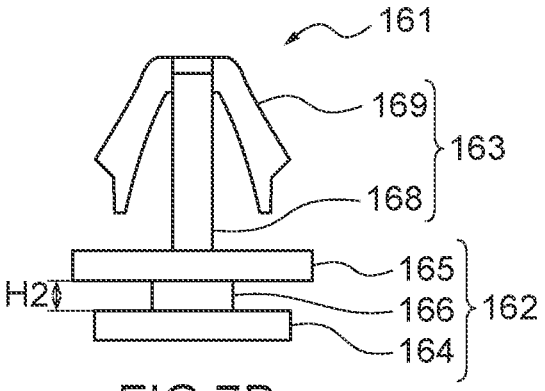

FIG.7B

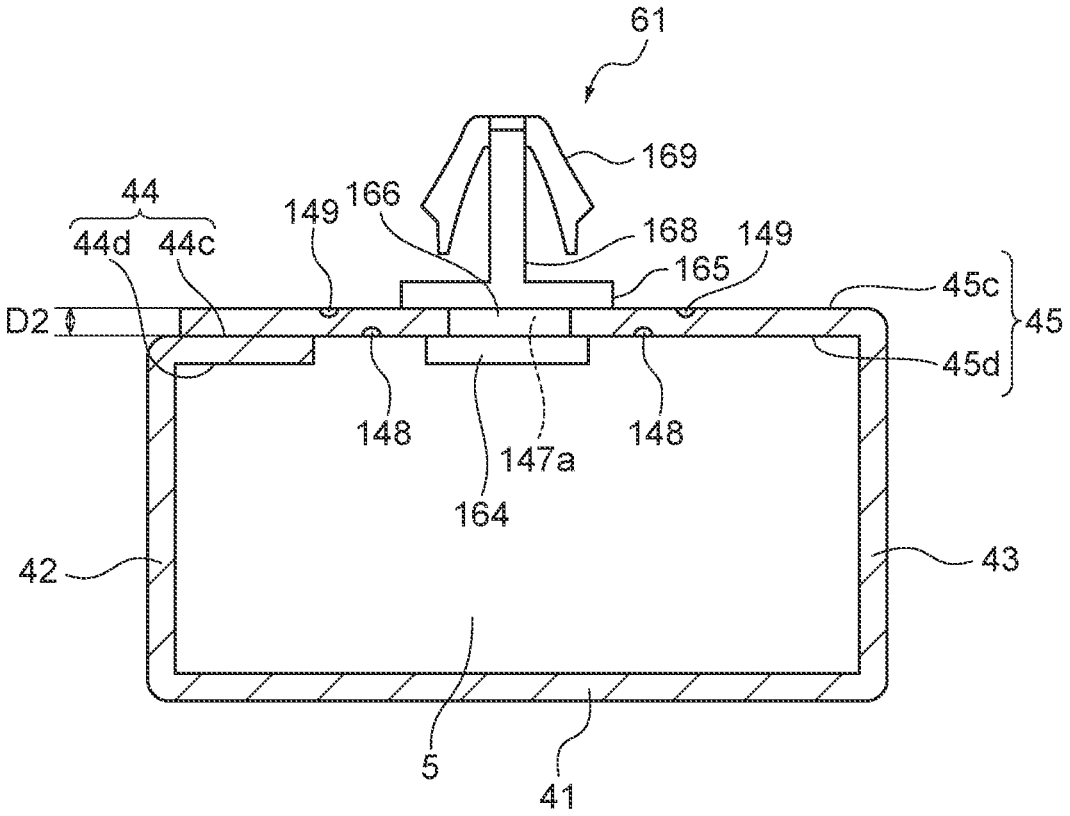
61
169
44
44d
44c
149
166
168
149
165
45c
45
D2
45d
148
147a
148
164
42
43
5
41

FIG.8

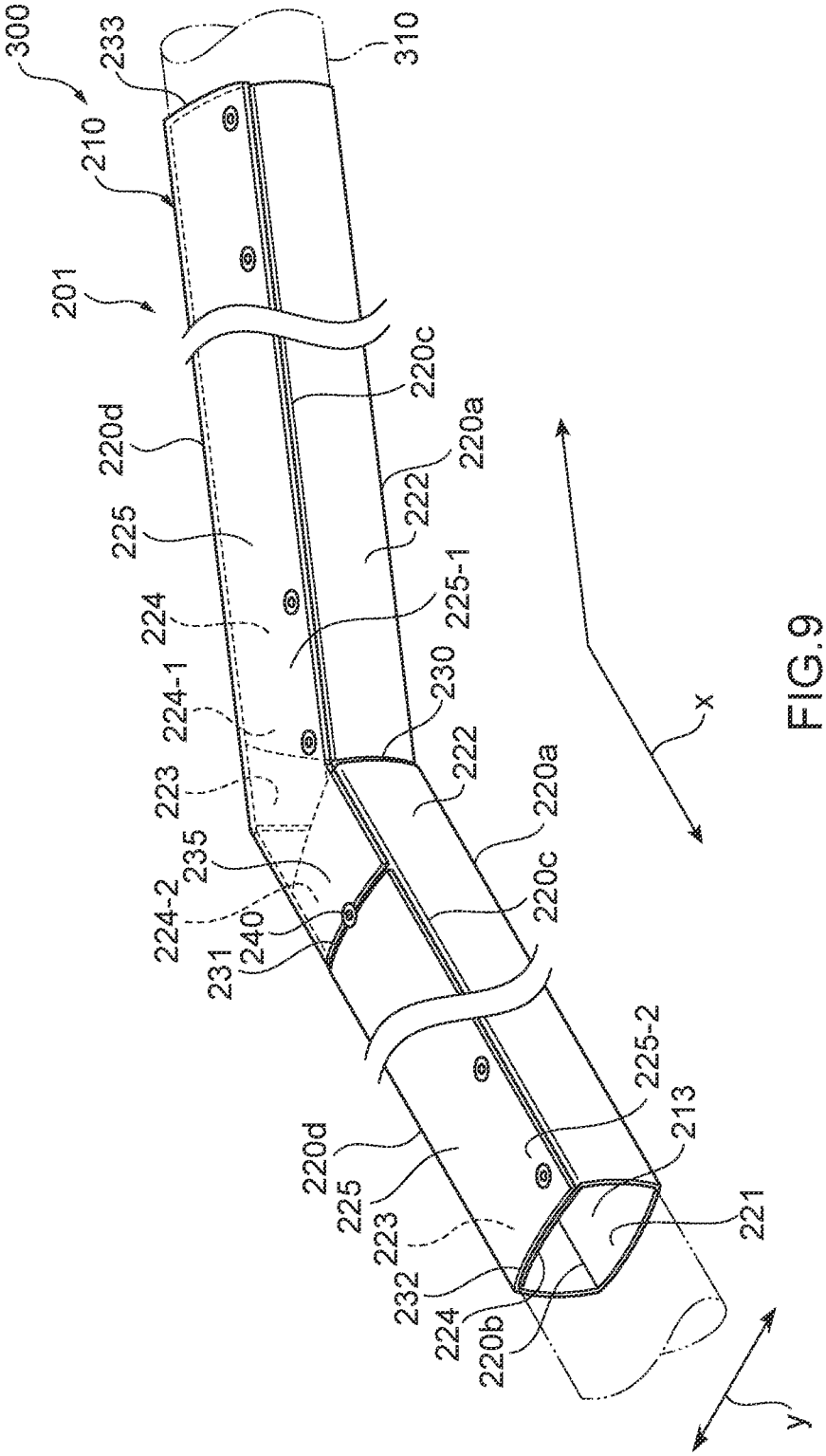
300
233
310
210
201
220d
220c
220a
225
222
224
225-1
224-1
230
223
222
235
220a
224-2
240
220c
231
225-2
213
220d
225
221
223
232
224
220b
x
y

FIG.9

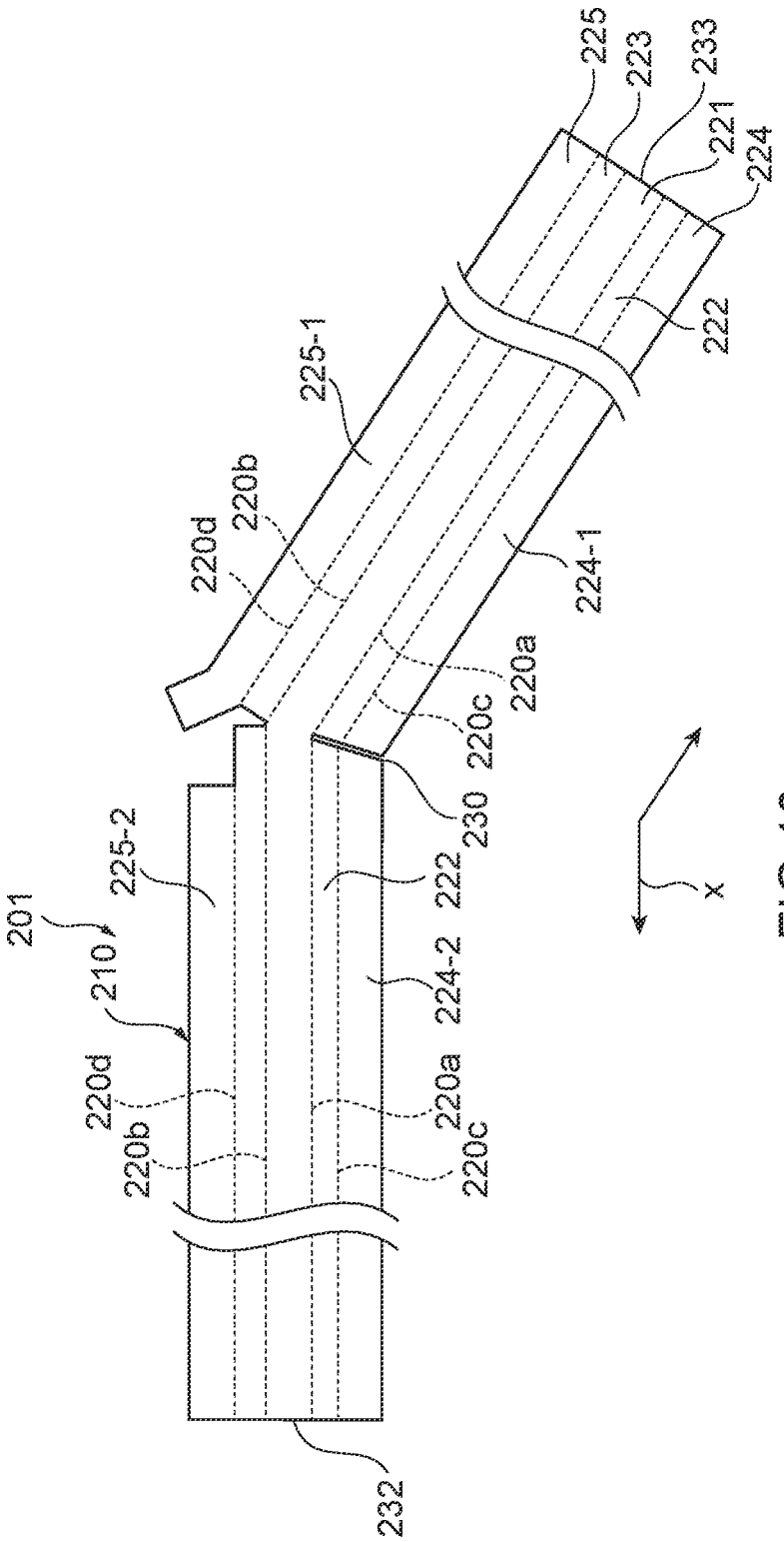
225
223
233
221
224
222
225-1
220b
220d
224-1
220a
220c
230
x
225-2
222
201
210
224-2
220d
220a
220b
220c
232

FIG.10

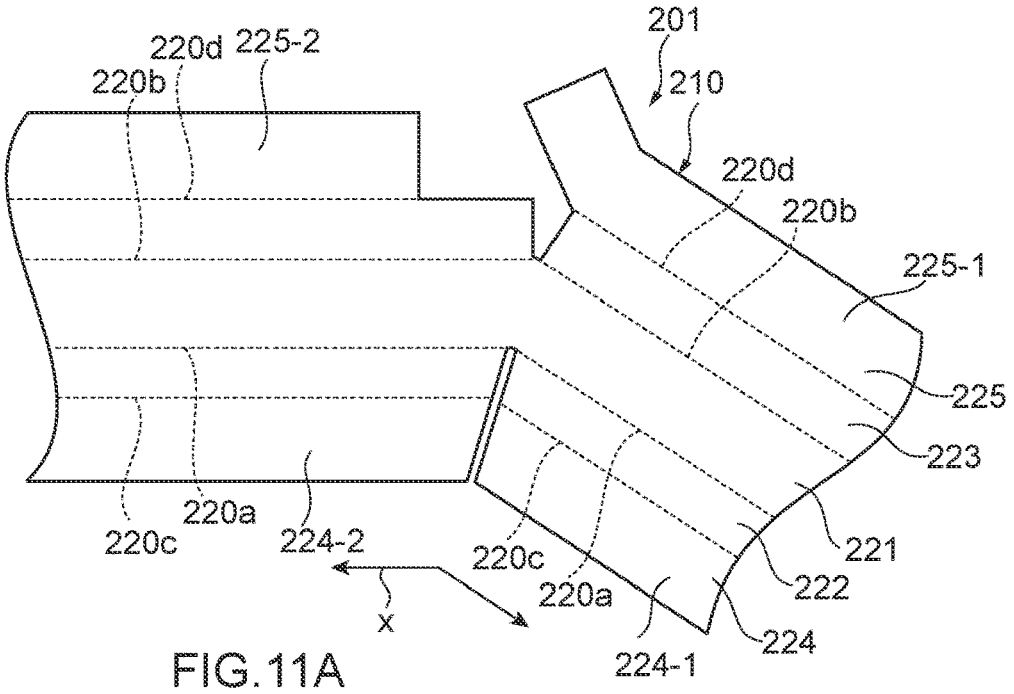

FIG.11A

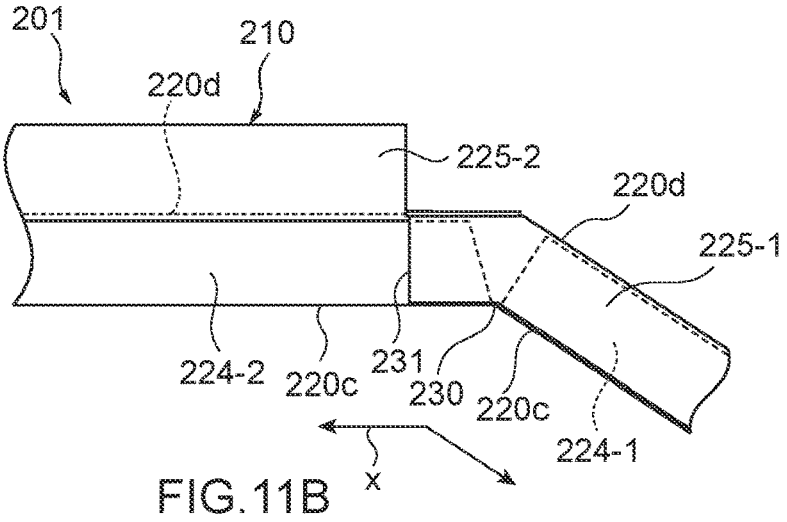

FIG.11B

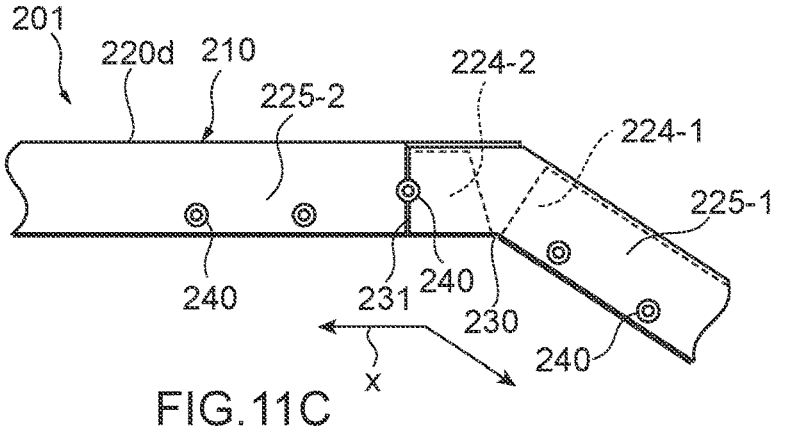

FIG.11C

WIRE EXTERIOR BODY AND EXTERIOR-COVERED WIRE HARNESS

CROSS REFERENCE TO RELATED APPLICATIONS

This application is the National Phase of PCT International Application No. PCT/JP2018/048070, filed on Dec. 27, 2018, which claims priority under 35 U.S.C. 119(a) to Patent Application Nos. 2017-254624, filed in Japan on Dec. 28, 2017; and 2017-254625, filed in Japan on Dec. 28, 2017, all of which are hereby expressly incorporated by reference into the present application.

TECHNICAL FIELD

The present invention relates to a wire exterior body to be mounted on the outer periphery of an electrical wire such as a wire harness, and an exterior-covered wire harness. The present invention also relates to a wire exterior body to be mounted on the outer periphery of an electrical wire, and an exterior-covered wire harness, and particularly relates to a wire exterior body including a branch portion and/or a bent portion in the wire extending direction, and an exterior-covered wire harness.

BACKGROUND ART

As a wire exterior body to be mounted on the outer periphery of an electric wire to be routed in a vehicle or the like, a protector for protecting a wire bundle from external forces has been known. In such a protector, a plate member is bent in a form of doubly surrounding the periphery of a wire bundle to form an accommodating space in a longitudinal cylindrical shape for accommodating the wire bundle (see Patent Literature 1).

The protector has a through-hole into which a locking part for attaching to a vehicle body is to be inserted. Then, with a pair of fixing chips of the locking part inserted in the through-hole sandwiching a portion where the plate member is overlapped, the overlapped state of the plate member is maintained and the locking part can be inserted into the attachment hole of a vehicle body.

Conventionally, an exterior body for a wire harness is used for attaching and fixing the wire harness to a vehicle body or the like. Further, when the wire harness is accommodated in an accommodating part of the exterior body, the exterior body exhibits a function of regulating the route of the wire harness and a function of protecting the wire harness. To regulate the route of the wire harness, the exterior body may be provided with a branch portion and/or a bent portion in the extending direction of the electric wire.

Furthermore, from the viewpoint of light weight and the like, an exterior body formed of a resin sheet that is bent is also considered. In an exterior body formed of a resin sheet that is bent, a branch portion and/or a bent portion has room for improving the mechanical strength, in particular, mechanical strength with respect to a stress from an orthogonal direction to the extending direction of the wire harness. If the mechanical strength in the branch portion and/or bent portion is not sufficient, a protective function with respect to the wire harness is lowered in the branch portion and/or bent portion, and workability for attaching the exterior-covered wire harness to a vehicle body panel or the like may be lowered.

Meanwhile, as an exterior body provided with a bent portion, an exterior body including a plurality of side plate parts linked to make an angle along the peripheral direction of the exterior body and a bendable portion has been proposed. The bendable portion can be bent by a bellows part that is formed such that a plurality of peak top portions and a plurality of valley bottom portions are alternately formed along the axial direction of the exterior body in the plurality of side plate parts (Patent Literature 2).

However, even in Patent Literature 2, the bellows part still has room for improving the mechanical strength. Further, in order to produce a bellows structure, there is not only a problem that higher processing costs are required but also a problem that extra materials are required. Furthermore, in Patent Literature 2, since the bendable portion is not fixed, workability for attaching the wire harness that is bent to be routed to a vehicle cannot be obtained.

DOCUMENT LIST

Patent Literatures

Patent Literature 1: Japanese Patent Application Publication No. 2017-055510

Patent Literature 2: Japanese Patent Application Publication No. 2015-126668

SUMMARY OF INVENTION

Technical Problem

However, in the conventional protector described above, a stress is generated in the portion where the locking part and the plate member is joined due to vibration during traveling of a vehicle, which may damage the protector. Therefore, a wire exterior body and an exterior-covered wire harness in which damage by an attaching member for attaching to a vehicle body is prevented has been required.

The present invention has been made in view of the aforementioned problem, and it is an object of the present invention to provide a wire exterior body and an exterior-covered wire harness in which damage by an attaching member is prevented.

The present invention has been made in view of the aforementioned condition, and it is an object of the present invention to provide a wire exterior body having excellent mechanical strength even in a branch portion and/or a bent portion, having an excellent protective function with respect to electric wires, and having excellent workability when attaching an exterior-covered wire harness to a vehicle panel or the like.

Solution to Problem

[1] In order to achieve the objects described above, a wire exterior body of the present invention is a wire exterior body to be mounted on an outer periphery of an electric wire, the wire exterior body being formed of a resin sheet that is bent. The wire exterior body includes a plurality of wall parts extending along an extending direction of the electric wire and forming an accommodating part that accommodates the electric wire. Among the plurality of the wall parts, at least one wall part has a through-hole, penetrating in a thickness direction of the resin sheet, into which an attaching member attachable to a vehicle body is inserted, and a groove in which a thickness of the resin sheet is reduced is formed on a part around the through-hole on at least one surface of an upper surface and a lower surface facing the thickness direction.

[2] In the wire exterior body of the present invention, the groove is formed at positions facing each other over the through-hole.

[3] In the wire exterior body of the present invention, the groove is an annular groove surrounding the through-hole.

[4] In the wire exterior body of the present invention, the width of the groove is 0.7 mm or more and 0.9 mm or less.

[5] In the wire exterior body of the present invention, the depth of the groove is 60% or more and 80% or less of the thickness of the resin sheet.

[6] In the wire exterior body of the present invention, the density of the resin sheet in the groove is higher than the density of the resin sheet except for the groove in the upper surface and the lower surface facing the thickness direction, and is 400 Kg/m^3 or more and 1200 Kg/m^3 or less.

[7] In order to achieve the objects described above, an exterior-covered wire harness of the present invention includes a wire harness and the wire exterior body, and the wire exterior body is characterized as to be mounted on an outer periphery of the wire harness.

[8] An aspect of the present invention is a wire exterior body to be mounted on an outer periphery of an electric wire, the wire exterior body being formed of a resin sheet that is bent. The wire exterior body includes a plurality of wall parts extending along an extending direction of the electric wire and forming an accommodating part that accommodates the electric wire. The plurality of the wall parts includes a branch portion and/or a bent portion in the extending direction of the electric wire, and among the plurality of the wall parts, two wall parts facing each other over the accommodating part are provided across the branch portion and/or bent portion along the extending direction of the electric wire.

[9] The wire exterior body according to [8], wherein branching of the branch portion and/or bending of the bent portion is formed toward a short direction of the two wall parts facing each other.

[10] An aspect of the present invention is the wire exterior body according to [8] or [9], wherein one wall part forming the two wall parts facing each other is joined to at least one of the plurality of the wall parts in a direction extending from the branch portion and/or bent portion.

[11] An aspect of the present invention is the wire exterior body according to any one of [8] to [10], wherein at least a partial area of one wall part forming the two wall parts facing each other includes a wall-surface overlapping portion that overlaps at least one of the plurality of the wall parts, and in the wall-surface overlapping portion, the one wall part is joined to at least one of the plurality of the wall parts.

[12] An aspect of the present invention is the wire exterior body according to [11], wherein the one wall part is divided in the wall-surface overlapping portion to thereby form a boundary portion, and the one wall part is joined to at least one of the plurality of the wall parts in the boundary portion.

[13] An aspect of the present invention is the wire exterior body according to any one of [8] to [12], wherein the resin sheet is a thermoplastic resin foamed sheet.

[14] An aspect of the present invention is the wire exterior body according to [13], wherein the density of the thermoplastic resin foamed sheet except for a bending portion is 200 Kg/m^3 or more and 700 Kg/m^3 or less.

[15] An aspect of the present invention is the wire exterior body according to [13] or [14], wherein the thickness of the thermoplastic resin foamed sheet except for a bending portion is 0.50 mm or more and 4.0 mm or less.

[16] An aspect of the present invention is the wire exterior body according to any one of [13] to [15], wherein the density of a bending portion of the thermoplastic resin foamed sheet is 400 Kg/m^3 or more and 1200 Kg/m^3 or less.

[17] An aspect of the present invention is the wire exterior body according to any one of [13] to [16], wherein the thermoplastic resin foamed sheet includes a curved portion having R 0.1 mm or more and 1.0 mm or less in a cut surface.

[18] An aspect of the present invention is the wire exterior body according to any one of [13] to [17], wherein the thermoplastic resin foamed sheet includes a non-foam layer on both surfaces.

[19] An aspect of the present invention is the wire exterior body according to [18], wherein the thickness of the non-foam layer is 10 μm or more and 100 μm or less.

[20] An aspect of the present invention is the wire exterior body according to any one of [13] to [19], wherein Shore hardness (HSC) of the thermoplastic resin foamed sheet is 60 or more and 100 or less.

[21] An aspect of the present invention is an exterior-covered wire harness including a wire harness and the wire exterior body according to any one of [8] to [20], and the wire exterior body is mounted on the outer periphery of the wire harness.

Effects of Invention

According to a wire exterior body and an exterior-covered wire harness of the present invention, it is possible to prevent damage caused by an attaching member.

According to an aspect of the wire exterior body of the present invention, since two wall parts facing each other over the accommodating part, among the plurality of the wall parts, are provided across the branch portion and/or bent portion along the extending direction of the electric wire, it is possible to obtain a wire exterior body having excellent mechanical strength even in the branch portion and/or the bent portion, having an excellent protective function with respect to the electric wire, and having excellent workability when attaching an exterior-covered wire harness to a vehicle panel or the like.

Further, since the mechanical strength is excellent even in the branch portion and/or bent portion, even if an exterior-covered wire harness is attached to a vehicle in which vibration is likely to be generated such as an automobile, it is possible to prevent vibration sound from being generated from the exterior-covered wire harness. Furthermore, since the wire exterior body includes two wall parts facing each other that are provided across the branch portion and/or bent portion, durability of the branch portion and/or bent portion is improved.

According to an aspect of the wire exterior body of the present invention, one wall part of the two wall parts facing each other is fixed to at least one of the plurality of the wall parts in a direction extending from the branch portion and/or bent portion, the mechanical strength in the branch portion and/or bent portion is further improved.

According to an aspect of the wire exterior body of the present invention, the one wall part is divided in a wall-surface overlapping portion to thereby form a boundary portion, and the one wall part is fixed to at least one of the plurality of the wall parts in the boundary portion, efficiency of the fixing work is improved.

BRIEF DESCRIPTION OF DRAWINGS

FIG. **1** A perspective view showing an exterior body and an exterior-covered wire harness of a first embodiment of the present invention.

FIG. **2** A perspective view showing the exterior body, in a developed state, of the first embodiment of the present invention.

FIG. **3**A, **3**B A view for showing an example of an attaching member, to be engaged with the exterior body of the first embodiment of the present invention, for attaching the exterior body to a vehicle body, in which FIG. **3**A is a perspective view of the attaching member and FIG. **3**B is a plan view of the attaching member.

FIG. **4** A cross-sectional view of the exterior body in a cross section taken along line A-A shown in FIG. **1**.

FIG. **5** A perspective view showing an exterior body and an exterior-covered wire harness of a second embodiment of the present invention.

FIG. **6** A perspective view showing the exterior body, in a developed state, of the second embodiment of the present invention.

FIG. **7**A, **7**B A view for showing an example of an attaching member for attaching the exterior body of the second embodiment of the present invention to a vehicle body, in which FIG. **7**A is a perspective view of the attaching member and FIG. **7**B is a plan view of the attaching member.

FIG. **8** A cross-sectional view of the exterior body in a cross section taken along line B-B shown in FIG. **5**.

FIG. **9** A perspective view showing an exterior body and an exterior-covered wire harness of an exemplary embodiment of the present invention.

FIG. **10** A perspective view illustrating the exterior body for an electrical wire, shown in FIG. **9**, in a developed state.

FIG. **11**A, **11**B, **11**C An explanatory view of a method of assembling an exterior body for an electrical wire of an exemplary embodiment of the present invention.

DESCRIPTION OF EMBODIMENTS

Hereinafter, embodiments of the present invention will be specifically described with reference to the drawings.

First, a configuration of an exterior-covered wire harness of a first embodiment of the present invention will be described with reference to FIG. **1**. FIG. **1** is a perspective view showing an exterior body **3** and an exterior-covered wire harness **1** of the first embodiment of the present invention.

Note that a longitudinal direction (length direction) of the exterior body **3** is assumed to be "X" and a short direction (width direction) of the exterior body **3** is assumed to be "Y" for convenience of description.

As shown in FIG. **1**, the exterior-covered wire harness **1** according to the first embodiment of the present invention includes a wire harness **2** in which a plurality of electric wires are bundled, and an exterior body for an electric wire (hereinafter, also referred to as "exterior body") **3** to be mounted on the outer periphery of the wire harness **2**. The wire harness **2** is protected from the external environment by the exterior body **3**. Note that in FIG. **1**, while the wire harness **2** is shown in one columnar shape, the wire harness **2** is one including one or more electric wires. In the exterior-covered wire harness **1** of the first embodiment of the present invention, a plurality of (two, in the first embodiment of the present invention) attaching members **61** for attaching to a vehicle (not shown) are engaged near the center in the short direction Y.

Next, a configuration of the exterior body **3** of the first embodiment of the present invention will be described with referent to FIGS. **1** and **2**. FIG. **2** is a perspective view showing the exterior body **3** in a developed state.

As illustrated in FIG. **1**, the exterior body **3** includes a plurality of wall parts **4** extending along the extending direction (longitudinal direction X) of the wire harness (electric wire) **2**, and an accommodating part **5** that is formed by being surrounded by the wall parts **4** and accommodates the wire harness **2**. The exterior body **3** has a cross section in which the shape in the short direction Y is a rectangular shape or a substantially rectangular shape.

As shown in FIGS. **1** and **2**, the wall parts **4** is integrally formed by bending one thermoplastic resin foamed sheet. The resin type of the thermoplastic resin foamed sheet is not particularly limited as long as it is thermoplastic resin, including, for example, polyethylene resin, polypropylene resin, polycarbonate resin, polyethylene terephthalate resin, polybutylene terephthalate resin, polyamide resin, polyphenylene sulfide resin, polystyrene resin, polyvinyl chloride resin, polyvinyl acetate resin, polytetrafluoroethylene resin, acrylic resin, or the like. Moreover, from the viewpoint of further improving the balance between the bending easiness and the mechanical strength such as tensile strength, it is preferable that the thickness of the thermoplastic resin foamed sheet is 0.50 mm or more and 4.0 mm or less, and it is more preferable that the thickness is 0.8 mm or more and 2.5 mm or less.

As illustrated in FIG. **2**, the wall parts **4** are formed by bending a thermoplastic resin foamed sheet at bending portions **20***a* to **20***d*. The bending portions **20***a* to **20***d* are in a shape easy for bending formation by forming an extrusion-molded portion by extrusion molding, a half-cut portion, a cut portion in a broken line shape, and the like in the flat thermoplastic resin foamed sheet.

The wall parts **4** includes a bottom wall part **41**, a side wall part **42** provided continuously from an edge of the bottom wall part **41** via the bending portion **20***a*, a side wall part **43** provided continuously from an edge of the bottom wall part **41** via the bending portion **20***b*, a lower lid wall part (inner wall part) **44** provided continuously from an edge of the side wall part **42** via the bending portion **20***c*, and an upper lid wall part (outer wall part) **45** provided continuously from an edge of the side wall part **43** via the bending portion **20***d*.

As shown in FIG. **1**, the bottom wall part **41** is disposed between the side wall part **42** and the side wall part **43**, the side wall part **42** is erected from an edge of the bottom wall part **41** via the bending portion **20***a*, and the side wall part **43** is erected from an edge of the bottom wall part **41** via the bending portion **20***b*.

The lower lid wall part **44** and the upper lid wall part **45** overlap each other, and the overlapping portion forms a wall-surface overlapping portion. Specifically, the wall-surface overlapping portion is a portion in which the upper lid wall part **45** is superposed on the lower lid wall part **44** from above, and an upper surface **44***c* of the lower lid wall part **44** and a lower surface **45***d* of the upper lid wall part **45** are joined to each other (refer to FIG. **4** described below). Note that a joining means between the upper surface **44***c* of the lower lid wall part **44** and the lower surface **45***d* of the upper lid wall part **45** may include an adhering means such as an adhesive and an adhesive tape, a welding means such as ultrasonic welding and heat welding, a fitting means using a locking member, a rivet, and the like, a penetration fixing means using a stapler or the like, for example. With the wall-surface overlapping portion, the attaching member **61** for attaching the exterior body **3** to a vehicle is engaged.

The lower lid wall part **44** is disposed parallel or almost parallel to the bottom wall part **41** from an edge of the side wall part **42** via the bending portion **20***c*, and is disposed

inside (accommodating part **5** side) in the overlapping portion. An edge **44***a* of the lower lid wall part **44** is disposed at a position away from the opposite bending portion **20***d*. Specifically, the edge **44***a* of the lower lid wall part **44** is disposed at a position not contacting the attaching member **61** engaged near the center in the short direction Y, that is, a side closer to the bending portion **20***c* from the center in the short direction Y.

The upper lid wall part **45** is disposed parallel or almost parallel to the bottom wall part **41** from an edge of the side wall part **43** via the bending portion **20***d*, and is disposed outside of the overlapping portion. The upper lid wall part **45** is disposed such that the edge **45***a* is almost flush with the side wall part **42** in a state of being disposed on the upper side of the lower lid wall part **44**. As described below, the upper lid wall part **45** has a through-hole **47**, penetrating in the thickness direction of the thermoplastic resin foamed sheet, into which the attaching member **61** is inserted, and a lower surface groove **48** and an upper surface groove **49** formed on an upper surface **45***c* and on a lower surface **45***d* facing in the thickness direction of the thermoplastic resin foamed sheet (see FIG. **2**). As described below, in the first embodiment of the present invention, description will be given in the case where the lower surface groove **48** and the upper surface groove **49** are annular grooves surrounding the through-hole **47**.

The accommodating part **5** is a part surrounded by the bottom wall part **41**, the side wall parts **42** and **43**, the lower lid wall part **44**, and the upper lid wall part **45**. The accommodating part **5** is formed in a cylindrical shape in which one side and another side penetrate in the longitudinal direction X by the bottom wall part **41**, the side wall parts **42** and **43**, the lower lid wall part **44**, and the upper lid wall part **45**, and can accommodate the wire harness **2**.

Next, an example of an attaching member to be engaged with the exterior body **3** will be described with reference to FIG. **3**A and FIG. **3**B. FIG. **3**A and FIG. **3**B is a view showing an example of an attaching member for attaching the exterior body **3** to a vehicle body, in which FIG. **3**A is a perspective view of the attaching member **61**, and FIG. **3**B is a side view of the attaching member when viewed from the longitudinal direction X side. Note that the attaching member **61** shown in FIG. **3**A and FIG. **3**B is an example of an attaching member to be engaged with the exterior body **3** of the first embodiment of the present invention. An attaching member to be engaged with the exterior body **3** may be another similar attaching member.

As shown in FIGS. **3**A and **3**B, the attaching member **61** includes an exterior body-side engagement portion **62** to be attached to the exterior body **3** and a vehicle body-side engagement portion **63** to be attached to a vehicle body.

The exterior body-side engagement portion **62** has a bottom part **64** disposed on the lower surface **45***d* of the upper lid wall part **45**, an erecting part **65** that is disposed inside the through-hole **47** of the upper lid wall part **45**, is formed to be narrower than the width of the bottom part **64** in the short direction Y (see FIG. **1**), and erects upward from the bottom part **64**, and an insertion hole **66** dented from above to below of the erecting part **65** so as to allow an insertion part **70**, described below, to be inserted.

The vehicle body-side engagement portion **63** has a base part **67** that is formed to have a width that is the same or almost the same as that of the bottom part **64** and is disposed on the upper surface **45***c* of the upper lid wall part **45**, the bottom part **64** in the short direction Y (see FIG. **1**), a pillar **68** that is formed to be narrower than the widths of the erecting part **65** and the base part **67** and extends upward from the base part **67**, a wing part **69** formed to project to both sides from the top end of the pillar **68**, and the insertion part **70** that extends downward from the base part **67**. The wing part **69** is formed to be able to be inserted into an attachment hole (not shown) of the vehicle body, and also to be elastically deformable to be able to be locked after insertion. When the insertion part **70** is inserted in the insertion hole **66**, the tip end portion of the insertion part **70** is elastically deformed inward, and when it goes over the locking part **66***a* of the insertion hole **66**, it is elastically restored and contacts the periphery of the locking part **66***a* to be locked. When the insertion part **70** is locked by the locking part **66***a*, the upper end of the erecting part **65** contacts the lower surface of the base part **67**, and the exterior body-side engagement portion **62** and the vehicle body-side engagement portion **63** are locked.

Next, with reference to FIGS. **2** and **4**, shapes of the through-hole **47**, the lower surface groove **48**, and the upper surface groove **49** formed on the upper lid wall part **45** will be described. FIG. **4** is a cross-sectional view of the exterior body **3** in a cross section taken along line A-A shown in FIG. **1**.

As shown in FIGS. **2** and **4**, the through-hole **47** is a hole penetrating from the upper surface **45***c* to the lower surface **45***d* that is on the accommodating part **5** side, in the upper lid wall part **45**. The through-hole **47** is formed such that the width in the short direction Y (see FIG. **1**) is slightly larger than the width in the short direction Y of the erecting part **65** so as to allow the erecting part **65** of the attaching member **61** to be inserted and positioned inside. As shown in FIG. **4**, it is preferable that a depth D**1** of the through-hole **47** is the same or almost the same as a height H**1** of the erecting part **65** (see FIG. **3**B) (D**1**=H**1**), from the viewpoint of preventing the erecting part **65** from protruding from the lower surface **45***d* of the upper lid wall part **45**. That is, the thermoplastic resin foamed sheet forming a plurality of wall parts **4** has a thickness that is the same as or a thickness almost the same as the height H**1** of the erecting part **65** to be inserted into the through-hole **47**, and it is preferable to form the through-hole **47** using the thermoplastic resin foamed sheet.

As shown in FIGS. **2** and **4**, the lower surface groove **48** and the upper surface groove **49** are disposed at positions different from each other in the thickness direction of the thermoplastic resin foamed sheet. The lower surface groove **48** and the upper surface groove **49** are extrusion-molded portions formed such that the thermoplastic resin foamed sheet is extrusion-molded to have groove shapes where the thickness of the thermoplastic resin foamed sheet is reduced.

The lower surface groove **48** and the upper surface groove **49** will be described specifically. The present inventor manufactured several pieces of thermoplastic resin foamed sheets with no groove (comparative example) and several pieces of thermoplastic resin foamed sheets with grooves (Example 1, Example 2, Example 3, Example 4), performed destructive testing to give impact on those thermoplastic resin foamed sheets, and evaluated the destructive state by visually recognizing presence or absence of destruction.

Among the thermoplastic resin foamed sheets in which grooves are formed, in Example 1 and Example 2, a groove of 0.7 mm width is formed by using a blade having a thickness of 0.7 mm for forming the groove, and in Example 3 and Example 4, a groove of 0.9 mm width is formed by using a blade having a thickness of 0.9 mm for forming the groove. Moreover, in Example 1 and Example 3, the depth of the groove is 60% of the thickness of the thermoplastic resin foamed sheet, and in Example 2 and Example 4, the depth of the groove is 75% of the thickness of the thermo-

plastic resin foamed sheet. Then, with respect to Example 1, Example 2, Example 3, and Example 4, destructive testing was performed to give impact on the groove forming surfaces on which grooves were formed and the rear surfaces on which no groove was formed. Table 1 shows results of visually recognizing presence or absence of destruction.

TABLE 1

ITEM		COMPARATIVE EXAMPLE1	EXAMPLE1	EXAMPLE2	EXAMPLE3	EXAMPLE4
BLADE THICKNESS (mm)		—	0.7		0.9	
GROOVE DEPTH (%)		—	60	75	60	75
IMPACT DESTRUCTION	GROOVE FORMED SURFACE	—	Δ	○	○	◎
	REAR SURFACE	X	Δ	○	Δ	○

X: ALL DESTRUCTED
Δ: SOME DESTRUCTED
○: ALMOST ALL NOT DESTRUCTED
◎ ALL NOT DESTRUCTED

As shown in Table 1, in the thermoplastic resin foamed sheets of the comparative example, destruction was recognized in all of the manufactured thermoplastic resin foamed sheets. On the other hand, in the thermoplastic resin foamed sheets of Example 1, destruction was recognized in some of the manufactured thermoplastic resin foamed sheets. However, in the thermoplastic resin foamed sheets of Example 2, destruction was not recognized in almost all of the manufactured thermoplastic resin foamed sheets. Further, in the thermoplastic resin foamed sheets of Example 3, destruction was not recognized in almost all of the thermoplastic resin foamed sheets when impact was given to the surfaces on which grooves were formed, but destruction was recognized in some of the thermoplastic resin foamed sheets when impact was given to the rear surfaces. In the thermoplastic resin foamed sheets of Example 4, destruction was not recognized in all of the manufactured thermoplastic resin foamed sheets when impact was given on the surfaces on which grooves were formed, but destruction was not recognized in almost all of the manufactured thermoplastic resin foamed sheets when impact was given to the rear surfaces.

In view of the above, in the thermoplastic resin foamed sheets of Examples 1 to 4, the number of destructed thermoplastic resin foamed sheets was small compared with the thermoplastic resin foamed sheets of the comparative example. That is, it can be evaluated that the thermoplastic resin foamed sheets on which grooves are formed of Examples 1 to 4 are superior as the exterior body **3** because they are displaced when impact is applied so that the stress is mitigated. Therefore, in the first embodiment of the present invention, the lower surface groove **48** and the upper surface groove **49** are formed on the exterior body **3**. Further, from the viewpoint of preventing destruction of the thermoplastic resin foamed sheet, in the grooves of the lower surface groove **48** and the upper surface groove **49**, it is preferable that the width of the groove is 0.7 mm or more and 0.9 mm or less and that the depth of the groove is 60% or more and 80% or less of the thickness of the thermoplastic resin foamed sheet.

The lower surface groove **48** and the upper surface groove **49** are high-density portions in which the density of the thermoplastic resin foamed sheet is higher than that of the wall parts **4** except for the bending portions **20***a* to **20***d*. The density of the thermoplastic resin foamed sheet in the lower surface groove **48** and the upper surface groove **49** may be the same or almost the same as the density of the bending portions **20***a* to **20***d*. Moreover, in the lower surface groove **48** and the upper surface groove **49**, from the viewpoint of preventing damages in the thermoplastic resin foamed sheet, it is preferable that the density is 400 Kg/m^3 or more and 1200 Kg/m^3 or less, and it is more preferable that the density is 500 Kg/m^3 or more and 1200 Kg/m^3 or less, although the density is not particularly limited as long as it is a higher value than that of the wall parts **4** except for the bending portions **20***a* to **20***d*.

The lower surface groove **48** is an elliptic and annular groove surrounding the through-hole **47**, and having a shape dented from the lower surface **45***d* toward the upper surface **45***c* of the upper lid wall part **45**. As shown in FIG. **4**, the lower surface groove **48** is formed in the upper lid wall part **45** except for the wall-surface overlapping portion in which the lower lid wall part **44** and the upper lid wall part **45** overlap each other. Specifically, the lower surface groove **48** is disposed around the bottom part **64** of the attaching member **61** disposed on the lower surface **45***d* of the upper lid wall part **45**, and is disposed inside the upper surface groove **49**.

The upper surface groove **49** is an elliptic and annular groove disposed outside the lower surface groove **48**, and having a shape dented from the upper surface **45***c* toward the lower surface **45***d* of the upper lid wall part **45**. As shown in FIG. **4**, the upper surface groove **49** is formed in the lower lid wall part **44** except for the wall-surface overlapping portion in which the lower lid wall part **44** and the upper lid wall part **45** overlap each other. Specifically, the upper surface groove **49** is disposed around the base part **67** of the attaching member **61** disposed on the upper surface **45***c* of the upper lid wall part **45**, and is disposed outside the lower surface groove **48**. That is, in a cross section as viewed in the short direction Y of the exterior body **3**, the upper surface groove **49** is disposed on the side wall parts **42** and **43** side from the lower surface groove **48**.

Note that in the first embodiment of the present invention, description has been given on the case where the lower surface groove **48** and the upper surface groove **49** are annular grooves surrounding the through-hole **47**. However, they may be in another shape. For example, the lower surface groove **48** and the upper surface groove **49** may be linear grooves positioned to face each other over the through-hole **47**. Further, the linear groove may extend in the longitudinal direction X or extend in the short direction. Furthermore, the linear groove may be in a straight-line shape or in a curved-line shape.

Next, a method of forming the exterior body **3** described above and a method of forming the exterior-covered wire harness **1** by attaching the wire harness **2** to the exterior body **3** will be described.

In the method of forming the exterior body **3**, first, stamping is performed to stamp out a portion corresponding to the exterior body **3** from a thermoplastic resin foamed sheet serving as a base material for forming the exterior body **3**. As stamping, for example, stamping using a Thomson blade mold can be considered from the viewpoint of cost reduction and easy processing.

After stamping out the portion corresponding to the exterior body **3**, stamping is performed to stamp out the portion corresponding to the through-hole **47** at a position where the attaching member **61** of the upper lid wall part **45** is to be attached.

Further, in the stamped-out portion corresponding to the exterior body **3**, extrusion molding is performed on the portions corresponding to the bending portions **20***a* to **20***d*. Through the extrusion molding, the bending portions **20***a* to **20***d* are formed, and good bending property is given to the bending portions **20***a* to **20***d*.

Furthermore, in the stamped-out portion corresponding to the exterior body **3**, extrusion molding is performed on the portions corresponding to the upper surface groove **49** and the lower surface groove **48**. Through the extrusion molding, the upper surface groove **49** and the lower surface groove **48** are formed.

In the method of attaching the exterior body **3**, formed as described above, to the wire harness **2**, first, the exterior body **3** is bent at the bending portions **20***a* and **20***b* such that the side wall parts **42** and **43** become almost perpendicular to the bottom wall part **41**. When the bending portions **20***a* and **20***b* are bent, the space between the end portion sides of the side wall parts **42** and **43** opens upward along the longitudinal direction X.

After the bending portions **20***a* and **20***b* are bent, the wire harness **2** is placed on the bottom wall part **41**, and the bending portion **20***c* is bent such that the lower lid wall part **44** becomes almost parallel to the bottom wall part **41**. Thereafter, the bending portion **20***d* is bent such that the upper lid wall part **45** becomes almost parallel to the bottom wall part **41**. When the upper lid wall part **45** is bent at the bending portion **20***d*, the lower lid wall part **44** and the upper lid wall part **45** overlap each other to form a wall-surface overlapping portion. When the upper lid wall part **45** is bent at the bending portion **20***d*, the opening between the side wall part **42** and the side wall part **43** is closed to form the accommodating part **5**, and the wire harness **2** is accommodated in the accommodating part **5** in an inserted state. Further, in the wall-surface overlapping portion, the lower lid wall part **44** and the upper lid wall part **45** are joined to each other, whereby a state where the opening between the side wall part **42** and the side wall part **43** is closed is fixed, so that the exterior body **3** is mounted on the outer periphery of the wire harness **2**.

After the exterior body **3** is mounted on the outer periphery of the wire harness **2**, the erecting part **65** of the attaching member **61** is inserted upward into the through-hole **47** of the upper lid wall part **45** from the lower surface **45***d* side of the upper lid wall part **45**, and the insertion part **70** of the attaching member **61** is inserted downward into the through-hole **47** from the upper surface **45***c* side of the upper lid wall part **45**. Then, when the insertion part **70** of the attaching member **61** is inserted into the insertion hole **66** of the attaching member **61** and is locked, the upper end of the erecting part **65** contacts the lower surface of the base part **67**, and the upper lid wall part **45** is interposed between the bottom part **64** and the base part **67**. Moreover, since the erecting part **65** is inserted into the through-hole **47**, the attaching member **61** is engaged with the exterior body **3**, whereby the exterior body **3** can be attached to a vehicle body.

Note that the exterior body **3** may be mounted on the outer periphery of a fixing tape for fixing a plurality of electric wires forming the wire harness **2** for preventing the electric wires from falling apart, or may be mounted on the outer peripheries of a plurality of electric wires not using a fixing tape. Alternatively, the exterior body **3** may be mounted on the outer periphery of one electric wire.

As described above, according to the exterior body **3** and the exterior-covered wire harness **1** of the first embodiment of the present invention, the upper lid wall part **45** has the through-hole **47** into which the attaching member **61** is to be inserted, and the upper surface groove **49** and the lower surface groove **48** in which the thickness of the thermoplastic resin foamed sheet is reduced are formed around the through-hole **47**. Since the upper surface groove **49** and the lower surface groove **48** are formed, when a stress is caused around the through-hole **47** in which the attaching member **61** is engaged with the upper lid wall part **45**, the upper lid wall part **45** around the through-hole **47** is displaced so as to mitigate the stress. Therefore, even in the case where it is attached to a vehicle or the like in which vibration is generated, it is possible to prevent the exterior body **3** from being damaged. Although it is possible to mitigate the stress by either one of the lower surface groove **48** or the upper surface groove **49**, by forming two grooves, it is possible to mitigate the stress much more compared with the case where only one groove is formed.

Moreover, by displacing the positions of the lower surface groove **48** and the upper surface groove **49** in the surface direction of the resin foamed sheet, it is possible to prevent the thickness of the resin foamed sheet from being extremely reduced.

Moreover, in the upper surface groove **49** and the lower surface groove **48**, the density of the thermoplastic resin foamed sheet is higher than that of the wall parts **4** except for the bending portions **20***a* to **20***d*. Therefore, it is possible to prevent the strength of the upper lid wall part **45** from being lowered due to formation of grooves, so as to be able to achieve excellent durability even when it is attached to a vehicle or the like in which vibration is generated.

Next, a second embodiment of the present invention will be described with reference to FIGS. **5** to **8**. First, a configuration of an exterior-covered wire harness according to the second embodiment of the present invention will be described with reference to FIG. **5**. FIG. **5** is a perspective view showing an exterior body **103** and an exterior-covered wire harness **101** of the second embodiment of the present invention.

Note that the exterior body **103** and the exterior-covered wire harness **101** of the second embodiment of the present invention are ones in which the improvements are made to the through-hole **47**, the lower surface groove **48**, and the upper surface groove **49** in the upper lid wall part **45** of the exterior body **3** and the exterior-covered wire harness **1** of the first embodiment of the present invention. The configurations of the other parts are the same. Therefore, hereinafter, configurations that are same as or similar to those of the exterior body **3** and the exterior-covered wire harness **1** of the first embodiment of the present invention are denoted by the same reference numerals as those of the exterior body **3** and the exterior-covered wire harness **1** and the description thereof is omitted. Only different configurations will be described.

As shown in FIG. **5**, the exterior-covered wire harness **101** of the second embodiment of the present invention includes a wire harness **2** in which a plurality of electric wires are bundled, and a wire exterior body (hereinafter, also referred to as "exterior body") **103** to be mounted on the outer periphery of the wire harness **2**. In the exterior-covered wire harness **101** of the second embodiment of the present invention, a plurality of (two, in the second embodiment of the present invention) attaching members **61** for attaching to a vehicle (not shown) are engaged near the center in the short direction Y.

Next, a configuration of the exterior body **103** of the second embodiment of the present invention will be described with referent to FIG. **6**. FIG. **6** is a perspective view showing the exterior body **103** in a developed state.

As shown in FIG. **6**, the exterior body **103** includes a plurality of wall parts **4** extending along the extending direction of the wire harness **2** (longitudinal direction X), namely a bottom wall part **41**, side wall parts **42** and **43**, a lower lid wall part (inner wall part) **44**, and an upper lid wall part (outer wall part) **45**.

The upper lid wall part **45** has a through-hole **147** to which an attaching member **161** is locked, and a lower surface groove **148** and an upper surface groove **149** formed on an upper surface **45***c* and on a lower surface **45***d* facing in the thickness direction of the thermoplastic resin foamed sheet. As described below, in the second embodiment of the present invention, description will be given on the case where the lower surface groove **148** and the upper surface groove **149** are annular grooves surrounding the through-hole **47**.

Next, an example of an attaching member to be engaged with the exterior body **103** will be described with reference to FIG. **7**A and FIG. **7**B. FIG. **7**A and FIG. **7**B shows an example of an attaching member for attaching the exterior body **103** to a vehicle body, in which FIG. **7**A is a perspective view of the attaching member **161**, and FIG. **7**B is a side view of the attaching member **161** when viewed from the longitudinal direction X side. Note that the attaching member **161** shown in FIG. **7**A and FIG. **7**B is an example of an attaching member to be engaged with the exterior body **103** of the second embodiment of the present invention. The attaching member to be engaged with the exterior body **103** may be another similar attaching member.

As shown in FIGS. **7**A and **7**B, the attaching member **161** includes an exterior body-side locking part **162** to be attached to the exterior body **3** and a vehicle body-side engagement part **163** to be attached to a vehicle body.

The exterior body-side locking part **162** includes an inner-side fixing part **164** disposed on the lower surface **45***d* of the upper lid wall part **45**, an outer-side fixing part **165** formed to be wider than the width of the inner-side fixing part **164** in the short direction Y (see FIG. **5**) and disposed on the upper surface **45***c* of the upper lid wall part **45**, and a connecting part **166** that is formed to be narrower than the widths of the inner-side fixing part **164** and the outer-side fixing part **165** in the short direction Y (see FIG. **5**) and connects almost central portions of the inner-side fixing part **164** and the outer-side fixing part **165**.

The vehicle-side engagement part **163** includes a pillar **168** extending upward from the outer-side fixing part **165**, and a wing part **169** formed to project in both directions from the upper end of the pillar **168**. The wing part **169** is formed to be able to be inserted into an attachment hole (not shown) of a vehicle body, and also to be elastically deformable so as to be able to be locked after being inserted.

Next, with reference to FIGS. **6** and **8**, shapes of the through-hole **147**, the lower surface groove **148**, and the upper surface groove **149** formed on the upper lid wall part **45** will be described. FIG. **8** is a cross-sectional view of the exterior body **103** in a cross section taken along line B-B shown in FIG. **5**.

As shown in FIGS. **6** and **8**, the through-hole **147** is a hole penetrating from the upper surface **45***c* to the lower surface **45***d* that is on the accommodating part **5** side in the upper lid wall part **145**, and has a T shape when viewed from the upper surface. The through-hole **147** has a narrow portion **147***a* into which the connecting part **166** of the attaching member **161** is to be inserted, and a wide portion **147***c* that is wider than the narrow portion **147***a*.

As shown in FIG. **8**, the narrow portion **147***a* is formed such that the width in the short direction Y (see FIG. **5**) is slightly larger than the width in the short direction Y of the connecting part **166** so as to allow the connecting part **166** of the attaching member **161** to be inserted and positioned inside. It is preferable that a depth D**2** of the narrow portion **147***a* is the same or almost the same as a height H**2** of the connecting part **166** (see FIG. **7**B, FIG. **8**) (D**2**=H**2**), from the viewpoint of preventing the connecting part **166** from protruding from the lower surface **44***d* of the upper lid wall part **45**.

The wide portion **147***c* is formed so as to allow the inner-side fixing part **164** and the connecting part **166** of the attaching member **161** to be inserted and allow the inserted connecting part **166** to move to the narrow portion **147***a*. That is, the wide portion **147***c* is formed such that the width thereof in the short direction Y (see FIG. **5**) is larger than the widths of the inner-side fixing part **164** and the connecting part **166** in the short direction Y.

As shown in FIGS. **6** and **8**, the lower surface groove **148** and the upper surface groove **149** are disposed at positions different from each other in the thickness direction of the thermoplastic resin foamed sheet.

The lower surface groove **148** is a rectangular and annular groove surrounding the through-hole **47** and has a shape dented from the lower surface **45***d* toward the upper surface **45***c* of the upper lid wall part **45**. As shown in FIG. **8**, the lower surface groove **148** is formed in the upper lid wall part **45** except for the wall-surface overlapping portion in which the lower lid wall part **44** and the upper lid wall part **45** overlap each other. Specifically, the lower surface groove **148** is disposed around the bottom part **64** of the attaching member **61** disposed on the lower surface **45***d* of the upper lid wall part **45**, and is disposed inside the upper surface groove **149**.

The upper surface groove **149** is a rectangular and annular groove disposed outside the upper surface groove **149** and has a shape dented from the upper surface **45***c* toward the lower surface **45***d* of the upper lid wall part **45**. As shown in FIG. **8**, the upper surface groove **149** is formed on the lower lid wall part **44** except for the wall-surface overlapping portion in which the lower lid wall part **44** and the upper lid wall part **45** overlap each other. Specifically, the upper surface groove **149** is disposed around the base part **67** of the attaching member **61** disposed on the upper surface **45***c* of the upper lid wall part **45**, and is disposed outside the lower surface groove **148**. That is, in a cross section as viewed in the short direction Y of the exterior body **3**, the upper surface groove **149** is disposed on the side wall parts **42** and **43** side from the lower surface groove **148**.

Note that in the second embodiment of the present invention, description has been given on the case where the lower surface groove **148** and the upper surface groove **149** are

annular grooves surrounding the through-hole **147**, but they may be in another shape. For example, the lower surface groove **148** and the upper surface groove **149** may be linear grooves positioned to face each other over the through-hole **147**. The linear groove may extend in the longitudinal direction X or extend in the short direction Y. Moreover, the linear groove may be in a straight-line shape or in a curved-line shape. Furthermore, the lower surface groove **148** and the upper surface groove **419** may be T-shaped grooves along the shape of the through-hole **147** in a T shape.

Next, a method of forming an exterior-covered wire harness **1** by mounting the wire harness **2** on the exterior body **103** will be described.

In the method of mounting the exterior body **103** formed as described above on the wire harness **2**, first, the exterior body **103** is bent at bending portions **20***a* and **20***b* such that the side wall parts **42** and **43** become almost perpendicular to the bottom wall part **41**, the wire harness **2** is placed on the bottom wall part **41**, and the bending portion **20***c* is bent such that the lower lid wall part **44** becomes almost parallel to the bottom wall part **41**.

Thereafter, the bending portion **20***d* is bent such that the upper lid wall part **45** becomes almost parallel to the bottom wall part **41**, and in the wall-surface overlapping portion in which the lower lid wall part **44** and the upper lid wall part **45** overlap each other, the lower lid wall part **44** and the upper lid wall part **45** are joined, whereby the exterior body **103** is mounted on the outer periphery of the wire harness **2**.

After the exterior body **103** is mounted on the outer periphery of the wire harness **2**, the inner-side fixing part **164** of the attaching member **161** is inserted into the wide portion **147***c* of the through-hole **147**. Then, in a state where the upper lid wall part **45** is positioned between the inner-side fixing part **164** and the outer-side fixing part **165**, the connecting part **166** of the attaching member **161** is slid from the wide portion **147***c* to the narrow portion **147***a*. When the connecting part **166** is slid to the narrow portion **147***a*, the upper lid wall part **45** is interposed between the inner-side fixing part **164** and the outer-side fixing part **165**. Further, when the connecting part **166** is inserted into the narrow portion **147***a* of the through-hole **147**, the attaching member **161** is engaged with the exterior body **103**, whereby the exterior body **103** can be attached to a vehicle body.

The exterior body **103** and the exterior-covered wire harness **2** of the second embodiment of the present invention can achieve an effect similar to that of the exterior body **3** and the exterior-covered wire harness **1** of the first embodiment of the present invention.

While preferred embodiments of the present invention have been described above, the present invention is not limited to the exterior bodies **3** and **103** and the exterior-covered wire harness **1** according to the embodiments described above, and includes every aspect included in the spirit of the present invention and the scope of the claims. Also, respective configurations may be selectively combined as appropriate so as to achieve at least part of the object and effect described above. For example, shapes, materials, arrangement, size, and the like of the respective constituent elements in the embodiments described above can be changed as appropriate according to specific used aspects of the present invention. The configurations of the respective parts can be replaced with any configurations having similar functions.

While description has been given on the case where the lower surface groove **48**, **148**, in the embodiments of the present invention described above, is an annular groove surrounding the through-hole **47**, **147**, it may be formed as part of the periphery of the through-hole **47**,**147**. Further, while, in the embodiments of the present invention described above, description has been given on the case where the upper surface groove **49**, **149** is an annular groove surrounding the lower surface groove **48**, **148**, it may be formed as part of the periphery of the lower surface groove **48**, **148**.

Further, while description has been given on the case where the upper surface groove **49**, **149** is disposed outside the lower surface groove **48**, **148**, the lower surface groove **48**, **148** may be disposed outside the upper surface groove **49**, **149**.

Further, while description has been given on the case where the lower surface groove **48**, **148** and the upper surface groove **49**, **149** are formed on the upper lid wall part **45** in the embodiments of the present invention described above, only one of the lower surface groove **48**, **148** and the upper surface groove **49**, **149** may be formed.

Next, an exterior-covered wire harness according to an exemplary embodiment of the present invention will be described with reference to FIGS. **9** and **10**. An exterior-covered wire harness **300** according to an exemplary embodiment of the present invention includes a wire harness **310** in which a plurality of electric wires are bundled, and an exterior body (wire exterior body) **201** to be mounted on the outer periphery of the wire harness **310**. The wire exterior body **201** includes a plurality of wall parts **210** extending along the extending direction (longitudinal direction x in FIG. **9**) of the wire harness **310**, and an accommodating part **213** that is formed by being surrounded by the wall parts **210** and accommodates the wire harness **310**. In the exterior-covered wire harness **300**, corresponding to the fact that the wire harness **310** is routed by being bent along the extending direction (longitudinal direction x in FIG. **9**), the wire exterior body **201** has a bent portion **230** formed along the extending direction of the wire harness **310**. Note that in FIG. **9**, while the wire harness **310** is shown in one columnar shape, the wire harness **310** is formed of a plurality of electric wires that are bundled. Note that in the present specification, the longitudinal direction x is a direction along the extension of the wire harness **310**, that is, a direction along the extension of the wire exterior body **201**, and in the wire exterior body **201** in which the bent portion **230** is formed, it is a direction along the bent of the bent portion **230**.

Next, the wire exterior body **201** according to an exemplary embodiment of the present invention will be described. As shown in FIG. **9**, the wire exterior body **201** includes a plurality of wall parts **210** extending along the extending direction (longitudinal direction x in FIG. **9**) of the wire harness **310**. Each of the wall parts **210** has the bent portion **230** in the longitudinal direction x. The space formed by being surrounded by the wall parts **210** forms an accommodating part **213** in which the wire harness **310** is to be accommodated. The wire harness **310** is protected from the external environment by the wire exterior body **201**.

The wall parts **210** of the wire exterior body **201** are integrally formed of one resin sheet (for example, thermoplastic resin foamed sheet) that is bent. The resin sheet is bent at bending portions **220***a* to **220***d* to form the wall parts **210**. The wall parts **210** include a bottom wall part **221**, a side wall part **222** provided continuously from an edge of the bottom wall part **221** via the bending portion **220***a*, a side wall part **223** provided continuously from an edge of the bottom wall part **221** via the bending portion **220***b*, an inner lid wall part **224** provided continuously from the tip of the

side wall part **222** via the bending portion **220***c*, and an outer lid wall part **225** provided continuously from the tip of the side wall part **223** via the bending portion **220***d*. The outer lid wall part **225** is provided so as to be superposed on the inner lid wall part **224**. The bottom wall part **221** extends integrally from one end portion **232** to another end portion **233** of the wire exterior body **201** in the longitudinal direction x. That is, the bottom wall part **221** is provided over the bent portion **230** in the longitudinal direction x of the wire exterior body **201**.

As shown in FIG. **9**, the accommodating part **213** includes the bent portion **230** with a predetermined bent angle, corresponding to the wire harness **310** that is routed while being bent in the extending direction. The accommodating part **213** is a part surrounded by the bottom wall part **221**, the side wall parts **222** and **223**, the inner lid wall part **224**, and the outer lid wall part **225**. The accommodating part **213** is also formed in a cylindrical shape in which one side and another side facing the one side penetrate in the longitudinal direction x, by the bottom wall part **221**, the side wall part **222** and **223**, the inner lid wall part **224**, and the outer lid wall part **225**. A cross-sectional shape in the short direction y of the accommodating part **213** is an almost rectangular shape. Further, the cross-sectional area in the short direction y of the accommodating part **213** is almost the same anywhere in the longitudinal direction x. The wire exterior body **201** includes two linear portions via the bent portion **230** in the longitudinal direction x.

In the outer lid wall part **225** facing the bottom wall part **221**, a boundary portion **231** is formed by being divided between one end portion **232** and the bent portion **230** of the wire exterior body **201** in the longitudinal direction x. That is, the outer lid wall part **225** is separated into a first portion **225-1** and a second portion **225-2** with the boundary portion **231** being the boundary. Further, the first portion **225-1** and the second portion **225-2** are adjacent to each other with the boundary portion **231** being the boundary. The first portion **225-1** is a wall member provided over the bent portion **230** along the longitudinal direction x of the wire exterior body **201**. In the first portion **225-1**, one tip end portion thereof in the longitudinal direction x is positioned between the one end portion **232** in the longitudinal direction x and the bent portion **230** of the wire exterior body **201**. Accordingly, the tip end portion of the first portion **225-1** is positioned at the boundary portion **231**. The first portion **225-1** extends from another end portion **233** facing the one end portion **232** in the longitudinal direction x of the wire exterior body **201** up to the boundary portion **231**.

On the other hand, the second portion **225-2** of the outer lid wall part **225** extends from the one end portion **232** up to the boundary portion **231**.

In the wire exterior body **201**, bending of the bent portion **230** is formed at a predetermined angle toward a direction orthogonal to the longitudinal direction x in the linear portion of the outer lid wall part **225** and a width direction of the outer lid wall part **225** (that is, the short direction y in FIG. **9**). From the above description, even in the bottom wall part **221** disposed to face the outer lid wall part **225**, bending of the bent portion **230** is formed at a predetermined angle toward the short direction y. That is, the bent direction of the bent portion **230** with respect to the linear portion of the wire exterior body **201** is made toward the short direction y of the wall parts **210**.

As illustrated in FIGS. **9** and **10**, the inner lid wall part **224** is divided into the first portion **224-1** and the second portion **224-2** with the bent portion **230** being the boundary, in order to form the bent portion **230** in the wire exterior body **201**. The first portion **224-1** and the second portion **224-2** are adjacent to each other with the bent portion **230** being the boundary. In each of the first portion **224-1** and the second portion **224-2**, one tip end portion in the longitudinal direction x is positioned at the bent portion **230**. The first portion **224-1** extends from the other end portion **233** up to the bent portion **230**, and the second portion **224-2** extends from the one end portion **232** up to the bent portion **230**. Further, the inner lid wall part **224** extends almost parallel to the bottom wall part **221** from the side wall part **222** to the side wall part **223** or to the vicinity of the side wall part **223**.

As shown in FIG. **9**, in the first portion **225-1** of the outer lid wall part **225**, an area from the bent portion **230** to the tip end portion (boundary portion **231**) overlaps a partial area of the second portion **224-2** of the inner lid wall part **224** in a planar view to thereby form a wall-surface overlapping portion **235**. Moreover, in the wire exterior body **201**, in the wall-surface overlapping portion **235**, the first portion **225-1** of the outer lid wall part **225** is joined to the second portion **224-2** of the inner lid wall part **224**.

In the wire exterior body **201**, the first portion **225-1** of the outer lid wall part **225** is joined to the second portion **224-2** of the inner lid wall part **224** in the boundary portion **231**. When the first portion **225-1** of the outer lid wall part **225** is joined to the second portion **224-2** of the inner lid wall part **224** in the boundary portion **231**, the first portion **225-1** and the second portion **225-2** of the outer lid wall part **225** and the second portion **224-2** of the inner lid wall part **224** can be joined together in one step, whereby efficiency of the joining work is improved.

A joining means between the first portion **225-1** of the outer lid wall part **225** and the second portion **224-2** of the inner lid wall part **224** is not limited particularly, and may include, for example, a welding means such as ultrasonic welding and heat welding, an adhering means such as an adhesive and an adhesive tape, a fitting means using a locking member, a rivet, and the like, a penetration fixing means using a stapler or the like, or the like. In the wire exterior body **201**, since a joint portion **240** is formed using ultrasonic welding as a joining means, the first portion **225-1** of the outer lid wall part **225** is joined and fixed to the second portion **224-2** of the inner lid wall part **224**.

Since the first portion **225-1** of the outer lid wall part **225** is fixed to the second portion **224-2** of the inner lid wall part **224**, the first portion **225-1** of the outer lid wall part **225** is integrated with the second portion **224-2** of the inner lid wall part **224** via the wall-surface overlapping portion **235**. The area of the wall-surface overlapping portion **235** in a planar view is not particularly limited, and is selectable as appropriate within a range that the first portion **225-1** of the outer lid wall part **225** and the second portion **224-2** of the inner lid wall part **224** can be fixed.

In the wire exterior body **201**, the first portion **225-1** of the outer lid wall part **225** extending from the other end portion **233** is integrated with the second portion **224-2** of the inner lid wall part **224** extending from the one end portion **232**, which can give excellent mechanical strength even in the bent portion **230**. Accordingly, the wire exterior body **201** has an excellent protective function with respect to the wire harness **310**. Moreover, the wire exterior body **201** having excellent workability for attaching the exterior-covered wire harness **300** to a vehicle body panel or the like can be obtained. Furthermore, since the bent portion **230** also has an excellent mechanical strength, even if the exterior-covered wire harness **300** is attached to a vehicle such as an automobile in which vibration is likely to be generated, it is possible to prevent vibration sound from being generated

from the exterior-covered wire harness **300**. Further, since the mechanical strength of the bent portion **230** is increased, durability of the bent portion **230** is improved.

A resin sheet to be used for the wire exterior body **201** is not particularly limited if it can be bent. As a resin type, either thermoplastic resin or thermosetting resin can be used. Among them, a thermoplastic resin foamed sheet is preferable from the viewpoint of light weight, freedom in shape design, cost, and the like. The resin type of the thermoplastic resin foamed sheet is not particularly limited, and includes, for example, polyethylene resin, polypropylene resin, polycarbonate resin, polyethylene terephthalate resin, polybutylene terephthalate resin, polyamide resin, polyphenylene sulfide resin, polystyrene resin, polyvinyl chloride resin, polyvinyl acetate resin, polytetrafluoroethylene resin, acrylic resin, or the like.

The density of the thermoplastic resin foamed sheet to be used for the wire exterior body **201** is not particularly limited. For example, from the viewpoint of improving the balance between light weight and mechanical strength, it is preferable that the density is 200 Kg/m^3 or more and 700 Kg/m^3 or less, and it is more preferable that the density is 300 Kg/m^3 or more and 600 Kg/m^3 or less, and it is particularly preferable that the density is 350 Kg/m^3 or more and 550 Kg/m^3 or less. Note that the density of the thermoplastic resin foamed sheet is measured on the basis of JIS K 7222.

The thickness of the thermoplastic resin foamed sheet is not particularly limited. From the viewpoint of bending easiness and mechanical strength, it is preferable that the thickness is 0.50 mm or more and 4.0 mm or less, and it is more preferable that the thickness is 0.8 mm or more and 3.0 mm or less.

The bending portions **220***a* to **220***d* may be extrusion-molded portions that are formed by extrusion molding performed on a flat thermoplastic resin foamed sheet so as to be in a shape easy for bending formation. Since the bending portions **220***a* to **220***d* are formed as extrusion-molded portions, bending processing can be performed smoothly, and accuracy of the bending positions can be improved.

In the thermoplastic resin foamed sheet, when the bending portions **220***a* to **220***d* are extrusion-molded portions, the density of the thermoplastic resin foamed sheet is higher than the wall parts **210** that are portions other than the bending portions **220***a* to **220***d*. The density of the thermoplastic resin foamed sheet in the bending portions **220***a* to **220***d* is not particularly limited. From the viewpoint of obtaining bending property of the bending portions **220***a* to **220***d* while stably maintaining the shape of the wire exterior body **201**, it is preferable that the density is 400 Kg/m^3 or more and 1200 Kg/m^3 or less, and it is particular preferable that the density is 500 Kg/m^3 or more and 1200 Kg/m^3 or less. Note that the density of the bending portions **220***a* to **220***d* of the thermoplastic resin foamed sheet is measured on the basis of JIS K 7222, by returning the bent thermoplastic resin foamed sheet into flat and cutting off a width of 1 mm on the both sides from the bending portions **220***a* to **220***d*.

Note that the bending portions **220***a* to **220***d* may be in a shape easy for bending formation by forming a half-cut portions, a cut portion in a broken line shape, or the like, instead of an extrusion-molded portion.

Further, in the thermoplastic resin foamed sheet, a non-foam layer may be formed on both surfaces or either surface. That is, the thermoplastic resin foamed sheet may be formed to include a foam layer and a non-foam layer formed on the foam layer. When a non-foam layer is formed on a surface of the thermoplastic resin foamed sheet, the mechanical strength of the wire exterior body **201** is enhanced, and the protective performance for the wire harness **310** to be accommodated is improved. From the viewpoint of reliably enhancing the mechanical strength of the wire exterior body **201**, it is preferable to form non-foam layers on both surfaces. The thickness of the non-form layer is not particularly limited and, for example, the thickness may be 10 μm or more and 100 μm or less.

The Shore hardness (HSC) of the thermoplastic resin foamed sheet is not particularly limited, but it is preferable that HSC is 60 or more and 100 or less from the viewpoint of mechanical strength.

Next, each of a method of forming the wire exterior body **201** described above and a method of forming the exterior-covered wire harness **300** by mounting the wire harness **310** on the wire exterior body **201** will be described. In the method of forming the wire exterior body **201**, first, stamping is performed to stamp out a portion corresponding to the wire exterior body **201** from a thermoplastic resin foamed sheet serving as a base material for forming the wire exterior body **201**. By the stamping being performed, a thermoplastic resin foamed sheet having the shape shown in FIG. **10** can be obtained. As stamping, for example, stamping using a Thomson blade mold can be considered from the viewpoint of cost reduction and easy processing. Note that when stamping using a Thomson blade is performed, by setting the shape of the blade appropriately, it is possible to form a curved portion having R 0.1 mm or larger and 1.0 mm or smaller on the cut surface of the thermoplastic resin foamed sheet. When the curved portion is formed, it is possible to prevent the wire harness **310** from being damaged by a contact of the wire harness **310** with an end portion of the thermoplastic resin foamed sheet.

In the method of mounting the wire exterior body **201**, formed as described above, on the wire harness **310**, first, the resin sheet cut out of the base material shown in FIG. **11**A is bent at the bending portions **220***a* and **220***b* such that the side wall parts **222** and **223** become almost perpendicular to the bottom wall part **221**. When the resin sheet is bent at the bending portions **220***a* and **220***b*, the space between the tip end portion sides of the side wall parts **222** and **223** opens upward along the longitudinal direction x.

After the resin sheet is bent at the bending portions **220***a* and **220***b* and the wire harness (not shown in FIG. **11**A, FIG. **11**B, FIG. **11**C) is placed on the bottom wall part **221**, as shown in FIG. **11**B, the first portion **224-1** and the second portion **224-2** of the inner lid wall part **224** are bent at the bending portion **220***c* such that the first portion **224-1** and the second portion **224-2** of the inner lid wall part **224** become almost parallel to the bottom wall part **221**. Thereafter, the first portion **225-1** of the outer lid wall part **225** is bent at the bending portion **220***d* such that the first portion **225-1** of the outer lid wall part **225** becomes almost parallel to the bottom wall part **221**. When the first portion **225-1** of the outer lid wall part **225** is bent at the bending portion **220***d*, the area from the bent portion **230** to the boundary portion **231**, in the first portion **225-1** of the outer lid wall part **225**, overlaps a partial area of the second portion **224-2** of the inner lid wall part **224**, whereby the wall-surface overlapping portion **235** is formed.

Thereafter, as shown in FIG. **11**C, the second portion **225-2** of the outer lid wall part **225** is bent at the bending portion **220***d* such that the second portion **225-2** of the outer lid wall part **225** becomes almost parallel to the bottom wall part **221**. When the second portion **225-2** of the outer lid wall part **225** is bent at the bending portion **220***d*, it is divided

between the one end portion **232** in the longitudinal direction x of the wire exterior body **201** and the bent portion **230** to thereby form the outer lid wall part **225** in which the boundary portion **231** is formed. That is, when the outer lid wall part **225** is bent at the bending portion **220***d*, the opening between the tip end portions of the side wall parts **222** and **223** is closed to form the accommodating part, and the wire harness is accommodated in the accommodating part in an inserted state.

Thereafter, by performing ultrasonic welding or the like on the boundary portion **231**, the first portion **225-1** and the second portion **225-2** of the outer lid wall part **225** and the second portion **224-2** of the inner lid wall part **224** are joined to form the joint portion **240**. Further, when the outer lid wall part **225** and the inner lid wall part **224** are joined at an appropriate position other than the boundary portion **231** to form the joint portion **240**, a state where the opening between the tip end portions of the side wall parts **222** and **223** is closed is fixed, and the wire exterior body **201** is mounted on the outer periphery of the wire harness.

Next, another exemplary embodiment of the present invention will be described. In the exemplary embodiment described above, each of a plurality of wall parts has a bent portion in the extending direction of the wire harness. Instead, the wall parts may include a branch portion in the extending direction of the wire harness, or may include both a bent portion and a branch portion. That is, when the first portion of the outer lid wall part is positioned at the branch portion, mechanical strength in the branch portion is improved. Furthermore, the diameter of the accommodating part may be increased or decreased so as to go along the shape of the wire harness.

INDUSTRIAL APPLICABILITY

In the present invention, excellent mechanical strength is achieved even in a branch portion and/or a bent portion, and an excellent protective function is achieved with respect to electric wires. Therefore, the present invention has high utility value in the field of exterior body of a wire harness to be routed in a vehicle and required various shapes, for example.

LIST OF REFERENCE SIGNS

1, **101** exterior-covered wire harness
2 wire harness
3, **103**, **201** exterior body
4, **210** wall part
5, **213** accommodating part
20*a*, **20***b*, **20***c*, **20***d* bending portion
41 bottom wall part
42, **43** side wall part
44 lower lid wall part
44*a* edge
45 upper lid wall part
45*a* edge
47, **147** through-hole
48, **148** lower surface groove
49, **149** upper surface groove
61, **161** attaching member
62 exterior body-side engagement portion
63, **163** vehicle body-side engagement portion
64 bottom part
65 erecting part
66 insertion hole
67 base part
68, **168** pillar
69, **169** wing part
70 insertion part
147*a* narrow portion
147*c* wide portion
162 exterior body-side locking part
164 inner-side fixing part
165 outer-side fixing part
166 connecting part
224 inner lid wall part
224-1 first portion
224-2 second portion
225 outer lid wall part
225-1 first portion
225-2 second portion
230 bent portion
235 wall-surface overlapping portion
X longitudinal direction
Y short direction

The invention claimed is:

1. A wire exterior body to be mounted on an outer periphery of an electric wire, the wire exterior body being formed of a resin sheet that is bent, the wire exterior body comprising

a plurality of wall parts extending along an extending direction of the electric wire, the plurality of the wall parts forming an accommodating part that accommodates the electric wire, wherein

among the plurality of the wall parts, at least one wall part has a through-hole, penetrating in a thickness direction of the resin sheet, into which an attaching member attachable to a vehicle body is inserted, and a groove in which a thickness of the resin sheet is reduced is formed on a part around the through-hole on at least one surface of an upper surface and a lower surface facing the thickness direction.

2. The wire exterior body according to claim **1**, wherein the groove is formed at positions facing each other over the through-hole.

3. The wire exterior body according to claim **1**, wherein the groove is an annular groove surrounding the through-hole.

4. The wire exterior body according to claim **1**, wherein a width of the groove is 0.7 mm or more and 0.9 mm or less.

5. The wire exterior body according to claim **1**, wherein a depth of the groove is 60% or more and 80% or less of the thickness of the resin sheet.

6. The wire exterior body according to claim **1**, wherein a density of the resin sheet in the groove is higher than a density of the resin sheet except for the groove in the upper surface and the lower surface facing the thickness direction, and is 400 Kg/m^3 or more and 1200 Kg/m^3 or less.

7. An exterior-covered wire harness comprising:

a wire harness; and

the wire exterior body according to claim **1**, wherein

the wire exterior body is mounted on an outer periphery of the wire harness.

8. A wire exterior body to be mounted on an outer periphery of an electric wire, the wire exterior body being formed of a resin sheet that is bent, the wire exterior body comprising

a plurality of wall parts extending along an extending direction of the electric wire, the plurality of the wall parts forming an accommodating part that accommodates the electric wire, wherein

the plurality of the wall parts includes a branch portion and/or a bent portion in the extending direction of the electric wire, and among the plurality of the wall parts, two wall parts facing each other over the accommodating part are provided across the branch portion and/or bent portion along the extending direction of the electric wire.

9. The wire exterior body according to claim **8**, wherein branching of the branch portion and/or bending of the bent portion is formed toward a short direction of the two wall parts facing each other.

10. The wire exterior body according to claim **8**, wherein one wall part forming the two wall parts facing each other is joined to at least one of the plurality of the wall parts in a direction extending from the branch portion and/or bent portion.

11. The wire exterior body according to claim **8**, wherein at least a partial area of one wall part forming the two wall parts facing each other includes a wall-surface overlapping portion that overlaps at least one of the plurality of the wall parts, and in the wall-surface overlapping portion, the one wall part is joined to at least one of the plurality of the wall parts.

12. The wire exterior body according to claim **11**, wherein the one wall part is divided in the wall-surface overlapping portion to form a boundary portion, and the one wall part is joined to at least one of the plurality of the wall parts in the boundary portion.

13. The wire exterior body according to claim **8**, wherein the resin sheet is a thermoplastic resin foamed sheet.

14. The wire exterior body according to claim **13**, wherein a density of the thermoplastic resin foamed sheet except for a bending portion is 200 Kg/m^3 or more and 700 Kg/m^3 or less.

15. The wire exterior body according to claim **13**, wherein a thickness of the thermoplastic resin foamed sheet except for a bending portion is 0.50 mm or more and 4.0 mm or less.

16. The wire exterior body according to claim **13**, wherein a density of a bending portion of the thermoplastic resin foamed sheet is 400 Kg/m^3 or more and 1200 Kg/m^3 or less.

17. The wire exterior body according to claim **13**, wherein the thermoplastic resin foamed sheet includes a curved portion having R 0.1 mm or more and 1.0 mm or less in a cut surface.

18. The wire exterior body according to claim **13**, wherein the thermoplastic resin foamed sheet includes a non-foam layer on both surfaces.

19. The wire exterior body according to claim **18**, wherein a thickness of the non-foam layer is 10 μm or more and 100 μm or less.

20. The wire exterior body according to any one of claim **13**, wherein

Shore hardness (HSC) of the thermoplastic resin foamed sheet is 60 or more and 100 or less.

21. An exterior-covered wire harness comprising:

a wire harness; and

the wire exterior body according to claim **8**, wherein

the wire exterior body is mounted on an outer periphery of the wire harness.

* * * * *