Oct. 19, 1954 W. C. BROEKHUYSEN 2,692,140

CONTROL FOR BOWLING PIN SETTING MACHINES

Filed Aug. 16, 1947 4 Sheets-Sheet 1

FIG. 1

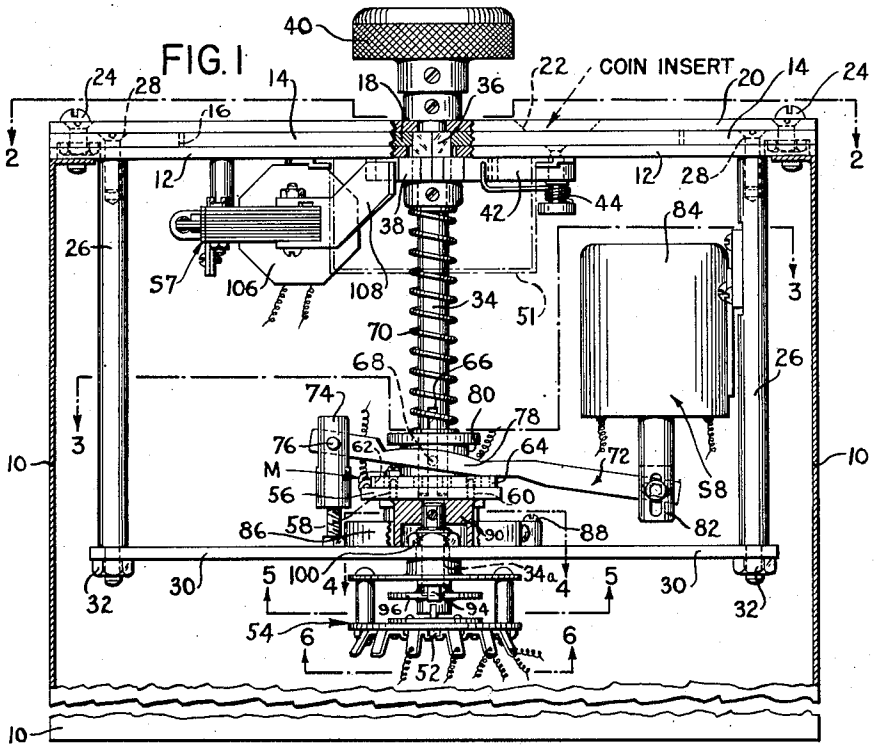

FIG. 2

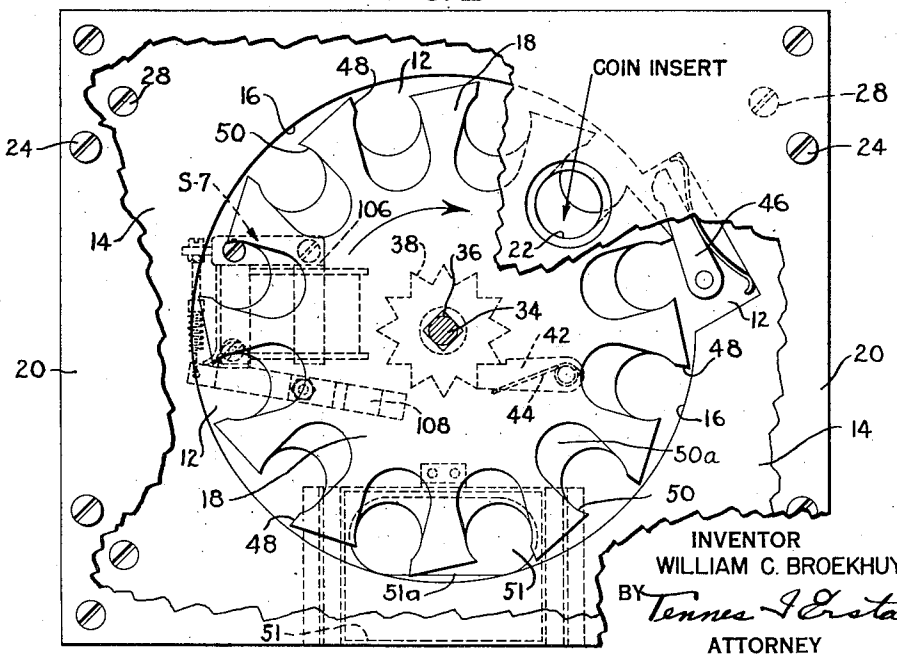

Oct. 19, 1954 W. C. BROEKHUYSEN 2,692,140

CONTROL FOR BOWLING PIN SETTING MACHINES

Filed Aug. 16, 1947 4 Sheets-Sheet 2

FIG. 3

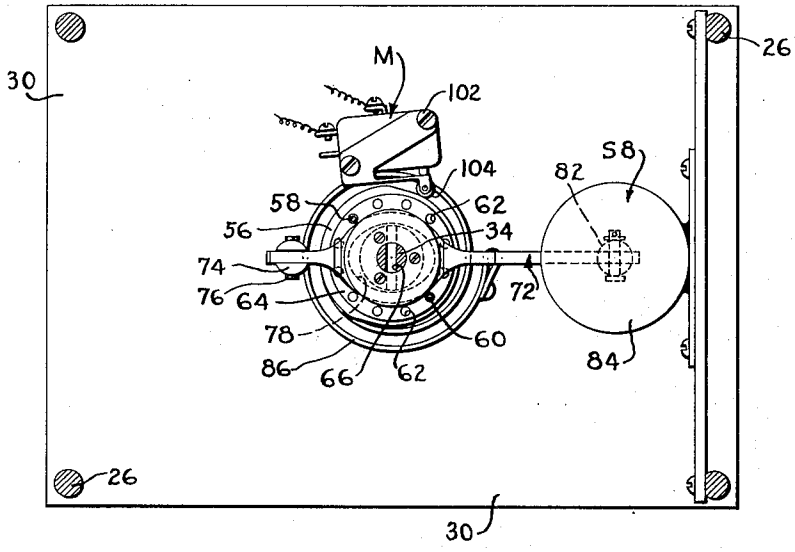

FIG. 4

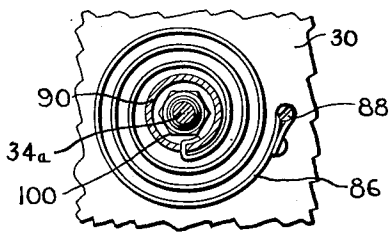

FIG. 5

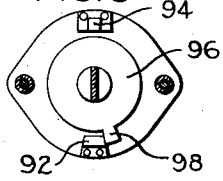

FIG. 7

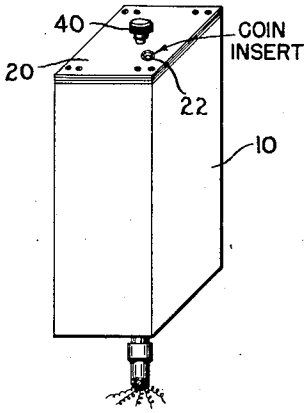

FIG. 6

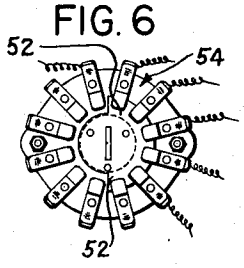

INVENTOR
WILLIAM C. BROEKHUYSEN.
BY Tennes I Erstad
ATTORNEY

Oct. 19, 1954 W. C. BROEKHUYSEN 2,692,140

CONTROL FOR BOWLING PIN SETTING MACHINES

Filed Aug. 16, 1947 4 Sheets-Sheet 3

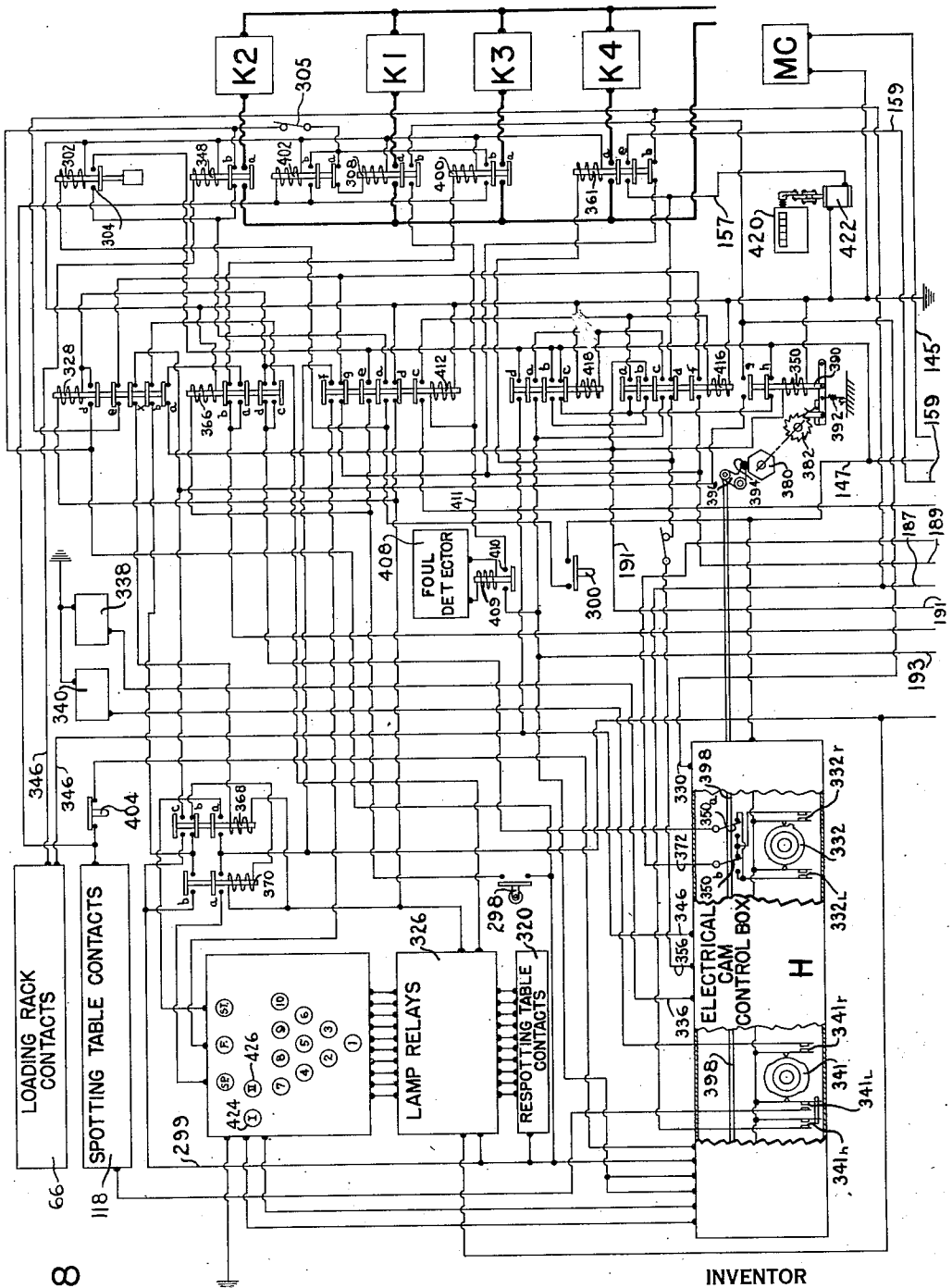

FIG. 8

INVENTOR
WILLIAM C. BROEKHUYSEN.
BY Tennes J. Erstad
ATTORNEY

Oct. 19, 1954 W. C. BROEKHUYSEN 2,692,140

CONTROL FOR BOWLING PIN SETTING MACHINES

Filed Aug. 16, 1947 4 Sheets-Sheet 4

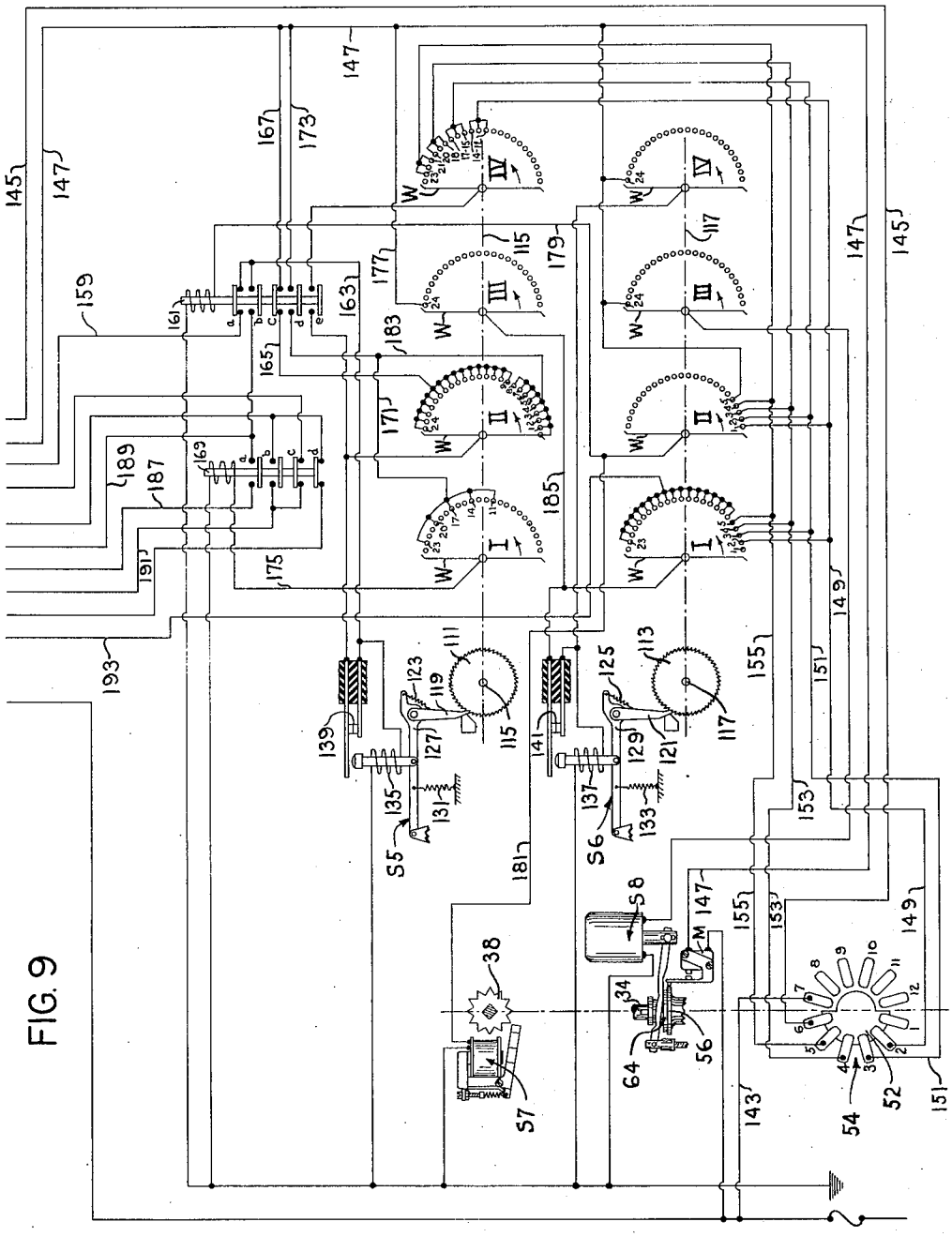

FIG. 9

INVENTOR
WILLIAM C. BROEKHUYSEN.
BY Tennes Ekstad
ATTORNEY

Patented Oct. 19, 1954

2,692,140

UNITED STATES PATENT OFFICE

2,692,140

CONTROL FOR BOWLING PIN SETTING MACHINES

William C. Broekhuysen, Garden City, N. Y., assignor to American Machine & Foundry Company, a corporation of New Jersey

Application August 16, 1947, Serial No. 768,947

16 Claims. (Cl. 273—43)

1

This invention relates to automatic bowling pin setting machines and, more particularly, to a control for setting and starting an automatic pin setting machine for a predetermined number of players for one game and automatically shutting it off when the game has been completed.

When an automatic pin setting machine is employed on a bowling alley, some provision has to be made to see that players receive the number of frames to which they are entitled, after which the machine is shut off. If this is done by attendants, it is costly which, of course, adds to the cost of the game. By using my invention, such close supervision is not necessary because the machine is controlled automatically.

In the game of bowling the players on two opposing teams usually alternate for each frame between two adjoining alleys. The number of players on a team may also vary from game to game and the number of balls each player is entitled to receive in any game varies depending upon his play in the last frame of the game. My invention not only provides for these various factors, but is also tied in with the control system of an automatic pin setting machine so that it will start the machine, allow each player the number of balls to which he is entitled, then clear the alley, and set up ten new pins and then shut off the machine.

My invention is also adapted for use either as a coin operated device whereby players may deposit coins directly in the coin box to set the machine for a fixed number of players or as a control which can be manually set by the manager of the bowling alley.

An advantage of my game control is that it may be used with automatic pin setting and ball return machines where two opposing teams of players play on two separate alleys and alternate between the two alleys for each succeeding frame.

Another advantage of my invention is that it operates equally well where the teams do not alternate between the alleys but instead play all their frames on the same alley.

Another advantage of my control device is that it starts the pin setting machine and counts the number of frames played by the players on a team and, in the tenth frame, automatically allows each player of the team who makes a strike to throw two extra balls and allows each player of the team who makes a spare in the tenth frame to throw one additional ball. After all the players have thrown all the balls to which they are entitled, my device automatically causes the machine to clear the alley and to set up ten new pins, and then it shuts off the machine.

Another advantage of my device is that, if the player steps over the foul line, he is automatically notified that he has transgressed beyond the foul line and, if he steps back of the foul line without

2

throwing the ball, the foul warning will be automatically cancelled after a predetermined period of time has elapsed (for example ten seconds). If, on the other hand, the player has transgressed beyond the foul line and has thrown the ball, the foul impulse will not be cancelled and the foul will be registered against the player.

Another advantage of my device is that it will be unnecessary to have attendants present to oversee and supervise the bowling of various teams to see that they do not play more frames than they are entitled to.

Another advantage of my invention is that it causes the bowling machine to operate and clear the alley and set ten new pins each time a player has thrown the last ball to which he is entitled in the game.

A further object is to provide apparatus for accomplishing the foregoing objectives which will be reliable and accurate in operation.

Another advantage of my invention is that it allows additional players to enter a game after it has started at any time up to the tenth frame.

Other objects and features of the invention will appear as the description of the particular physical embodiment selected to illustrate the invention progresses. In the accompanying drawings, which form a part of this specification, like characters of reference have been applied to corresponding parts throughout the several views which make up the drawings.

Fig. 1 is a top sectional plan view showing the game control;

Fig. 2 is a front sectional elevation showing the control mechanism;

Fig. 3 is a sectional view taken on line 3—3 of Fig. 1;

Fig. 4 is a sectional end elevation taken on the line 4—4 of Fig. 1;

Fig. 5 is a sectional end elevation taken on the line 5—5 of Fig. 1;

Fig. 6 is a sectional end elevation taken on the line 6—6 of Fig. 1;

Fig. 7 is a perspective assembled view showing the game control encased in its outer covering; and

Fig. 8 and Fig. 9 when joined together, constitute a circuit diagram for starting a bowling machine, counting frames and shutting off the machine.

I. PRINCIPLES OF THE GAME OF BOWLING

My invention is designed to meet the conditions of a game of bowling. In a game of ten pins, a game customarily consists of ten frames and each player is allowed to throw two balls in each frame.

When a player knocks down all ten pins with the first ball it is known as a "strike" and when he succeeds in knocking down all pins with two balls in a frame it is known as a "spare."

In the tenth frame it is customary to allow a player to throw two additional balls when he makes a strike and one additional ball when he makes a spare. Accordingly my device is designed to allow each player such additional balls to which he is entitled before shutting off the automatic pin setting machine.

While the foregoing description briefly outlines the principal features of the game of tenpins, various modifications of these features may be made, such as changing the number of frames for a game, changing the number of balls allowed, allowing different numbers of extra balls to be thrown in the event a spare or strike is made, changing the number of pins, etc. Whenever such changes in the rules are made, corresponding changes may be made in the apparatus hereinafter described to correspond to any such changes in the rules. My invention is, therefore, equally adapted for use with a game of duckpins, candlepins, kingpins or any other variation of the game of bowling.

II. AUTOMATIC MECHANISM FOR SPOTTING AND RESPOTTING PINS

Various devices have been developed to spot and respot bowling pins by automatic apparatus instead of by hand. My invention is adapted for use with such automatic pin spotters. My copending application, S. N. 627,605, filed November 9, 1945, which has now matured into U. S. Patent 2,559,274 granted July 3, 1951, shows one type of automatic pin spotting machine with which my invention can be advantageously employed.

The mechanical apparatus shown in that application employs a platform which is adapted to move toward and away from the bed of a bowling alley to either spot or respot bowling pins on a bowling alley.

Mechanical means are provided for returning the bowling ball to the player along a runway and for elevating the fallen pins and placing them in a magazine from which they are eventually delivered to the spotting platform.

It should be understood that, while I have referred to the type of mechanical apparatus shown and described in my former copending application, Serial No. 627,605, filed November 9, 1945, now U. S. Patent 2,559,274, other mechanical structures can also be advantageously employed with my game control.

III. SEQUENCE CONTROL FOR AUTOMATIC PIN SPOTTING AND RESPOTTING MACHINES

For purposes of illustration, I will show how my game control can be employed with the sequence control shown in my copending application, referred to above, to operate a pin spotting machine in a certain predetermined sequence, depending upon whether the first or second ball has been thrown or upon whether a strike, a spare or a foul has been made.

For example, if a strike is made, the bowling pin setting mechanism will be put through a series of operations which will remove all fallen pins and reset a new set of pins on the bowling alley. If a foul is made on the first ball, all of the pins will similarly be removed and a new set of pins will be placed on the bowling alley. If a first ball has been thrown and there is no strike or foul, the machine will remove any pins that have fallen and will return the bowling ball to the player so that he can throw his second ball. For further details as to how the sequence control operates, reference may be made to my copending application, Serial No. 627,605.

IV. CONTROL FOR STARTING PIN SETTING MACHINE, COUNTING FRAMES AND SHUTTING OFF PIN SETTING MACHINE AFTER A GAME HAS BEEN COMPLETED

My game control is constructed to operate satisfactorily regardless of whether the players of two opposing teams use two alleys or one alley. It is also adapted to operate equally well in the case where two alleys are employed and the players of each team alternate between alleys in playing successive frames or where the players on each team play all their frames on the same alley.

In any of the cases mentioned after each player has played ten frames and has received all the extra balls to which he is entitled as a result of making a strike or a spare in the tenth frame, my control actuates the machine to clear the alley and set up a new set of pins for the next player. When all the players have completed ten frames each, together with such extra balls to which they are entitled, my control causes the alley to be cleared and a new set of pins to be set up, and it then shuts off the machine.

My frame counting and bowling machine control apparatus may be set manually by the manager of a bowling alley for a predetermined number of frames for a team and, after it has allowed each player any additional balls to which he is entitled in the tenth frame, it will automatically shut off the machine. My bowling machine control apparatus may also be used with a coin operated mechanism so that attendants and supervisors for a game of bowling may be dispensed with and each team can proceed to play immediately by inserting the required number of coins into a suitable coin control box.

1. *Description—coin box*

In Fig. 1, I have shown one type of coin box or receiver which can be used with my bowling machine control apparatus. This coin receiver consists of a housing **10** having an end plate **12** connected thereto at one end. Secured to the end plate **12** is a plate **14** having circular hole **16** in which a coin wheel **18** is mounted for rotary movement. A cover plate **20**, having a coin insert opening **22** formed therein, is secured to the box **10** by means of suitable screws **24**. Fixedly secured to plate **14** are four supporting studs **26** (only two shown in Fig. 1) which are held securely by means of screws **28**. Secured to the opposite ends of the four supporting studs **26**, by means of nuts **32**, is a supporting plate **30**.

The opening **22** in plate **20** is not located directly over opening **50** in coin wheel **18**, but each opening **50** has a shelf **50***a* which extends underneath opening **22**. When the coin is inserted, it must be slid underneath plate **20** into opening **50**. This arrangement prevents tampering that might be possible if opening **22** were located directly over opening **50**.

A shaft **34** passes through and is rotatably mounted in a suitable hole formed in the cover plate **20**. Part of the shaft **34** has a square portion **36**, on which is fixedly mounted the coin wheel **18** and the ratchet wheel **38**. A knob **40** is also fixedly mounted on the shaft **34** to manually rotate the shaft.

Coacting with the ratchet wheel **38** is a dead pawl **42** held in resilient engagement with the teeth of the ratchet wheel **38** by means of a

spring 44. The dead pawl prevents the ratchet wheel 38 and the shaft 34 from rotating counterclockwise. A second spring tensioned pawl 46 engages with the cuts 48 of the coin wheel 18 and thereby prevents clockwise rotation of the wheel 18 unless coins have been inserted in one or more of the evenly spaced holes 50 of the coin wheel 18.

When coins have been placed in the holes 50, they will engage the pawl 46 and thereby effect a camming action with the pawl 46 to move it out of engagement with the engaging cuts 48. This permits clockwise rotation of the coin wheel 18 corresponding to the number of coins which have been inserted in the holes 50. A coin box 51 is provided for receiving coins which have been deposited through coin insert slot 22 into the holes 50 of the coin wheel 18. The rotation of the coin wheel 18 conveys the coins to an opening 51a formed in plate 12 where they fall into the box 51. By rendering the pawl 46 inoperative, the manager of a bowling alley can use the same apparatus as a manual control he sets himself without the use of the coins.

The contact segment 52 of selector switch 54 (Fig. 6) is fixedly connected to a second shaft 34A which is rotatably mounted in a suitable sleeve passing through a hole formed in supporting plate 30. The selector switch 54 (shown in Figs. 6 and 9) has twelve contact points which correspond to the coin holes 50 of the coin wheel 18 when the clutch members 56 and 64 are engaged. The contact segment 52 has a contact portion which is adapted to engage with six of the adjoining evenly spaced contact points of the selector switch 54 at any one time. The contact segment 52 is shown in its off position in Figs. 6 and 9.

When a coin is inserted through the coin insert slot 22 into the first hole 50 of the coin wheel 18 (Figs. 1 and 2), the knob 40 can be rotated one notch clockwise to the next position. This will cause the contact segment 52 of the selector switch 54 to rotate to the next position where the contact segment 52 will be in contact with contact points 2–7 (Fig. 9) of the selector switch 54.

Fixedly mounted on the shaft 34A is a cam 56. The cam 56 carries two pins 58 and 60 which are adapted to slide into corresponding holes 62 formed in a sliding clutch plate 64. The clutch plate 64 is mounted on the shaft 34 and is capable of being longitudinally moved with respect to the shaft 34. The shaft 34 has a slot 66 formed in one end and over which the clutch plate 64 slides. A pin 68 is fixedly mounted in the clutch plate 64 and projects through the slots 66 of shaft 34 (Fig. 1). The clutch plate 64, therefore, will be rotated positively each time the shaft 34 is rotated but is capable of being moved longitudinally with respect to the shaft 34 because of the slot 66 and pin 68 arrangement.

A coil spring 70, mounted on the shaft 34 (Fig. 1) acts to exert pressure on the clutch plate 64 at all times to hold the pins 58 and 60 in the holes 62 of the clutch plate. It will, therefore, be evident that when the pins 58 and 60 are in engagement with the holes 62, cam 56 and contact segment 52, both of which are fixedly connected to shaft 34A, will be rotated whenever the knob 40 is turned by hand.

A lever 72 is pivotally connected to the stud 74 by means of a pin 76. A portion of the lever 72 has a yoke 78 which fits around a grooved collar 80 formed on the clutch plate 64 for disengaging the clutch plate 64 from the pins 58 and 60 of cam 56. Actuating movement is imparted to the free end of lever 72 by means of a plunger 82 of solenoid 84. When the solenoid is energized, it pulls in the plunger 82 and, when the plunger 82 is pulled in, it causes the clutch plate 64 to be disengaged from the cam 56. When the solenoid 84 is deenergized, the spring 70 pushes the clutch plate 64 back into engagement with the cam disc 56.

A clock spring 86 (Figs. 1, 3 and 4) is fixedly connected at one end to an anchor bolt 88 screwed into the supporting plate 30. The opposite end of the spring 86 is connected to a slot formed in a hub 90 of cam 56. When the shaft 34A is rotated through the movement of knob 40, the clutch plate 64 and the cam disc 56 cause the clock spring 86 to be wound up. When the clutch plate 64 is disengaged, through the energization of solenoid 84 in the manner described, the wound-up spring 86 will turn the shaft 34A, the cam 56 and the contact segment 52 back to their starting position. A slight initial tension is wound into the spring 86 when it is connected which will be adequate to pull the shaft 34A back to the limit of its starting position as determined by the lug 98 engaging with the stop 92 as shown in Fig. 5.

The distance the shaft 34A can move clockwise and counter-clockwise is controlled by two stops 92 and 94 which are fixedly connected to the stationary part of the selector switch 54. A disc 96, which is fixedly mounted on the shaft 34A, has a projecting lug 98 which engages with the stops 92 and 94 to limit the distance the shaft 34A can travel in either direction.

The selector switch 54 is fixedly connected to the supporting plate 30 by means of a suitable clamping nut 100 which screws on to a threaded sleeve which projects from the stationary part of the selector switch 54 to clamp the stationary part of the selector switch against the supporting plate 30 as shown in Fig. 1. A small conventional cam actuated switch M, commonly referred to as a Microswitch, is fixedly secured to the supporting plate 30 by suitable screws 102. The switch M has a cam follower 104 which rides against the cam 56. It will be noted in Fig. 3 (off position) that the cam disc 56 has a contour which will cause the switch M to be closed as soon as the shaft 34A is rotated and the switch M will remain closed until such time as the clutch 64 is released by solenoid S–3 allowing the shaft 34A to be returned to its starting position by spring 86.

A lock-in relay 106 is fixedly connected to the end plate 12 and has an arm 108 which engages with the teeth of the ratchet wheel 38 to lock the shaft 34 against rotary movement (Figs. 1 and 2).

2. *Description—connections between game control and sequence control*

For purposes of illustrating how my bowling game control apparatus operates, I have shown how it can be tied in with the electric wiring diagram shown in Fig. 4 of my copending sequence control application, Serial No. 627,605. I have used the same identifying numerals in Fig. 8 as I used in Fig. 4 of my copending application S. N. 627,605 because the parts operate in the same way except for a few changes which I will point out and describe.

The contacts of the no pin relay 328 were changed and it now has one normally open contact 328d and four normally closed contacts 328e,

328x, 328b and 328a (Fig. 8). Contact 328b is in series with spare lamp relay 370 and contact 328a is in series with the ratchet relay 350. Relays 370 and 350 are controlled by the two sides of electrical control cam 332. The normally open contact 328d acts as lock-in contact for relay 328 and is connected in multiple with the ten 326c contacts of lamp relays 326. The normally closed contact 328x is connected in series with the strike lamp relay 366. Normally closed contact 328e is connected in series with an added third contact 341h of cam 341 (Fig. 8).

A normally closed contact 366d was added to off center relay 366 (Fig. 8) for the purpose of energizing no pin relay 328 from cam 332 under special circumstances arising on the last ball which will be more fully explained later.

Normally closed contact 361b and normally open contact 361e were added to the table turning and pin distributing actuating cam clutch relay 361.

A normally closed contact 412g was added to the relay 412. Normally open contact 416f was added to relay 416.

A new normally open contact 308b was substituted for 412b in the lock in circuit of relay 412 to cancel a foul if no foul was in fact committed by the player. This will be more fully explained later.

A motor control unit MC, Fig. 8, was added through which the machine is started and stopped.

It will, therefore, be evident, as indicated above, that the circuit diagram shown in Fig. 8, except for the few changes just mentioned, is substantially the same as the circuit wiring diagram shown in Fig. 4 of my former application S. N. 627,605.

The wiring diagram shown in Fig. 4 of my former application S. N. 627,605 and in Fig. 8 of this application is what may be referred to as a sequence control for a bowling machine. Its operation may be briefly outlined as follows:

If a strike or a foul is made on the first ball, it puts the machine through a series of operations which will clear the alley and set up a new set of pins and return the bowling ball to the player. On the second ball, the machine will likewise be put through a series of operations which will clear the alley and set up a new set of pins regardless of whether it is a partial score, spare or foul. If a player fails to knock down all ten pins on the first ball, the machine will be put through a sequence of operations which will cause the pins that remain standing to be gripped and elevated above the alley while the fallen pins and ball are removed from the alley and, thereafter, the standing pins will be replaced on the alley to enable the player to throw his second ball.

As was described in my copending application, various safety devices are provided which will stop the machine from operating under certain specified conditions, such as pins being too far off center or where there is an insufficient number of pins in the spotter cups. Since the operation of the sequence control is already adequately described in my copending application, S. N. 627,605, now U. S. Patent 2,559,274, it is not necessary to go into further detail on its operation in this application. I will instead describe in detail how the circuit diagram shown in Fig. 9 ties in with the sequence control and how it operates to start the machine, count frames for a number of players, cancel or make fouls effective, how it causes the alley to be cleared in different stages of the game and puts a new set of pins on the alley, and how it shuts off the machine at the completion of the game.

3. *Description and operation of the game control for an automatic bowling machine*

In addition to the selector switch 54, the lock-in relay S7(106), the coin selector clutch release S8(84) and the Microswitch M, shown in Figs. 1 and 2, and the changes made in Fig. 8 described herein, I have also provided two conventional stepper switches S5 and S6 (Fig. 9) each having four independent banks of contacts. Each bank has a wiper arm W and twenty-five steps which include zero position and twenty-four contact points. The stepper switch is of the type that advances the wiper arm W of each bank one step each time the operating solenoid is deenergized.

Stepper switches S5 and S6 (Fig. 9) are provided with ratchet wheels 111 and 113 respectively. The ratchet wheels 111 and 113 and the wiper blades W are fixedly mounted on shaft 115 and 117 of their respective stepper switches S5 and S6.

The ratchet wheels 111 and 113 are rotated one step at a time by pawls 119 and 121 respectively which are held in engagement with the ratchet wheels 111 and 113 by means of springs 123 and 125. The lever arms 127 and 129, on which the pawls 119 and 121 are mounted, have a downward force exerted thereon by means of springs 131 and 133. The plungers of solenoids 135 and 137 are connected to the lever arms 127 and 129 and, when energized, cause the lever arms to be elevated. When the solenoids 135 and 137 are deenergized, the lever arms 127 and 129 due to the downward pulling action of springs 131 and 133, cause the pawls 119 and 121 to engage with the teeth of their respective ratchet wheels and advance the wheels one notch.

Since the ratchet wheels 111 and 113 are fixedly mounted on the same shafts 115 and 117 as the respective wiper blades W of each stepper switch S5 and S6, the wiper blades W are advanced one contact point in the direction indicated by the arrows whenever their respective solenoids are energized and deenergized. It should be noted that the plunger arms of solenoids 135 and 137 break electrical contacts 139 and 141 each time they are energized. This principle of breaking a contact by the plunger arms of solenoids 135 and 137 may be compared to what happens in the ringing of an electrical bell. In this case, however, the number of contact breaks made by the plungers of solenoids 135 and 137 is very carefully controlled as will be brought out herein.

(a) COUNT OF FIRST 9 FRAMES FOR EACH PLAYER OF A TEAM

Let us assume, for purposes of illustration, that there are two teams, each team consisting of three players, and that these teams will play on two alleys which are equipped with coin operated game control apparatus.

In accordance with the usual practice, the players of one team will first play one frame on one alley and will then change alleys with the players of the opposing team and play the second on the other alley. The players of each team thus continue alternating between alleys for each succeeding frame until all ten frames have been completed. My control apparatus used on each alley will function correctly when this practice is followed, as well as in the case where the players

of each team play all ten frames on the same alley without alternating.

Coins corresponding to the number of players on a team are inserted through the insert opening 22 of the coin control box for each alley. Since the game control apparatus of each alley is independent of that on the adjoining alley, it will be sufficient to merely describe how one of these apparatus will operate since each operates in a similar manner.

When one coin has been inserted into the slotted opening 22, the contact segment 52 of the selector switch 54 (Figs. 6 and 9) can then be advanced one contact by turning knob 40 and the contact segment 52 will then be in contact with the cotact points 2, 3, 4, 5, 6 and 7. Since contact 7 is energized through wire 143, current will also be applied to contacts 2, 3, 4, 5 and 6 of the selector switch 54.

The motor control MC is energized through wire 145 from contact 6 to start the machine. When the shaft 34 has been rotated one notch as just described, it will cause the high part of cam 56 to close the Microswitch M (Figs. 3 and 9) to thereby apply power to the entire sequence control through wire 147 (Figs. 8 and 9). Contacts 2, 3, 4, and 5 of the selector switch 54 apply current through wires 149, 151, 153, and 155 to contact points 2, 3, 4 and 5 of bank I of stepper switch S6 and contact points 1, 2, 3, and 4 of bank II of stepper switch S6, as well as contact points 12 to 23 of bank IV of stepper switch S5.

If three coins are deposited and segment 52 of the selector switch 54 is rotated three steps, power will be applied to contact points 4, 5, 6, 7, 8 and 9 of the selector switch 54. Power will then be transferred from contact points 4 and 5 of the selector switch 54 through wires 153 and 155 to contacts 18 to 23 of bank IV of the stepper switch S5, to contact points 4 and 5 of bank I and contact points 3 and 4 of bank II of stepper switch S6.

When the three coins have been deposited in the coin insert 22 and the shaft 34 rotated in the manner described, the stepper magnet 135 will be connected across the solenoid 422 which operates the magnetic frame counter 420 through wire 157 (Fig. 8), normally open contact 361e, wire 159, normally closed contact 161a of switch-over relay 161 and through wire 163. These connections will cause the wiper arms W of stepper switch S5 to advance one step for each frame played on the alley in the same manner as the frame counter 420 is advanced one digit for each frame by the solenoid 422 as described in my U. S. Patent 2,559,274. This means that in case a foul is made on the first ball, relay 416 is energized thereby opening normally closed contact 416d, which opens the power circuit to solenoid 422 as well as to stepper magnet S-5. This prevents stepper switch S5 from advancing on this first ball, even though a new set of ten pins is deposited on the alley, but it will advance on the second ball of this frame when another set of ten pins is placed on the alley.

Starting in zero position, after the first player has completed playing one frame, the stepper switch S5 will be energized in the manner described so that the wiper blades W will have advanced to step or contact point No. 1 on banks I, II, III and IV. During this operation relay 361 and frame counting magnet 422 are simultaneously energized. Therefore, contact 361e is closed and magnet 135 of stepper switch S-5 is also simultaneously energized. When nine frames have been played on the alley, the wiper blades will have advanced to position No. 9 on each of the four banks of the stepper switch S5.

Steps 9 to 24 of bank II of stepper switch S5 are energized through wire 165, contact 161c, wire 167 and wire 147 from the cam actuated switch M (Fig. 9). The solenoid 135 of stepper switch S5 is connected to wiper arm W of bank II through its interruptor contact 139. Since the points 9 to 24 of bank II of stepper switch S5 are all energized, the wiper W of bank II will continue to energize 135 at each of these contact points. As a result, the wiper W of bank II, being connected in series with solenoid 135 will cause the switch S5 to spin until it is back to zero position. During this spinning operation relay 361 is not energized, contact 361e is open and magnetic frame counter 420 is prevented from advancing with each step of stepper switch S5 from position 9 to position 24 and back to zero. During this same spinning operation, while the wiper of bank IV passes contacts 12 to 23, normally-open contact 161e prevents power from being fed from the wiper of bank II to the wiper of bank IV of stepper switch S5, through contacts 12 to 23 to the contacts 2-5 of bank I and 1-4 of bank II of stepper switch S6.

Step 24 of bank III of stepper switch S5 is also connected to power through wire 177 (Fig. 9) from the cam controlled switch M; while the wiper W of bank III of stepper switch S5 is connected through wire 185 to the solenoid 137 of stepper switch S6 through its interrupter contact 141 (Fig. 9). When the wiper blades W of stepper switch S5 are caused to spin in the manner just mentioned, the wiper blade W of bank III passes the contact point 24. When it passes this point, it causes the stepper switch S6 to be energized and advance the wiper arms of stepper switch S6 one step to position No. 1.

Upon the completion of the next frame on this alley, the stepper switch S5 will again be energized by the same means which energize the solenoid 422 actuating the frame counter 420 (Figs. 8 and 9). This causes wiper blades W of stepper switch S5 to again advance to position No. 1.

The frame, following the frame just mentioned causes S5 to again advance the wiper blades W one step in the same manner. This process continues until the wiper blades W of S5 reach the ninth point whereupon they again automatically spin back to zero position in the manner just described. When the wiper blade W of bank III of stepper switch S5 passes contact point 24, it causes S6 to be again energized through wire 185 as previously described. This results in the wiper arms W of stepper switch S6 being advanced to step or contact point 2.

The wiper contact arms W of stepper switch S5 are then advanced again one step to position No. 1 through the same means that actuates the solenoid 422 which operates the frame counter 420. This process continues until the wiper arms W of S5 have been spun through points 9 to 24 of bank II of stepper switch S5 three times.

The third time the wiper blades W of stepper switch S5 pass contact 24 of bank III, it energizes stepper switch S6 thus advancing the wiper arms W of stepper switch S6 to position No. 3. Since position No. 3 of bank II of stepper switch S6 is energized through wire 153 from contact 4 of selector switch 54, it causes switch-over relay 161 through wire 179, and coin wheel lock-in electromagnet S7 through wire 181, to also become energized. When the lock-in magnet S7

becomes energized, it pulls in the arm 108 locking the ratchet wheel 38 (Figs. 1 and 9) against further movement. From this point on, therefore, no more coins can be used to enable the knob 40 to be turned to allow additional players to enter the game. It will be noted that prior to this time, additional players could enter the game by merely inserting an additional coin into the coin insert and turning the knob 40 one notch. Such additional players would receive the same number of frames and balls as the other players already in the game.

Since switch-over relay 161 becomes energized, normally closed contact 161*c* is opened thereby disconnecting contact points 9 to 24 of bank II of stepper switch S5 from power. Normally open contact 161*d*, on the other hand, is closed causing contact points 1 to 8 of bank II of switch S5 through wire 183, and contact points 11, 14, 17, 20 and 23 of bank I of stepper switch S5 through wire 171, to be connected to power.

Since contact points 1 to 8 of bank II of stepper switch S5 are now connected to power, this will cause the wiper blade W, which is connected to the solenoid 135 of stepper switch S5, to spin to contact point 9.

The energization of switch-over relay 161 also causes the normally closed contact 161*a* to be opened and, from this point on, stepper magnet 135 will be energized through the contact 161*b*, through contact 341*h* of electrical control cam 341 (Fig. 8) and also through contact 361*b* of the table turning and pin distributing actuating cam clutch relay 361.

I have just described how my control counts a total of 27 frames for a team of three players (9 frames for each player). If four players were on each team, my control mechanism would have counted 36 frames instead of 27 frames before the switch-over relay 161 and the coin wheel lock S7 were actuated. On the other hand, if only two players were on each team, the switch-over relay 161 would be actuated after 18 frames had been counted (9 frames for each player). Similarly, if there were only one player on each team, the switch-over relay 161 would be actuated after 9 frames had been counted. It will, therefore, be evident that the setting of the selector switch 54 controls, through bank II of stepper switch S6 and the switch-over relay 161 (Fig. 9), the number of times wiper arm W of bank II of stepper switch S5 will be permitted to spin past the points 9 to 24.

After each player on the team has played 9 frames or a total of 27 frames for the team, my control checks each player in his tenth frame to determine whether or not he has made either a spare or a strike and, therefore, would be entitled to one or two additional balls respectively.

(*b*) FIRST BALL OF THE FIRST PLAYER IN 10th FRAME IS A NORMAL BALL, STRIKE, OR FOUL

After the first player on the team has thrown his first ball in the tenth frame, the rotation of cam 341 will cause cam contact 341*h* to be first closed and then opened. By closing and opening contact 341*h*, the stepper switch S5 will be energized and deenergized once only through certain contacts hereinafter described to advance the wiper arms W of stepper switch S5 one step to contact point 10. If the first ball is a normal ball (not a strike or foul), S5 is energized through contacts 341*h*, 361*b* and 161*b* (Figs. 8 and 9). If the first ball is a strike, S5 is energized through contacts 341*h*, 328*e* and 412*g*. If the first ball is a foul, S5 is energized through contacts 341*h*, 328*e* and 416*f*.

The wiper arms W of stepper switch S5 will, therefore, be advanced to contact point 10 regardless of whether the first ball is a normal ball, a strike or a foul. In case of a foul or a strike on the first ball, the sequence control shown and described in my copending application S. N. 627,605 causes the machine to clear the alley and set up ten new pins. In case the first ball is a normal ball, the machine grips and lifts the pins which remain standing after the first ball is thrown above the alley to allow fallen pins to be swept off the alley, after which the lifted pins are replaced on the alley in the same position they occupied before being lifted. Since the operation of the bowling machine and sequence control is described in detail in my copending application S. N. 627,605, further details of this operation if desired may be had by referring to said application.

(*c*) SECOND BALL OF THE FIRST PLAYER IN 10th FRAME IS NOT A SPARE

If the first player on a team throws his second ball, without committing any foul and without knocking down all of the pins, there will be some pins still standing on the alley. When the ball rolls into the pit, it will actuate the pit switch 300 (Fig. 8) of the sequence control described in my copending application S. N. 627,605. When the table descends, it will cause the relay 328 to be energized thereby opening the normally closed contact 328*e*. As a result, stepper switch S5 can be energized only through contacts 341*h* and 361*b*. The contact 361*b* opens briefly while contact 341*h* remains closed due to the relative timing of cams 341 and 354 (shown in Fig. 4 of my copending application S. N. 627,605). This results in a double impulse to the solenoid 135 of stepper switch S5 causing wiper arms W to advance two steps to contact points 11 and 12. In passing contact 11, the wiper arm W of bank I of stepper switch S5 causes relay 169 to be briefly energized but this has no effect in this case. In this case the sequence control, being in its second ball position, cleared the alley and set up a new set of pins in the usual way described in my copending application, S. N. 627,605.

(*d*) SECOND BALL OF FIRST PLAYER IN 10th FRAME IS A SPARE

If the first player should knock down all the pins with his second ball (spare) without committing a foul, relay 328 will not be energized when the respotting table descends, as fully described in my copending application S. N. 627,605 and, as a result, normally closed contact 328*e* will remain closed. The wiper arms W of stepper switch S5 will be advanced one step to position 11 as a result of cam contact 341*h* being closed by cam 341, through contacts 328*e* and 412*g*.

This will allow the player one additional ball because he made a spare with his second ball. He rolls this additional ball, which is his last ball, immediately.

Since the switch-over relay 161 is energized, contact 161*d* is closed, thus transmitting current through contact point 11 of bank I of stepper switch S5 to the relay 169 thereby energizing the same. By energizing clearing relay 169, contact 169*b* will be closed thereby causing ratchet relay 350 through wire 191 to operate during the

operation of the machine after the player has thrown the additional ball he was allowed as a result of making a spare in the 10th frame. When the ratchet relay 350 is forced to operate in this manner, it will put the machine through a strike cycle, regardless of whether a strike is or is not made with the additional ball. A strike cycle causes the bowling machine to clear the alley and set up ten new pins for the next player. During this cycle cam contact 341*h* will be closed and reopened by the rotation of cam 341 thereby energizing and deenergizing solenoid 135 of stepper switch S5 and causing the wiper arms W of this switch to advance to step 12.

It will be noted that contact 169*a* is connected in parallel with contact 361*b* through wires 187 and 189 and therefore no double impulse is transmitted to stepper switch S5 by normally closed contact 361*b* when the table turning relay 361 is actuated. If the player does not make a strike with this additional ball, the strike lamp relay 368 is not energized when ratchet relay 350 is energized because no-pin relay contact 328X is opened. If this ball is a strike the machine goes through its normal strike cycle, as described in my copending application S. N. 627,605.

(*e*) FIRST BALL OF FIRST PLAYER IN 10th FRAME IS A STRIKE

If the first ball of the first player in the 10th frame was a strike, the wiper arms W of the stepper switch S5 advance from contact position 9 to contact position 10 as previously described, and the sequence control described in my copending application S. N. 627,605 will be in first ball position after the machine has cleared the alley and set up a new set of pins. As a result of making a strike in the tenth frame, the first player is entitled to two additional balls which he throws immediately.

After the first player has thrown his first additional ball, the wiper arms W of stepper switch S5 will advance only one step from contact point 10 to 11 for the same reasons stated in connection with the first ball of the tenth frame regardless of whether this ball is a partial hit, no hit, a strike or a foul.

Since wiper arm W of bank I of stepper switch S5 is in position 11, relay 169 will be energized through 161*d* since the switch-over relay 161 is energized.

If the first player makes a strike with his first additional ball, the sequence control described in my copending application will cause the machine to clear the alley and set up a new set of pins. The electrical control cams in my copending application would then be in first ball position.

In this case, where the sequence control is in first ball position the machine is put through a strike cycle after the second additional ball has been thrown by the first player (this is the last ball to which he is entitled). Relay 169 being energized, has closed the contact 169*b*. After the second additional ball has been thrown relay 350 will be actuated during the operation of the machine and cause it to go through a strike cycle. The stepper switch S5 advances the wiper arms W one additional step to position 12 because contact point 169*a* is closed as a result of relay 169 being energized.

If the first player throws a no-hit, a partial hit, or a foul with his first additional ball, the electrical control cams of the sequence control described in my copending application referred to above will be in second ball position as a result of the first additional ball being thrown. In this case, stepper switch S5 will only advance one more step to contact point 12 on account of 169*a* being closed. Since the machine is in second ball position, the alley is cleared after the second ball has been thrown and a new set of pins placed on the alley in the manner fully described in my copending application S. N. 627,605.

(*f*) FIRST BALL OF FIRST PLAYER IN 10th FRAME IS A FOUL

In the event a foul is made on the first ball in the tenth frame, S5 will be energized through contacts 341*h*, and 328*e* and 416*f* thereby advancing the wiper arms W of stepper switch S5 from contact position 9 to contact position 10 as previously mentioned. The operation of the foul circuit in this case is the same as for any first ball foul as described in my sequence control copending application Serial No. 627,605, namely 412, 416 and 418 operate in sequence to set up ten new pins and advance the control to second ball position at the end of the foul cycle through double operation of ratchet relay 350.

If the second ball is not a spare or is a foul, the player will not be entitled to any additional balls, and the alley will be cleared and ten new pins set up in the manner described in my copending application Serial No. 627,605. The wiper arms W of stepper switch S5 will be moved from position 10 to position 12 by a double impulse to stepper switch S5 due to the relative timing of cams 341 and 354 as previously mentioned. When the second ball is a foul, relay 412 is energized to light the foul light.

In the event the first player made a strike on his first ball, in the tenth frame, he would be entitled to two additional balls which he would roll immediately. If he makes a foul on his first additional ball, the sequence control will be operated in the same manner as in the case of a foul on the first ball in the tenth frame described above. In this case the electrical control cams of the sequence control described in copending application Serial No. 627,605 would go into second ball position. When the player makes a foul with his second additional ball after having made a strike in the tenth frame and a foul with his first additional ball, the machine, since it is in second ball position, operates the same as on the throwing of any other second ball. The alley is cleared and a new set of pins is placed on the alley and the electrical control cams of my copending application Serial No. 627,605 go into first ball position. The foul relay 412 in this case would also be energized to light the foul light.

Where the first player makes a foul on his second additional ball, after having made a strike with his first ball in the tenth frame and a strike with his first additional ball, the operation of relay 416 (and consequently 418) is prevented by the opening of normally closed contact 169*c* and the sequence control is prevented from shifting to second ball position.

As shown in my U. S. Patent 2,559,274, in case of a first-ball strike, relay 412 is energized first, connecting the magnet of relay 416 in multiple with the magnet of relay 350 through contact 412*c*. Thus, when relay 350 is energized, relay 416 will also be energized. By inserting contact 169*c* in series with contact 412*c*, this connection is broken and the operation of relay 416 is prevented on the last ball of a player.

(g) SECOND BALL IN 10th FRAME OF FIRST PLAYER CAUSES STANDING PINS TO MOVE FAR OFF CENTER

If the first player's second ball in the tenth frame causes a standing pin to move far off center so that relay **366** does not operate, relay **328** is operated nevertheless through normally closed contact **366***d* and locks in through holding contact **328***d* neither of which contacts was shown in my copending application Serial No. 627,605. This causes contact **328***e* to open thus causing stepper switch S5 to advance wiper blades W two steps because the player did not make a space and therefore is not entitled to any additional balls.

If the player makes a spare in the tenth frame thus entitling him to one additional ball or if the player makes a strike in the tenth frame and a strike with his first additional ball, the electrical control cams described in my copending application Serial No. 627,605 will be in first ball position when the player throws the last ball to which he is entitled. If this last ball causes a standing pin to move far off center, the closing of contact **169***b* causes relay **350** to operate even though contact **366***a* is open. The opening of contact **169***d* prevents the operation of relay **400** which would otherwise operate to disengage the sweep so that all pins will be swept off the alley and ten new pins reset. In this case the wiper arm W of stepper switch S5 would be in position 11, and after the player has thrown his last ball, the wiper arms W of stepper switch S5 would be advanced from position 11 to position 12 in the manner previously described.

(h) SECOND PLAYER, THIRD PLAYER, ETC.

After the first player has thrown his last ball, wiper arms W of stepper switch S5 will have been advanced to step 12 as described above, while the wiper arms W of stepper switch S6 will remain on step 3. The same three-count sequence is repeated for the next player on steps 12, 13 and 14 of stepper switch S5 and for the third player on steps 15, 16 and 17 of stepper switch S5.

Since we have assumed that there were three players on each team, in the case used as an illustration, after the third player has rolled his last ball, the wiper arms W of stepper switch S5 advance to the step 18 when contact **341***h* is opened. The solenoid **135** of stepper switch S5 will then be connected to power through its interrupter contact **139**, contact **161***e*, steps 18 to 23 on bank IV and contacts **4** and **5** on selector switch **54**. This causes the wiper arms W of stepper switch S5 to spin on to step 24. When the wiper arm W of bank III of stepper switch S5 reaches step 24, it will energize the solenoid **137** of stepper switch S6 causing the wiper arms W of stepper switch S6 to advance to contact position No. 4. The solenoid **137** of stepper switch S6 is then connected to power through interrupter contact **141**, contacts **4** and **5** on bank I of stepper switch S6 and through contacts **4** and **5** on selector switch **54**. Being energized through its own interruptor contact **141**, stepper switch S6 will spin from position 4 till the wiper arm of bank I finds a contact without power, which is position 6.

At this point, relay **161** and the coin wheel locking magnet S7 are released, thus reclosing contact **161***c* and applying power to contacts **9—24** of bank II of stepper switch S5 and returning the wiper arms W of stepper switch S5 to zero position. Steps 6 to 23 on bank I of stepper switch S6 are connected to power through wire **193** at the end of the final cycle of the machine by the reclosing of cam contact **362***b* (shown in Fig. 4 of my copending application S. N. 627,605). Stepper switch S6 advances from position 6 to position 24 by spinning since contact points **6** to **23** of bank I of stepper switch S6 are energized from cam contact **362***b* referred to above.

At this point, the coin control clutch release magnet S8 (Figs. 1 and 9) is energized through step 24 on bank III of stepper switch S6 and the solenoid **137** of stepper switch S6 is energized through contact point **24** on bank IV of stepper switch S6. Selector switch **54** is returned to its original position by the clock spring **86** (Fig. 1).

The circuit between points **6** and **7** on selector switch **54** is broken and motor control MC (Fig. 8) is deenergized and stops the motor. Switch M opens, disconnecting power from the sequence control and solenoid **137** of stepper switch S6 is deenergized and the wiper arms W of stepper switch S6 advance to zero position.

(i) CANCELLATION OF FOUL IMPULSE

In this application, I have provided for an automatic cancellation of a foul impulse in the event that a player steps over a foul line but does not throw his ball and thereby avoids what would have been a foul had he thrown the ball.

I have now provided a normally open contact **308***b* instead of the former contact **412***b* shown in Fig. 4 of my copending application S. N. 627,605, now U. S. Patent 2,559,274. The foul indicator is constructed with a timing device so that after a foul has been made, the relay magnet **409** maintains the contact **410** in closed position for a predetermined length of time (for example about ten seconds) sufficient for even a slow ball to reach the pit. As long as the contact **410** remains closed, relay **412** will be energized through normally closed cam contact **362***b* (Fig. 4 of copending application S. N. 627,605, now U. S. Patent 2,559,274). If the ball reaches the pit within this predetermined period, the machine will start immediately as described in my previous application and relay **412** will be held in by the closing of contact **308***b* until cam **414** opens (see Figure 4 of U. S. Patent 2,559,274).

If the foul impulse is not followed by a ball, foul indicator contact **410** opens at the end of the above ten second delaying period thereby releasing relay **412**.

It is also possible to modify the sequence control shown in my former application S. N. 627,605 by introducing a normally open contact on relay **302** in the wire **411** in series with contact **410** of the foul indicator. The latter again must be of such a construction as to remain closed for a limited period of time. In that case relay **412** will not be energized until the ball reaches the pit and if no ball is rolled contact **410** would reopen. This latter alternative does not have the advantage of my first method in that there is no visual indication that a false foul has been committed and a player, therefore, would not have any visual indication that it is all right to roll again.

The invention above described may be varied in construction within the scope of the claims, for the particular device selected to illustrate the invention is but one of many possible embodiments of the same. The invention, therefore, is not to be restricted to the precise details of the structure shown and described.

What I claim is:

1. In an automatic bowling pin spotter and respotter machine, a sequence control constructed and arranged to put said machine through one cycle of operation for removing only fallen pins from the alley and through another cycle of operation for removing all fallen and standing pins from the alley and spotting a complete set of pins on the alley, a ball return actuated by said sequence control for returning the ball to the player in each cycle, a foul detector, connecting means between said sequence control and said foul detector, to cause said sequence control to go through said second cycle to place a complete set of pins on the alley each time a foul is made, discriminating means forming part of said sequence control for distinguishing between first ball fouls and second ball fouls, a counting device connected to said sequence control and actuated thereby for counting the number of times said bowling pin spotter machine sets a new complete set of pins on the alley, means responsive to the operation of said foul detector and said discriminating means for preventing said counting device from counting a frame when a foul is made on the first ball, means responsive to the counting of a predetermined number of frames to render said counter capable of counting all thrown balls, and means for incapacitating said counter in response to the rolling by each player of all the balls to which he is entitled in a game of bowling.

2. In an automatic bowling pin spotter and respotter machine, a sequence control constructed and arranged to put said machine through one cycle of operation for removing only fallen pins from the alley, and through another cycle of operation for removing all fallen and standing pins from the alley and spotting a complete set of pins on the alley, a ball return actuated by said sequence control for returning the ball to the player in each cycle, a foul detector, connecting means between said sequence control and said foul detector to cause said sequence control to go through said second cycle to place a complete set of pins on the alley each time a foul is made, discriminating means forming part of said sequence control for distinguishing between first ball fouls and second ball fouls, a counting device connected to said sequence control and actuated thereby for counting the number of times said bowling pin spotter machine sets a new complete set of pins on the alley, means responsive to the operation of said foul detector and said discriminating means for preventing said counting device from counting a frame when a foul is made on the first ball, except when this happens in the last frame of any player, a switch operated by said counting device in its starting position for stopping the driving means for said machine, mechanism for returning said counting device to its starting position, a second switch actuated by said sequence control at the end of each cycle of said machine, a third switch actuated by said counting device when the last ball in a game has been rolled, and an electrical circuit interconnecting said second and third switches with said mechanism to cause it to return said counting device to its starting position when said second and third switches are actuated simultaneously, thereby causing said first mentioned switch to stop the driving means of said machine when the last cycle of the machine at the end of a game has been completed.

3. An automatic bowling pin spotting and respotting machine comprising a sequence control for putting said machine through spotting and respotting cycles, a foul detector positioned at the end of an alley beyond which a bowling player is not permitted to transgress when throwing a ball, a timing device for maintaining said foul detector energized for a predetermined period after the foul zone has been transgressed by a player, a ball detecting device spaced from said foul detector for starting the operation of the machine when a bowling ball has been thrown, said ball detector being interposed in a wiring circuit between said foul detector and said sequence control to close said circuit to shift said control into its spotting cycle to set a complete set of pins on the alley whenever the ball detector is energized within the period said foul detector is maintained energized, a game control for counting the number of frames bowled by each player and such extra balls as each player is entitled to in a game of bowling, interconnections between said game control and said sequence control for stopping said machine from further operation after counting a predetermined number of frames and such extra balls to which each player on a team is entitled in a game of bowling, and means actuated by said foul detector preventing said game control from counting a completed frame when a player commits a foul on the first ball resulting in a new set of pins being spotted on the alley, and means responsive to the counting of a predetermined number of frames to render said counter capable of counting all thrown balls.

4. In an automatic machine of the type having operating mechanism including means for standing a new set of bowling pins on an alley, means for removing fallen bowling pins from the alley after each first ball, and means for clearing the alley of all pins at the end of each frame, a sequence control for setting the sequence in which these means are actuated, a game control apparatus connected to and actuated by said sequence control for first counting a predetermined number of frames for each player on a team up to the last frame and then counting the number of balls including extra balls for making a strike or spare in the last frame each player throws and is entitled to receive in the last frame, a machine stopping switch operated by said game control apparatus in its starting position for stopping the driving means for said machine, mechanism for returning said game control to its starting position, a second switch actuated by said sequence control at the end of each cycle of said machine, a third switch actuated by said game control when the last ball in a game has been rolled, and an electrical circuit interconnecting said second and third switches with said mechanism to cause it to return said game control to its starting position when both said second and third switches are actuated simultaneously, thereby causing said first mentioned switch to stop the driving means of said machine when the last cycle of the machine at the end of a game has been completed.

5. In an automatic bowling pin setting machine of the type having means for setting a complete set of pins on a bowling alley, means for removing only fallen pins from the bowling alley, and means for removing both fallen and standing pins from the bowling alley, a sequence control device connected to said machine for causing at least one of said means to operate each time a bowling ball is thrown, a game con-

trol connected to and actuated by said sequence control device for counting the number of frames and extra balls each player on a team rolls in a game of bowling, said game control comprising a stepper switch device having one bank of contacts for counting nine frames for each player on a team and another bank of contacts coacting with said sequence control device for counting three balls for each player in the last frame, means for causing said second bank of contacts to make a double count after the second ball is rolled each time a player fails to make a strike on the first ball or a spare on the second ball in the last frame, and an incapacitating device controlled by said sequence control device and said game control to incapacitate said sequence control device after said stepper switch device has counted nine frames and three balls for each player and after said means have placed a complete set of pins on the bowling alley.

6. In an automatic bowling pin setting machine of the type having a sequence control for spotting and respotting bowling pins on a bowling alley, a movable game control device having a deactivating position in which said sequence control is deactivated and activating positions for placing and maintaining said sequence control in condition for play for a game of bowling for a certain number of players, a counter actuated by said sequence control each time a new set of pins is placed on the alley except after a first ball foul, for counting a predetermined number of frames for each player, means actuating said counter in the last frame of each player each time a bowling ball is thrown, said means having a provision for counting three balls for each player and for making a double count after the second ball is rolled each time a player fails to make a strike on the first ball or a spare on the second ball in the last frame, an incapacitating device actuated by said game control when it returns to said deactivating position to remove said sequence control from further play, a switch actuated by said sequence control at the end of the cycle each time said machine is put through a cycle of operation by said sequence control, a second switch actuated by said counter after the last ball has been rolled by the last player in the game, and electrical connections between said switches and said game control for returning the latter to deactivating position when both switches are actuated simultaneously, thereby causing said incapacitating device to remove the sequence control from further play when the last cycle in the game has been completed.

7. In an automatic bowling pin setting machine of the type having a sequence control for spotting and respotting bowling pins on an alley, means actuating said sequence control each time a bowling ball is thrown, a movable game control having an activating position to allow a certain number of players to bowl a game and a deactivating position to deactivate said machine after a bowling game has been completed, counting mechanism actuated by said sequence control for counting a predetermined number of frames up to the last frame for all players, said game control having means enabling said game control to be reset to enable additional players to enter the game up to the last frame, a lock for preventing said game control from being adjusted to enable additional players to enter the game, said lock being operative by said counting mechanism in response to the completion by each player of the next to the last frame, a means included in said counting mechanism for counting three balls in the last frame for each player and for making a double count after the second ball is rolled each time a player fails to make a strike on the first ball or a spare on the second ball in his last frame, a switch actuated by said sequence control at the end of each cycle of operation of said machine, a second switch actuated by said counting device after the last ball has been rolled by the last player in the game, and electrical connections between said switches and said game control for returning the latter to deactivating position when both switches are actuated simultaneously to deactivate said machine.

8. In an electrical control for operating an automatic pin setting and resetting machine, one set of electrical control cams for moving the machine through a first ball cycle of operation to remove fallen pins from the bowling alley, a second set of electrical control cams for moving said machine through a second ball cycle of operation for first removing both fallen and standing pins from the bowling alley and then spotting a new set of bowling pins on the alley, a sequence control for causing one or the other of said sets of cams to put said machine through one of said cycles of operation, a game control having a deactivating position in which said sequence control is deactivated and an activating position in which said sequence control is activated to allow a certain number of players to bowl a game, a counter actuated during the first nine frames each time a complete set of pins is caused to be placed on the alley by said sequence control except after a foul on the first ball and actuated in the tenth frame each time a bowling ball is thrown to count a predetermined number of balls for each player in the game, and for making a double count after the second ball is rolled each time a player fails to make a strike on the first ball or a spare on the second ball in his last frame, means on said game control for removing said sequence control from further operation when said game control is in deactivating position, a switch actuated by said sequence control at the end of each cycle of operation of said machine, a second switch actuated by said counter after the last ball has been rolled by the last player in the game, and electrical connections between said switches and said game control for returning the game control to deactivating position when both switches are actuated simultaneously, thereby causing said game control to remove the sequence control from further operation when the last cycle in the game has been completed.

9. In an automatic pin spotting and respotting machine, means for removing all pins from the bowling alley and spotting a new set of pins on the bowling alley, means for removing fallen pins from the bowling alley and respotting the standing pins on the bowling alley, a sequence control operating one or the other of said means each time a bowling ball is thrown, a game control device having an activating position for activating said machine for a game of bowling and a deactivating position for deactivating said machine when the game is completed, said game control device comprising a counter actuated each time said sequence control causes one of said means to place a complete set of pins on the alley, except after a foul on the first ball, to count a total of nine frames for each player in

the game, means included in said counter for counting in the tenth frame a predetermined number of balls for each player and for making a double count after the second ball is rolled each time a player fails to make a strike on the first ball or a spare on the second ball in his last frame, a machine stopping switch actuated by said game control device in its deactivating position for stopping the driving means for said machine, a second switch which is actuated at the end of each cycle of operation of said machine by said sequence control, and interconnections between said second switch and said game control to return said game control to its deactivating position when said second switch is actuated and the counter has counted for all players all the extra balls to which they are entitled, to thereby actuate said machine stopping switch to render the machine inoperative at the completion of the last cycle in the game.

10. A bowling pin spotting machine constructed and arranged to spot and respot bowling pins on the bed of a bowling alley, said machine having a sequence control for controlling the sequence in which said machine spots and respots bowling pins on the bowling alley, a second control having a deactivating position in which said sequence control is deactivated after a bowling game has been completed and an activating position for placing said sequence control in condition for play to allow a certain number of players to bowl a game, counting means actuated by said sequence control for counting the total number of frames bowled by all the players up to the last frame and counting a predetermined total number of balls for all players in the last frame, means for making a double count after the second ball is rolled each time a player fails to make a strike on the first ball or a spare on the second ball in the last frame, a device actuated by said second control to deactivate said machine when said second control is in deactivating position, a switch actuated by said sequence control at the end of each cycle of operation of said pin spotting machine, a second switch actuated by said counting means after the last player has rolled his last ball, and electrical connections between said switches and said second control for returning the second control to deactivating position when both switches are actuated simultaneously thereby causing said second control to deactivate the machine at the completion of the last cycle in the game.

11. In an automatic bowling pin spotting machine of the type having operating mechanism including means having a cycle of operation for spotting a complete set of bowling pins on an alley, means having a cycle of operation for removing pins knocked down after the throwing of the first ball and means for removing both standing and fallen pins from the alley, a sequence control for setting the sequence in which these means are actuated, a movable game control having a deactivating position to deactivate said sequence control and an activating position for placing and maintaining said sequence control in condition for play for a game of bowling for a certain number of players, a counter activated by said sequence control for counting the total number of frames bowled by all players in a game of bowling up to the last frame and for counting a predetermined number of balls for all players in the last frame, means for making a double count after the second ball is rolled each time a player fails to make a strike on the first ball or a spare on the second ball in the last frame, a first switch actuated by said counter after each player on the team has played all the frames and thrown all the balls to which he is entitled in a game of bowling, a second switch operated by said sequence control each time one of said means having a cycle of operation completes its cycle of operation, and interconnections between said first and second switches for returning said game control to deactivating position to deactivate the sequence control when both of said switches are actuated simultaneously.

12. In an automatic bowling pin handling machine constructed and arranged to go through a spotting cycle at one time and through a respotting cycle at another time, a sequence control device connected to said machine for fixing the cycle through which said machine goes, a movable game control having a deactivating position for deactivating said sequence control and an activating position for maintaining said sequence control in condition for play for a game of bowling for a certain number of players, a counter actuated by said sequence control each time a complete set of pins is placed on the alley, except after a first ball foul, for counting the total number of frames for all players up to the last frame and means included in said counter for counting a predetermined number of balls for each player in the last frame, means for causing a double count to be made after the second ball is rolled each time a player fails to make a strike on the first ball or a spare on the second ball in the last frame, a first switch actuated by said sequence control device at the end of each cycle of operation of said machine, a second switch actuated by said counter after each player has completed all frames and thrown all balls to which he is entitled in a game, and connections between said first and second switches to return said game control to deactivating position to deactivate the sequence control to shut off the machine when said first and second switches have both been actuated.

13. In an automatic bowling pin setting machine of the type having means for spotting bowling pins on a bowling alley and means for respotting bowling pins on a bowling alley, a sequence control causing one or the other of said means to operate each time a bowling ball is thrown, a movable game control device having a deactivating position for deactivating said sequence control to shut off the machine and an activating position for activating said sequence control to allow a certain number of players to play a game of bowling, a counter actuated by said sequence control to count the total number of frames played by all players up to the last frame and for counting a predetermined number of balls for all players in the last frame, means for making a double count after the second ball is rolled each time a player fails to make a strike on the first ball or a spare on the second ball in the last frame in a game of bowling, a switch positioned to be actuated by said game control device when in activating position to activate said sequence control and to be actuated by said game control device when in deactivating position to deactivate said sequence control, a second switch actuated by said sequence control at the end of each cycle of operation of said machine, means for returning said game control device to deactivating position, and interconnections between said counter and said second switch to actuate said last mentioned means to shut off

the machine when said counter has counted all balls to which all the players are entitled and said second switch has been actuated at the end of a cycle.

14. In an automatic bowling pin setting machine of the type having means for removing all fallen and standing pins and for spotting a new set of bowling pins on an alley in one cycle of operation, and means for removing all fallen pins and respotting all standing pins in another cycle of operation, a sequence control for determining the cycle said machine goes through, a movable game control having a position for activating said sequence control to permit a game of bowling to be played by a certain number of players and another position for deactivating the machine at the end of the game, a device actuated by said sequence control for counting a predetermined number of frames for all the players in a game of bowling up to the last frame and for counting a predetermined number of balls for all the players in the last frame, means for making a double count after the second ball is rolled each time a player fails to make a strike on the first ball or a spare on the second ball in the last frame, means actuated by said game control when in deactivating position to render said machine inoperative, a switch actuated by said sequence control at the end of each cycle of operation of said machine, a second switch actuated by said counting device when all players have rolled all the balls to which they are entitled in the last frame, and means interconnected with said first and said second switches to return said game control to its deactivating position to operate said means to stop the operation of said machine when both switches are actuated.

15. In an automatic bowling pin handling machine of the type having means for removing and replacing standing bowling pins on a bowling alley, means for clearing bowling pins from the alley and means for spotting a new set of pins on the bowling alley, a device for setting the sequence in which these means are actuated, a game control apparatus connected to and actuated by said device for counting a predetermined total number of frames up to the last frame for all players and for counting a predetermined number of balls in the last frame for all players and automatically making a double count after the second ball is rolled each time a player fails to make a strike on the first ball or a spare on the second ball in the last frame, and machine stopping apparatus actuated by said game control apparatus to stop the operation of the machine when said game control is in starting position, a switch actuated by said device at the end of each cycle of operation of said machine, a second switch actuated by said game control apparatus when all players have thrown all the balls which they are entitled to throw in a game, and mechanism for returning said game control to starting position when said first and second switches are actuated, causing said machine stopping apparatus to stop said machine at the completion of the last cycle following the throwing of the last ball of the last player.

16. In an automatic bowling pin spotting and respotting machine having a sequence control constructed and arranged to put said machine through a cycle of operation for spotting a new set of pins on an alley and through another cycle of operation for removing fallen pins from the alley, a movable game control having a machine activating position and a machine deactivating position, a counting device activated by said sequence control for counting a predetermined total number of frames bowled by each player up to the last frame and for counting a total predetermined number of balls thrown by each player in the last frame, means for making a double count after the second ball is rolled each time a player fails to make a strike on the first ball or a spare on the second ball in the last frame, a switch operated by said counting device when it has counted all the frames and balls to which the players in a game are entitled, a second switch actuated by said sequence control at the end of each cycle of operation of said machine, a third switch actuated by said game control when in deactivating position to deactivate said machine, and mechanism for returning said game control to deactivating position when said first and second switches are both actuated simultaneously, to thereby actuate said third switch to deactivate said machine when the last cycle of the machine has been completed at the end of a game of bowling.

References Cited in the file of this patent

UNITED STATES PATENTS

Number	Name	Date
1,911,436	Cone	May 30, 1933
2,118,303	Hehn	May 24, 1938
2,388,708	Bates	Nov. 13, 1945
2,411,789	Hartwig	Nov. 26, 1946
2,417,092	Smith	Mar. 11, 1947
2,425,255	McLagan et al.	Aug. 5, 1947
2,425,256	McLagan et al.	Aug. 5, 1947
2,559,274	Broekhuysen	July 3, 1951