United States Patent

Bowen

[15] **3,648,695**

[45] **Mar. 14, 1972**

[54] PRESSURIZED APPLICATOR FOR FOAMED MEDICATIONS AND SANITARY REPLACABLE APPLICATOR TIP THEREFOR

[72] Inventor: **Max E. Bowen,** 30885 W. 6th Mile Road, Livonia, Mich. 48152

[22] Filed: **May 1, 1970**

[21] Appl. No.: **33,624**

[52] **U.S. Cl.** **128/225,** 128/239

[51] **Int. Cl.** **A61m 3/00**

[58] **Field of Search** ..... 128/225, 224, 239, 247, 173, 128/230, 234; 206/63.2, 56 AB

[56] **References Cited**

UNITED STATES PATENTS

2,865,370	12/1958	Gattone	128/173
3,318,309	5/1967	Bowen	128/225
3,406,686	10/1968	Keller	206/63.2 X

FOREIGN PATENTS OR APPLICATIONS

3,755	1895	England	128/232

Primary Examiner—Richard A. Gaudet
Assistant Examiner—J. Yasko
Attorney—Austin A. Webb

[57] **ABSTRACT**

A pressurized vial for containing a medication and a foaming gas, a dose forming and ejecting sleeve telescoped around the vial, a dose releasing valve in one end of the vial having an operating button at the opposite end of the vial, a discharge opening for the dose of foamed medication in the end of the outer sleeve, and an applicator tip attachable within the discharge opening of the outer vial, characterized by an inwardly projecting portion on the tip which extends into the path of the valve element of the pressurized vial so that movement of the outer sleeve bearing the applicator tip beyond the dose dispensing movement of the sleeve will cause the end of the valve to engage the inner end of the applicator tip and eject the applicator tip from the sleeve without requiring exterior contact with the applicator tip.

2 Claims, 4 Drawing Figures

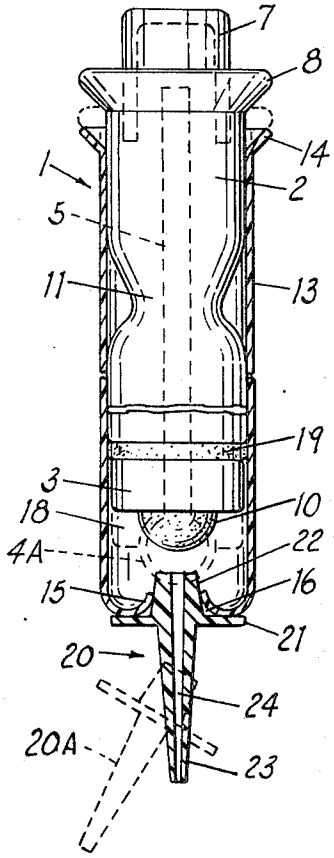

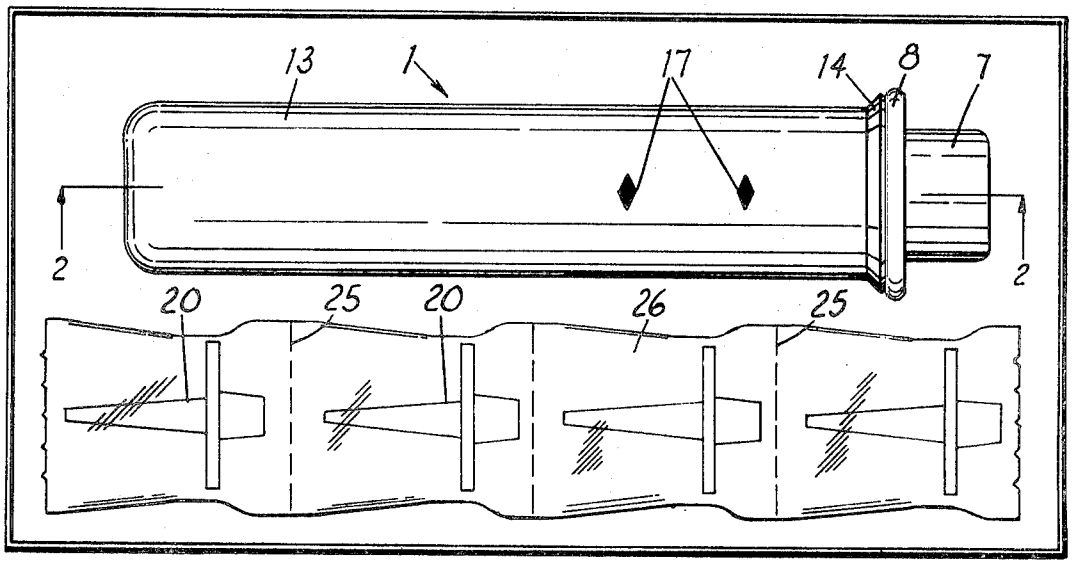

Fig. 1

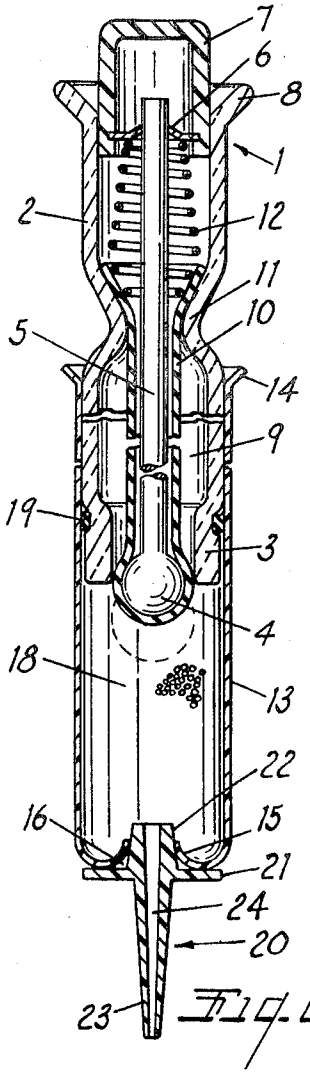

Fig. 2

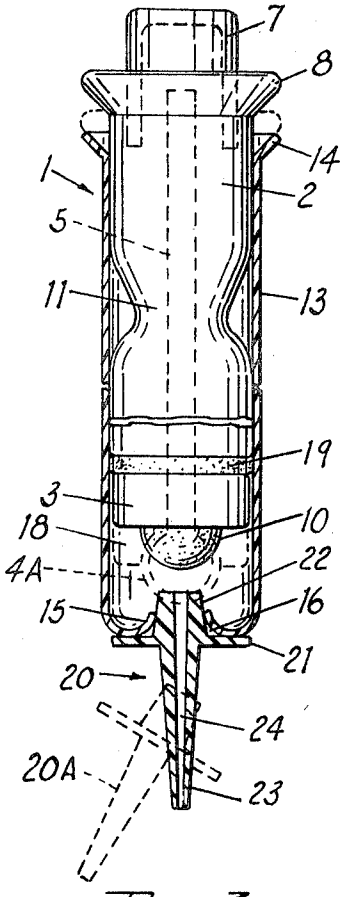

Fig. 3

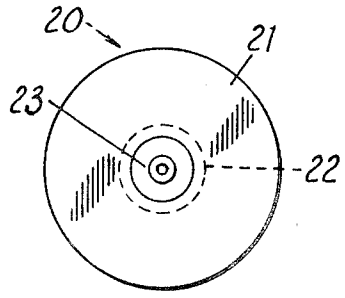

Fig. 4

INVENTOR.
Max E. Bowen
BY Austin A. Webb
ATTORNEY

PRESSURIZED APPLICATOR FOR FOAMED MEDICATIONS AND SANITARY REPLACABLE APPLICATOR TIP THEREFOR

RELATED APPLICATIONS

The medicinal dose forming and dispensing vial and sleeve of the application and the automatically ejectable applicator tip are improved forms of the foaming medicinal applicator disclosed and claimed in U.S. Pat. No. 3,318,309, the improvement lying in the provision of a new applicator tip which can be applied and removed without contamination of either the applicator or of successively applied applicator tips.

The drawings of which there is one sheet illustrate a highly practical form of the dose forming and dispensing apparatus and the novel applicator tip therefor.

FIG. 1 is a plan view of the dose forming and medication holding vial packaged with four separately wrapped and individually sanitized tips for use with the single holding and dose forming apparatus.

FIG. 2 is a fragmentary longitudinal cross sectional view through the medication holding vial and the dose forming member of the apparatus taken along the plane of the line 2—2 of FIG. 1.

FIG. 3 is a fragmentary longitudinal cross sectional view similar to FIG. 2 but showing the apparatus in a use position in which the dose of medication has been ejected, with a dotted line position of the apparatus indicating the action of the structure in ejecting the used and possibly contaminated applicator tip.

FIG. 4 is an enlarged outer end elevational view of the applicator tip shown in the other Figures.

The dose forming and ejecting apparatus and the applicator tip therefor are used for introducing a foamed medication into a body opening in which the probe for contacting the body may become contaminated by the infection or disease for which the medication is being applied. One common use for the apparatus is for the treatment of mastitis which is a highly contagious infection in the teats of cows. Accordingly the example of the apparatus illustrated includes four separately packaged applicator tips for injecting a dose of medicated foam into the teat opening of each of the four teats of the cow without having one applicator transmit infection from one teat to another. The shape and size of the applicator tip may be varied considerably and the apparatus may be used for other purposes including the application of medication to human bodies.

The medicine holding and dose forming and ejecting apparatus indicated generally by the numeral 1 is the same as that shown more clearly in the above identified patent, with the exception of some changes in the dose releasing and forming button for the valve. The apparatus includes an inner generally cylindrical medication holding vial 2 which is adapted to hold a medicated liquid and a pressurized gas capable of forming the liquid into a foam. A thickened lower end of the vial 3 forms an outlet opening which is closed by the ball end 4 of a valve on the end of a valve rod 5. The rod extends substantially through the vial and is gripped at its upper end by a springable snap on washer or nut 6 which has its periphery embedded within a hollow plastic button 7. The button projects from the upper flared end of the vial at 8 and functions to press the ball head downwardly to open the lower medication containing chamber 9 to permit the escape of the foamed medication.

As in the prior dose forming and applying apparatus the valve head and valve stem 5 are surrounded by a continuous rubber sleeve 10 which extends through the lower portion of the vial and a constriction or narrowed portion 11 of the vial near its upper end. A coiled spring 12 bears between the inside of the upper end of the sleeve and holds it in sealing engagement with the inner surface of the constriction 11 while the upper end of the spring bears against the washer 6 and holds the valve 4 closed.

Fitted telescopically and slidably around the exterior of the vial 2 is a tubular plastic dose receiving member or tube 13. The dose forming sleeve or tube 13 has a flared upper end 14 and an annular inwardly curved flange 15 at its bottom which defines a central outlet opening 16. Dose measures indicated at 17 may be provided so that the plastic sleeve may be moved forwardly the desired amount as shown in FIG. 2 to create a dose chamber or cavity 18 of the desired size. A seal 19 between the interior of the dose forming sleeve and the end of the glass vial prevents the foamed medication from escaping upwardly from the outer sleeve. By pressing downwardly on the button 7 the valve rod 5 and ball head 4 are moved away from the lower end of the vial and a dose of foamed medication is ejected into the chamber 18.

The several applicator tips indicated generally at 20 are plastic members having a circular flange 21 near their upper end with a tapered neck 22 sized to be pressed into frictionally held engagement in the outlet opening 16 of the plastic dose forming member. Downwardly or outwardly from the flange 20 the tips have elongated and tapered applicator tubes or nozzles 23 that are sized to be forced into the body opening of the animal or person to receive the medication. When the medication holding vial 2 and the valve 4 carried thereby are pressed downwardly within the dose forming tube or sleeve 13, the dose of medication in the chamber 18 will be largely extruded through the central discharge passage 24 formed in the tip or nozzle 23. When used, the tip will be highly contaminated and to avoid this contamination being passed onto another animal, the applicator including the dose forming sleeve 13 and the medication holding vial 2 can be removed carrying the contaminated tip 20 along with it. Then by pressing the glass vial 2 downwardly into the dose holding chamber 18, the lower end of the ball valve 4 or rather the portion of the rubber sleeve surrounding the ball valve will engage the inner supporting end 22 of the applicator tip as shown by the dotted lines at 4A in FIG. 3 to force the tapered end 22 out of the opening 16. The used and contaminated tip then falls away as indicated by the dotted lines 20A without the necessity of touching the probe.

The four probes or applicator tips 20 shown in FIG. 1 are packaged in a continuous strip of heat sealable protective material such as plastic or cellophane and as is indicated by the perforated lines at 25 each section of the elongated tube 26 may be torn off separately so that handling one probe will not contaminate the remaining probes. The tear lines 25 are most closely positioned to the tapered mounting tips 22 of the applicator tips so that a person handling the apparatus may grip the elongated nozzle end 23 through the wall of the transparent bag 26 and by squeezing the applicator tip upwardly through the normally opened end of the bag can force the applicator tip into the opening 16 without ever coming into contact with the nozzle end 23 and thus without contaminating the tip. The broad circular flange 21 of the applicator tip serves as a limiting stop for positioning the applicator tip in the dose forming tube and also acts as an abutment against which finger pressure may be applied through the bag 26 to force the tip into the dose forming tube.

What is claimed as new is:

1. Apparatus for applying a foamed medication to a body opening in which the medication and a foaming agent are retained under pressure in a storage vial and released into a tubular dose receiving chamber telescoped around the vial by opening a valve in the end of the vial enclosed in the tubular sleeve, characterized by the fact that the tubular dose forming sleeve has a central outlet opening opposed to the valve on the vial,

and a replacable applicator tip having a discharge passage formed therethrough,

said tip having a first end sized to have a diameter substantially the same as said outlet opening and being slideably and frictionally received and held in the outlet opening of said dose forming sleeve,

and a probe and discharge end extending oppositely from said first end and sized to be introduced into a body opening,

said first end projecting into said sleeve into the path of said vial and valve when said sleeve is fully telescoped over said vial whereby projecting said vial fully into said sleeve ejects said tip from said sleeve.

2. Apparatus as defined in claim 1 in which there is an annular projecting flange around said tip between its ends.

* * * * *