United States Patent [19]

Griffee et al.

[11] **3,811,127**

[45] **May 14, 1974**

[54] **ANTENNA FOR AIRBORNE SATELLITE COMMUNICATIONS**

[75] Inventors: **Leslie V. Griffee**, Dallas; **Mardis V. Anderson**, Richardson, both of Tex.

[73] Assignee: **Collins Radio Company**, Dallas, Tex.

[22] Filed: **Aug. 10, 1972**

[21] Appl. No.: **279,590**

[52] **U.S. Cl.** **343/705**, 343/770, 343/797, 343/846

[51] **Int. Cl.** **H01q 1/28**

[58] **Field of Search** 343/770, 771, 895, 705, 343/708, 797, 846

[56] **References Cited**

UNITED STATES PATENTS

3,366,963	1/1968	Coff	343/895
3,015,101	12/1961	Turner et al.	343/895
3,641,578	2/1972	Spanos et al.	343/773
3,701,157	10/1972	Uhrig	343/708

Primary Examiner—Eli Lieberman

[57] **ABSTRACT**

A broadband VHF/UHF antenna exhibiting a hemispherical radiation pattern comprising four orthogonally positioned radiating elements and means for feeding the elements in phase quadrature. Each element includes a vertical blade portion and a capacitive loading section attached to the upper edge of the blade portion. The capacitive loading portions define at least approximately a spherical section.

6 Claims, 5 Drawing Figures

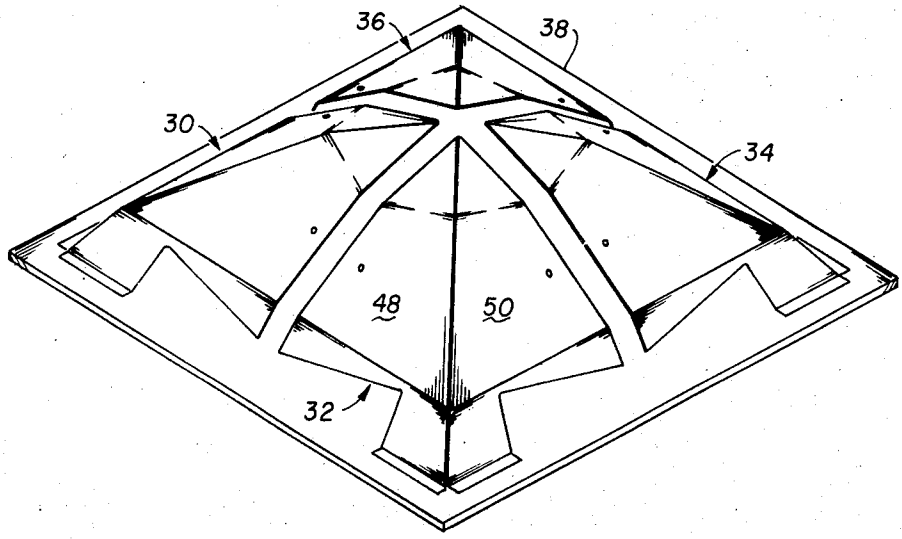

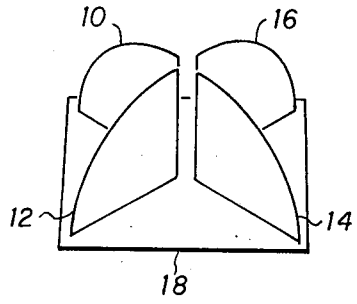

FIG. 1

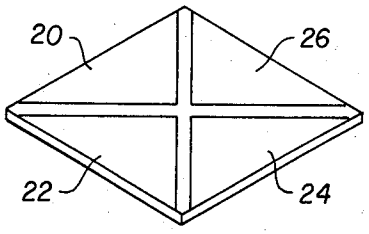

PRIOR ART

FIG. 2

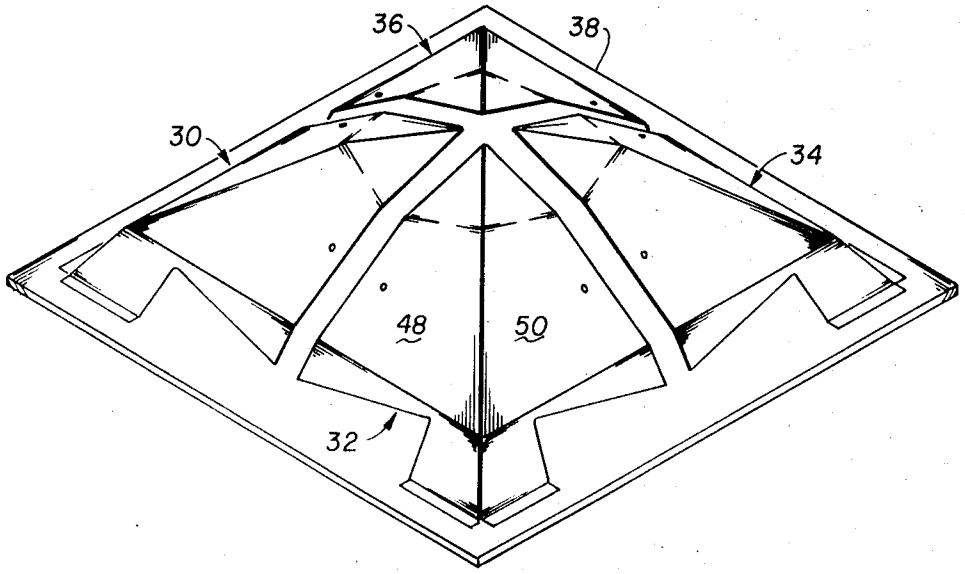

FIG. 3

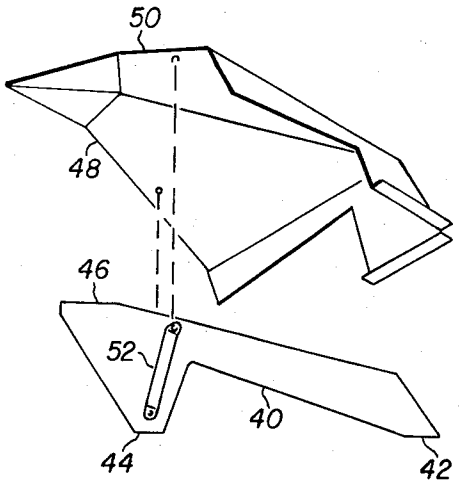
50
48
46
52
40
44
42

FIG. 4

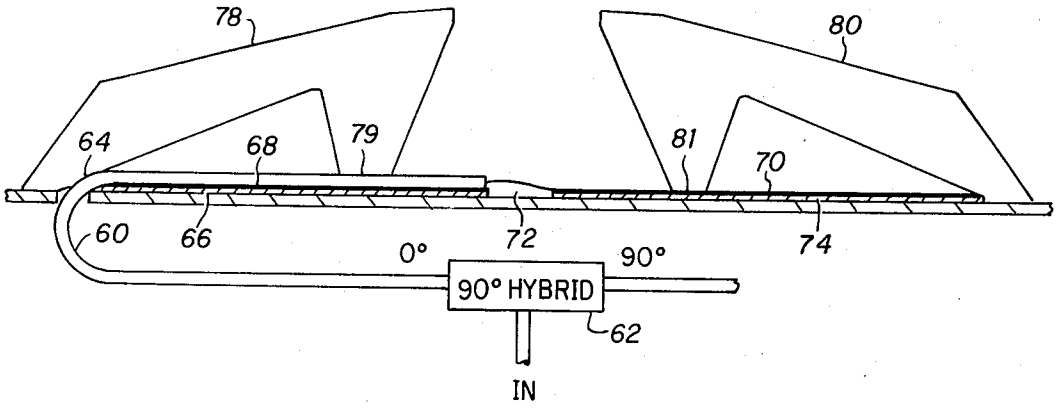
78
80
64
68
79
81
70
60
66
0°
72
90°
74
90° HYBRID
62
IN

FIG. 5

ANTENNA FOR AIRBORNE SATELLITE COMMUNICATIONS

This invention relates generally to radio antennas, and more particularly to antennas operable in the VHF and UHF ranges for airborne satellite communications.

The use of satellite communication for aircraft applications has become a reality in governmental and commercial use. Typically, such communication requires an aircraft antenna mounted on the upper fuselage, exhibiting a hemispherical coverage pattern, and operable in the VHF and UHF ranges. Conventional antennas are available for such use, but these antennas are limited in frequency bandwidth due to practical design considerations.

Accordingly, an object of the present invention is an improved VHF/UHF airborne antenna.

Another object of the invention is an improved airborne antenna for satellite communication which is operable over a wide frequency range.

Yet another object of the invention is a broadband VHF/UHF airborne antenna for satellite communication which is physically compatible with fuselage mounting.

Features of the invention include a plurality of radiating elements each comprising a vertical member having a generally arcuate upper edge portion and a capacitive loading portion defining at least approximately a spherical section which is attached to said vertical member along the arcuate upper edge. Four of such radiating elements are supportably positioned orthogonally whereby said spherical sections define at least approximately a larger spherical section. Feed means is provided for feeding said radiating element in phase quadrature.

These and other objects and features of the invention will be more readily apparent from the following detailed description and appended claims when taken with the drawing, in which:

FIG. 1 and FIG. 2 illustrate in perspective prior art antennas used for airborne satellite communication;

FIG. 3 is a perspective view of an antenna in accordance with the present invention;

FIG. 4 is an exploded view of one radiating element of the antenna of FIG. 3; and

FIG. 5 is a plan view of feed means for phase quadrature exciting the antenna of FIG. 3.

Referring now to the drawing, FIG. 1 and FIG. 2 illustrate in perspective prior art antennas used for airborne satellite communication. FIG. 1 is a turnstile antenna including four orthogonally oriented vertical elements **10, 12, 14,** and **16** which are supported on support base **18.** When fed in phase quadrature, the turnstile antenna exhibits a hemispherical radiation pattern with the radiation emanating from each of the vertical radiating elements. Such an antenna has been satisfactorily employed for relatively narrow bands such as, for example, 240–250 MHz. However, for the turnstile antenna to operate satisfactorily over a broader frequency range, 240–400 MHz, for example, the maximum vertical height for each radiating element must be increased from about five inches to over eight inches. Considering that the antenna must be mounted in the upper fuselage and enclosed by radome, it will be appreciated that such a broadband antenna is too large for satisfactory mounting on the modern jet aircraft.

The prior art crossed-slot antenna of FIG. 2 presents a minimum height profile when mounted to the fuselage of an aircraft, and a hemispherical pattern is generated across the slots between radiating element **20, 22, 24,** and **26.** However, an operationally satisfactory broadband crossed-slot antenna becomes too large in horizontal displacement for fuselage mounting.

By combining the radiating features of the turnstile antenna and the crossed array antenna, applicant has provided a broadband VHF/UHF antenna which is within the physical constraints necessary for use in airborne satellite communications. Referring to FIG. 3, one embodiment of an antenna in accordance with applicant's invention is illustrated in perspective and includes radiating elements **30, 32, 34,** and **36** which are orthogonally mounted on base plate **38.** These elements are grounded at the outer corners and are shunt fed in phase quadrature approximately halfway toward the center of the antenna by means of a balanced feed system such as, for example, a combination coaxial cable and stripline.

As seen in the exploded view in FIG. 4, each radiating element comprises a vertical blade portion **40** which is grounded at the external corner **42** and is fed by coaxial means at corner **44,** corner **42** being mounted to the support plate **38** of FIG. 3 and corner **44** being attached to metal conductor **68** and **70** of FIG. 5. The upper edge **46** of blade **40** comprises straight lines which together approximate an arcuate curve which receives by welding or other suitable means a capacitive loading portion comprising members **48** and **50.** As seen in FIG. 3, the capacitive loading portion comprising elements **48** and **50** define at least approximately a spherical section which is attached to the upper arcuate edge of the vertical blade member and along with the other capacitive loading portions of the radiating elements cooperatively define at least approximately a larger spherical section. While in this illustrative embodiment the spherical sections are approximated by adjoining planar sections, and the illustrative embodiment is satisfactorily operational, true spherical sections may be employed. Arm **52** attached to blade **40** in FIG. 4 functions solely for additional support to the cantilevered capacitive load element **48.**

As indicated above, the antenna of FIG. 3 and FIG. 4 when fed in phase quadrature exhibits a hemispherical radiation pattern which is radiated cross the gaps between the radiating elements **32, 34, 36,** and **38,** as seen in FIG. 3 and emanating outwardly from the vertical blade member **40** as illustrated in FIG. 4. Advantageously, the capacitive loading provided by the spherical sections increases the effective height of each blade member without the necessity for physically enlarging the height. This advantage provided by the present invention allows the broadband antenna to be mounted on the upper fuselage of an aircraft within the physical constraints allowed therefor.

The method of exciting the radiating elements in phase quadrature as illustrated in the plan view of FIG. 5 is conventional and well known in the art. An input signal is applied to a 90° hybrid which provides two output signals at 90° phase separation, as shown. Referring to the 0° phase output, coaxial line **60** connects hybrid **62** to a coaxial line positioned on stripline **64** with the outer conductor of coaxial line **64** electrically connected to the metal conductor **68** of the stripline. A like

stripline **70** is positioned in alignment with stripline **66** with a gap **72** separating the two striplines. Coaxial line **64** terminates at gap **72** and the center conductor thereof is electrically connected to the metal conductor **74** of stripline **70,** thereby causing a 180° phase reversal between the signal in stripline **66** and the signal in stripline **70.**

Diametrically opposed blades **78** and **80** are mounted above striplines **66** and **70,** respectively, and are electrically interconnected therewith whereby blade **78** is excited at the 0° phase, for example, while blade **80** is energized at 180° phase. It will be noted that blades **78** and **80** contact the two striplines at points **79** and **81** away from gap **72.** The exact point at which the blade contacts the stripline is a variable parameter used for impedance matching of the blade to a stripline. Similar striplines, not shown, are employed with the 90° output from hybrid **62** to feed the other pair of radiating elements of the antenna.

An antenna in accordance with the present invention provides hemispherical coverage over a wide frequency range while being compatible with the physical constraints requisite in mounting in the fuselage of an aircraft. While the invention has been described with reference to a specific embodiment, the description is illustrative of the invention and is not to be construed as limiting the invention. Various modifications and changes may occur to those skilled in the art without departing from the spirit and scope of the invention as defined by the appended claims.

I claim:

1. A broadband VHF-UHF airborne antenna for satellite communication comprising four radiating elements, a support base, said radiating elements mounted orthogonally on said support base, each of said radiating elements including a vertical member having an upper edge portion and a capacitive loading portion defining at least approximately a spherical section, said capacitive loading portion being attached to said vertical member along said upper edge portion, said capacitive loading portions of said radiating elements cooperatively defining a larger, at least approximately spherical section, and feed means for electrically feeding said radiating element in phase quadrature.

2. An airborne antenna as defined in claim **1** wherein said feed means comprises a 90° hybrid and stripline means for feeding said radiating elements at 0°, 90°, 180°, and 270°.

3. An airborne antenna as defined in claim **1** wherein said upper edge portion is generally arcuate in configuration.

4. A radiating element for use in a combination turnstile and crossed-slot airborne satellite communication antenna comprising a vertical planar member having an upper edge portion, a generally triangularly shaped capacitive loading portion defining at least a section of a spherical surface, and means for attaching said capacitive loading portion to said vertical member along said upper edge portion.

5. A radiating element as defined in claim **4** and including feed means attached to said vertical member for energizing said element.

6. A radiating element as defined by claim **4** wherein said upper edge portion is generally arcuate in configuration.

* * * * *