United States Patent [19]

David et al.

[11] **3,804,452**

[45] **Apr. 16, 1974**

[54] **LIFTING GRAPPLE**

[75] Inventors: **Pierre Yvon David; Joel M. Charles,** both of La Valette; **Maurice Robert Fourtier,** Cros de Cagnes, all of France

[73] Assignee: **Etat Francais represents far le Minister d'Etat charge de la Defence Nationale-Delegation Ministerielte fam l'Arnement,** Paris, France

[22] Filed: **Aug. 8, 1972**

[21] Appl. No.: **278,797**

[52] **U.S. Cl.** ..... **294/88,** 294/86 R, 294/106

[51] **Int. Cl.** **B66c 3/16**

[58] **Field of Search** ..... 294/1 R, 86 R, 88, 106, 294/70, 69; 37/182, 183 R, 187, 188; 214/147 R, 147 G, 653, 654, 656

[56] **References Cited**

UNITED STATES PATENTS

3,693,274	9/1972	Piccagli	37/187
2,875,913	3/1959	Gohrke et al.	214/654
3,268,092	8/1966	Hainer et al.	214/147 G X
3,441,155	4/1969	Norton	214/147 G X
3,589,766	6/1971	Bormioli	294/106

Primary Examiner—Evon C. Blunk
Assistant Examiner—Johnny D. Cherry
Attorney, Agent, or Firm—Eric H. Waters

[57] **ABSTRACT**

A lifting grapple composed of at least three fingers pivoted on a central pillar, each finger comprising at least two articulated phalanges. The fingers are arranged at 120° from each other on the central pillar which is connected to a lifting tackle. The motion of the phalanges is controlled by stretcher screws acting on ties connected to the phalanges. When the fingers are folded or retracted, the lower end of the central pillar is clear and a foot lever located on the lower end automatically controls the closing of the grapple when the foot lever comes into contact with a load to be lifted.

6 Claims, 3 Drawing Figures

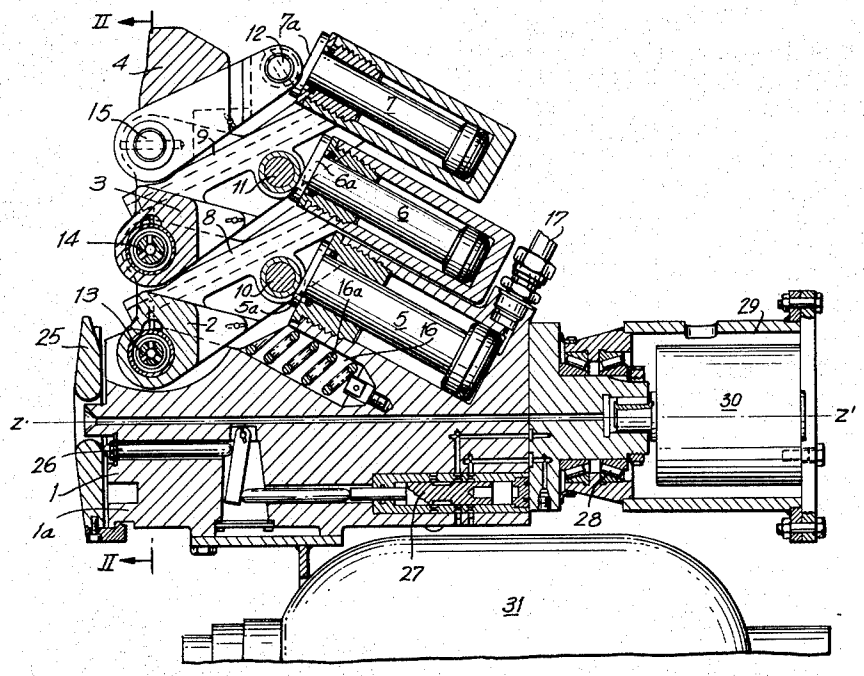

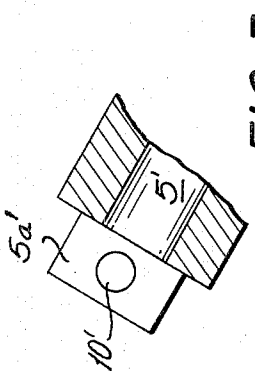
5a'
5'
10'

FIG. 3

Z'
29
30
28
17
31
27
7
6
5
16
7a
6a
16a
12
11
10
5a
8
2
9
4
15
3
14
13
25
26
1
1a
Z
II
II

FIG. 1

FIG. 2

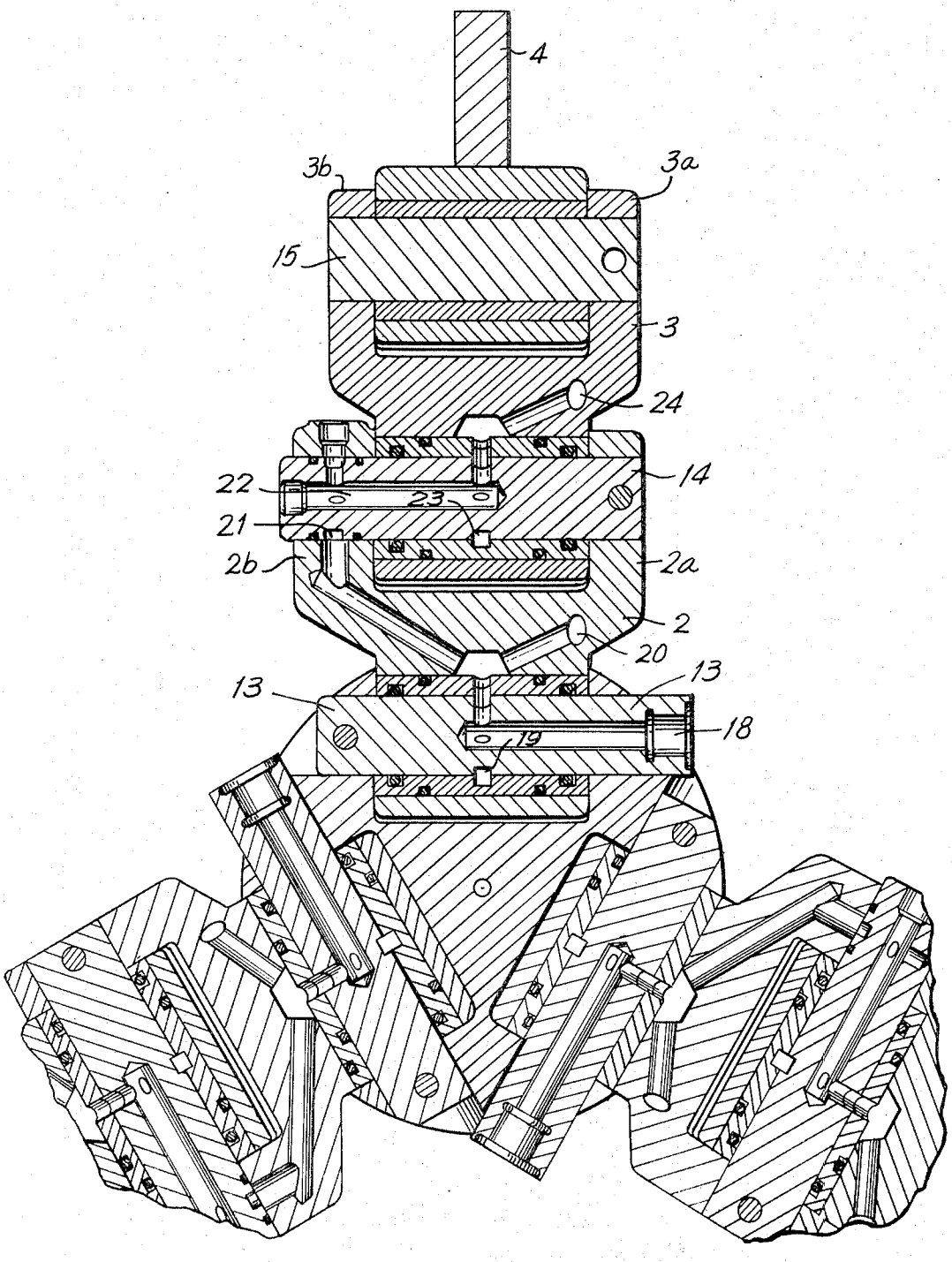

LIFTING GRAPPLE

FIELD OF INVENTION

The present invention relates to grapples for lifting tackle.

SUMMARY OF INVENTION

A grapple provided in accordance with the invention is constituted by three or more jointed fingers. Each finger is composed of several parts called phalanges, numbering at least two, which are articulated to each other.

Each phalange is rotatable. The rotation of each phalange is controlled by means of a hydraulic stretcher screw fitted with a pusher rod, such stretcher screw being firmly connected to the phalange ahead of it.

The stretcher-screw pusher rods act on levers firmly connected to each phalange and serving as supports to the stretcher screws. An oil feed for each stretcher screw can be effected through channels hollowed out in the lever arms.

One result of the present invention is a wide-span grapple of large capacity. For example, with a grapple each of whose fingers is composed of three phalanges each able to rotate 40°, a total rotation of 120° is obtained for each finger.

One of the advantages of this grapple, as will be shown, lies in the fact that the fingers can be wholly retracted above the lower end of the permanent support connecting the fingers to the lifting device. This allows the fingers to take up bulky loads while enclasping the same.

Another advantage lies in the fact that the length of the stretcher-screw piston rods is kept within a short limit due to the reduced displacement of each phalange.

Each stretcher screw can thus exert a considerable force independently of the effort of the other stretcher screws and such force is multiplied by virture of the lever arms on which the stretcher-screw thrust is exerted.

A further advantage, of great practical importance, is that the stretcher screws are fed without using any flexible piping, thus allowing the use of a working fluid at high pressure (500 bars, for example).

The fingers of the grapple of the invention can exert considerable forces such as, for example, of the order of 160 kilonewtons, allowing them to dig into compact soils in the role of dredges or to restore off-centered loads back to the middle of the grapple.

Some examples of application of a grapple of the invention are the fitting of a dredge appliance attached rigidly to the end of a hydraulic grab-bucket arm or the fitting of a lifting tackle for hoisting boats out of the water.

The different characteristics and advantages of the invention will be better understood from the following description of a preferred embodiment given by way of non-limitative example and to be taken in conjunction with the attached drawings.

BRIEF DESCRIPTION OF DRAWINGS

In the drawing:

FIG. 1 illustrates a vertical cross-sectional view of a portion of a grapple according to one embodiment of the invention;

FIG. 2 is a horizontal cross-sectional view taken along line II—II of FIG. 1;

FIG. 3 illustrates a modification of a portion of the grapple of FIGS. 1 and 2.

DETAILED DESCRIPTION

FIG. 1 illustrates an upright pillar 1 of a grapple to be attached to a lifting tackle. Such pillar having vertical axis Z—Z is attached by an articulated suspension around three trirectangular studs, for example, to the end of a hydraulic grapple bucket for the purpose of lifting boats out of the water in accordance with a device which is the object of separate patent application, Ser. No. 278,798 filed Aug. 8, 1972. This use is not, of course, exclusive and the grapple accordance to the invention can serve also in various other applications.

The grapple illustrated is constituted of three jointed fingers at intervals of 120°. To simplify the drawing only one of the fingers, located on the sectional plane, is completely illustrated the others being broken away. Each finger is composed of three articulated phalanges **2, 3,** and **4** and three hydraulic stretcher screws **5, 6** and **7.**

The shell of stretcher screw **5** is connected firmly with pillar **1.** The shell of stretcher screw **6** is carried by a pillar **8** connected firmly with phalange **2** and the shell of stretcher screw **7** is carried by a pillar **9** connected firmly with phalange **3.**

Phalange **2** is pivoted about a stud **13** rotating within two casings carried by pillar **1.** Phalange **3** is pivoted about a stud **14** rotating within two casings **2***a* and **2***b* firmly connected with phalange **2.** Phalange **4** is articulated about a stud **15** rotating within two casings **3***a* and **3***b* firmly connected with phalange **3.**

The supports **8** and **9** are each formed of two arms respectively extending from the casing **2***a*, **2***b* and **3***a*, **3***b*. Between the two arms of support **8** a cylindrical tie **10** is placed which is acted upon by the pusher rod **5***a* of the stretcher screw **5.** Similarly, between the two arms of support **9,** a cylindrical tie **11** is placed which is acted upon by the pusher rod **6***a* of the stretcher screw **6.** Phalange **4** is also extended by a lever formed of two arms carrying a cylindrical tie **12** which is acted upon by the pusher rod **7***a* of the stretcher screw **7.**

In the retracted position illustrated in FIG. **1,** the ties **10, 11** and **12** are slightly off center relative to the axis of pusher rods **5***a*, **6***a* and **7***a*. The pusher rod sizes are such that each phalange can traverse a 40° sector and, when the phalange is fully spread and the thrust is maximum, the ties **10, 11** and **12** are located in the extension of the pusher-rod studs.

Phalange **4** constituting the free end of the finger shown in FIG. **1** has a shape equivalent to the use to which it is to be put such as, for example, for gripping a sphere serving for boat raising. This shape can, of course, vary according to the particular uses intended. For example, phalange **4** can be pick-axe shaped in the case of a grapple intended to act as a dredge.

The stretcher screws illustrated in FIG. **1** constitute single-acting tackle. The return of the phalanges into the retracted or folded position is effected by means of springs. Reference **16** indicates a bed hollowed into the body of pillar **1** for the return spring **16***a* for finger **2.** The return springs for fingers **3** and **4** do not appear in the drawing.

As a variant, stretcher screws **5, 6** and **7** can be double-acting tackle, with their piston rods (e.g., **5'** in FIG.

3) articulated around associated studs (e.g., stud **10'** in FIG. 3) carried by piston skirts (e.g. skirt *5a'* in FIG. 3). Also a rod can be used to pivotably connect the skirts and studs.

The oil at very high pressure, of the order of 500 bars, reaches stretcher screw **5** through the rigid channel **17.**

FIG. 2 illustrates in horizontal cross-section the various portions of the grapple.

This figure clearly shows the beds arranged at 120° intervals in pillar **1** for receiving the three bolts **13.** Also shown are the casings *2a*, *2b* extending from phalanx **2** and supporting stud **14,** and the casings *3a*, *3b* extending from phalanx **3** and carrying stud **15.**

The oil under pressure feeds through the rigid piping **18** into the stud **13.** It is distributed into a circumferential groove **19** from which it travels into a channel **20** hollowed into the thickness of phalange **2.** This channel extends into the thickness of the arm **8** (FIG. **1**) and feeds the stretcher screw **6.**

Channel **20** communicates through a groove **21** with a channel **22** hollowed into stud **14,** which ends in a groove **23** from which the oil travels into channel **24** extending into arm **9** (FIG. **1**) thereby feeding stretcher screw **7.**

As shown in FIG. **1,** when in retracted position, the fingers are located wholly along a plane (which is actually a horizontal plane) passing through what is the lower end 1a of pillar **1.** Thus, that end is clear in the illustrated circumstances and the fingers are no impediment to an approach to an object to be lifted.

This end 1a carries a foot pedal **25** which, when put into contact with the load to be lifted, acts on a pusher rod **26.** Said pusher rod opens an oil distributor **27** automatically governing the closure of the grapple around the load-gripping mechanism.

The central pillar **1** is fitted by means of a taper bearing **28** into a hollow support **29** attached, for example, to the end of the hydraulic grab-bucket arm. A hydraulic engine **30** is seated in support **29** to drive the rotating grapple which allows the load to be slewed.

Each finger is independently fed with oil under pressure through an oleo-pneumatic accumulator **31** of about 10 liters capacity. The three accumulators are affixed to the periphery of the central pillar **1,** between the fingers sites.

Clearly, without exceeding the scope of the invention, various modifications can now be foreseen by one skilled in the art, based on the device described above by way of example.

What is claimed is:

1. A grapple comprising a central pillar and a plurality of extendible and retractable fingers pivotably coupled to said central pillar, each said finger including at least two pivotably connected phalanges, studs pivotably supporting respective of the associated phalanges such that the phalanges extend in series one after the other from said central pillar, the first stud in the series being supported in the central pillar and the other of the studs being supported by respective of the phalanges, pressure responsive stretcher screws, one for each phalange, for controlling the positions of the phalanges, the pressure screw acting on the phalange supported on the central pillar being fast with said central pillar, each of the phalanges except the last in the series including a support on which is mounted the stretcher screw controlling the next sequential phalange, each support including two parallel arms and a tie therebetween on which the action of the stretcher screw manipulating the associated phalange is exerted, and pressure fluid feed means for the stretcher screws including channels in the studs communicating through circumferential grooves provided in the studs with channels provided within said arms supporting said screws.

2. A grapple as claimed in claim **1,** wherein said central pillar has a vertically disposed axis and wherein, when in retracted condition, the phalanges are located in extension of each other in a plane perpendicular to the vertical axis of the central pillar and are located wholly above the lower end of the said central pillar.

3. A grapple as claimed in claim **1,** wherein the stretcher screws are single-acting and include sliding pusher rods acting against the associated ties and comprising recall springs acting on the phalanges to urge the same to retracted position.

4. A grapple as claimed in claim **1,** wherein the stretcher screws are double-acting and include pistons pivotably connected to the associated ties.

5. A grapple as claimed in claim **1,** wherein each phalange except the last in the series has the shape of a casing in which the stud associated with the following phalange rotates.

6. A grapple as claimed in claim **1** comprising a control foot lever and a pusher rod and wherein the lower end of the central pillar carries said control foot lever, which when pushed against a load to be handled, acts on said pusher rod for governing the fluid feed means.

* * * * *

UNITED STATES PATENT OFFICE

CERTIFICATE OF CORRECTION

Patent No. 3,804,452 Dated April 16, 1974

Inventor(s) Pierre Yvon David et al.

It is certified that error appears in the above-identified patent and that said Letters Patent are hereby corrected as shown below:

The assignee should read

-- Etat Francais represente par le Ministre d'Etat Charge de la Defense Nationale-Delegation Ministerielle pour l'Armement, Paris, France --.

Signed and sealed this 24th day of September 1974.

(SEAL)
Attest:

McCOY M. GIBSON JR.
Attesting Officer

C. MARSHALL DANN
Commissioner of Patents

FORM PO-1050 (10-69)

USCOMM-DC 60376-P69
* U.S. GOVERNMENT PRINTING OFFICE : 1969 O—366-334.