US 20150192142A1

(19) United States

(12) Patent Application Publication

Philippart

(10) Pub. No.: US 2015/0192142 A1

(43) Pub. Date: Jul. 9, 2015

(54) **PASSIVE SHUTDOWN SEALING DEVICE FOR A SYSTEM OF SHAFT SEALS IN A REACTOR COOLANT PUMP SET**

(71) Applicant: **AREVA NP**, Courbevoie (FR)

(72) Inventor: **Olivier Philippart**, Valenciennes (FR)

(21) Appl. No.: **14/409,836**

(22) PCT Filed: **Jun. 25, 2013**

(86) PCT No.: **PCT/FR2013/051473**

§ 371 (c)(1),
(2) Date: **Dec. 19, 2014**

(30) **Foreign Application Priority Data**

Jun. 25, 2012 (FR) 1256005

Publication Classification

(51) **Int. Cl.**
F04D 29/14 (2006.01)
F04D 27/00 (2006.01)

(52) **U.S. Cl.**
CPC ***F04D 29/146*** (2013.01); ***F04D 27/001*** (2013.01); ***F04D 27/008*** (2013.01)

(57) **ABSTRACT**

The present invention concerns a passive shutdown sealing device (**20**) for a primary motorised pump unit comprising: a split sealing ring (**23**) having an inactivated position and an activated position; a separator (**27**) made from a fusible material capable of changing state from a temperature threshold, called state change threshold, said separator (**27**) holding said split sealing ring (**23**) in the inactivated position of same when the temperature of the device (**20**) is lower than said state change temperature threshold; said device being characterised in that it comprises circular elastic means (**22**) positioned around the split sealing ring (**23**), said elastic means (**22**) being designed to bring said sealing ring (**23**) into the activated position of same when the temperature is greater than or equal to the state change threshold value of said separator (**27**).

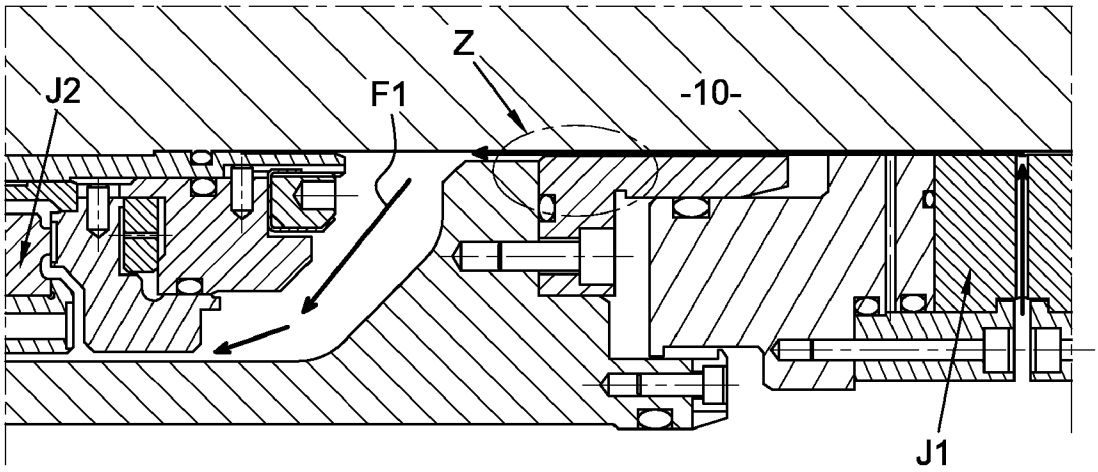

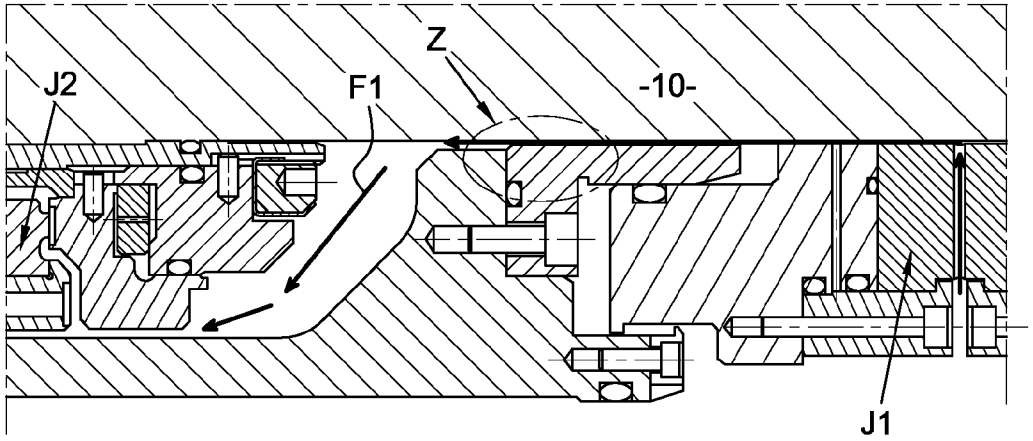

Fig. 1

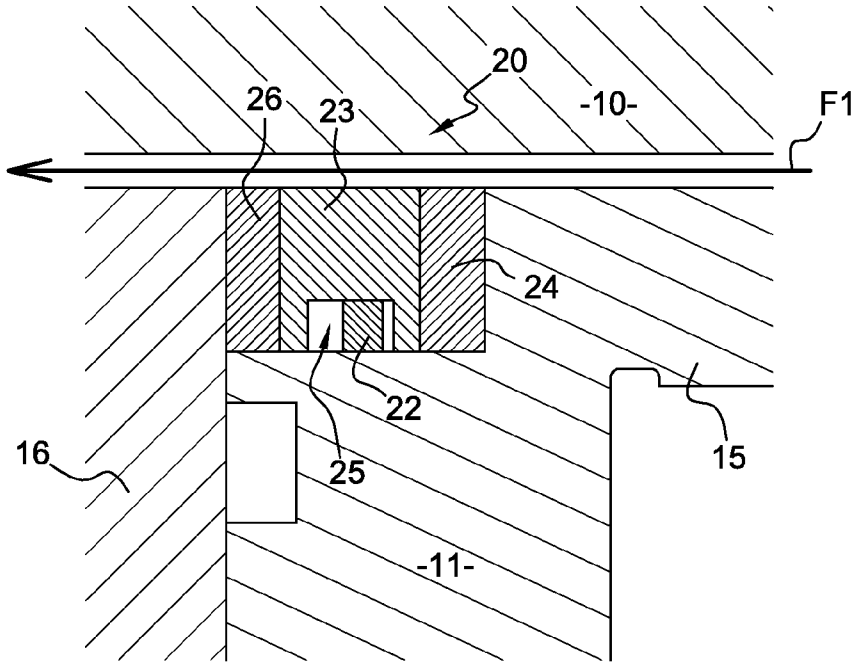

Fig. 2

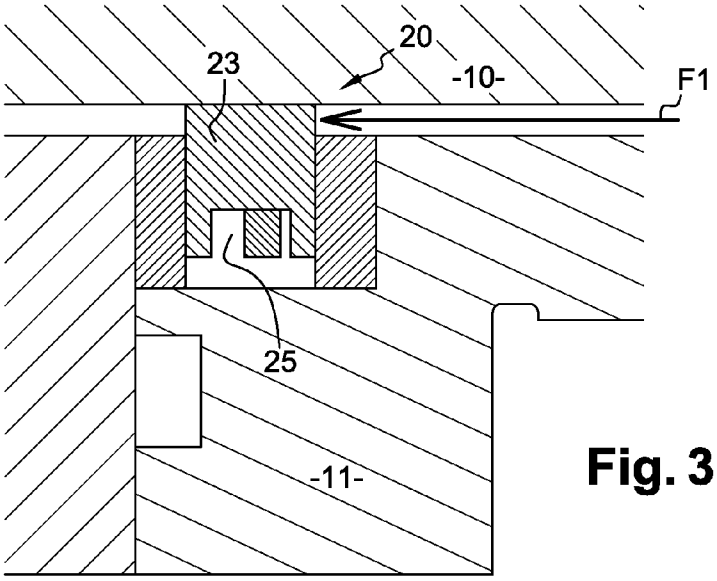

Fig. 3

Fig. 4

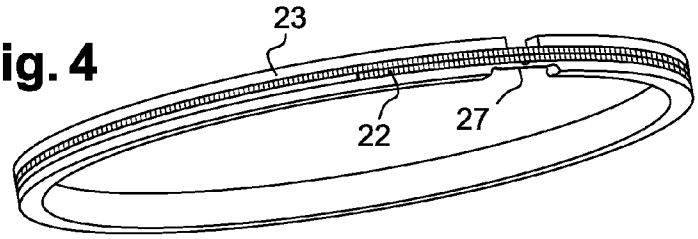

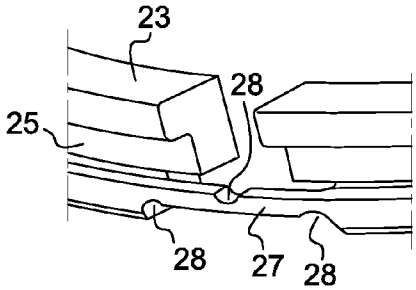

Fig. 5

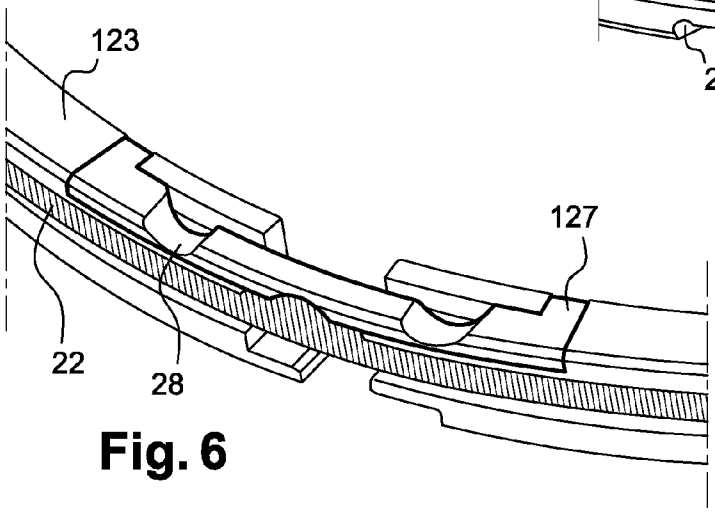

Fig. 6

PASSIVE SHUTDOWN SEALING DEVICE FOR A SYSTEM OF SHAFT SEALS IN A REACTOR COOLANT PUMP SET

TECHNICAL FIELD

[0001] The field of the invention is the field of reactor coolant pump sets for nuclear pressurised water reactors (PWR).

[0002] The invention relates more particularly to a passive shutdown sealing device (SSD) capable of controlling a reactor coolant leak resulting from a failure in the system of seals present on the reactor coolant pump set.

STATE OF THE ART

[0003] Shutdown sealing devices (SSD) have been developed in new generation nuclear pressurised water reactors to cope with a failure of the reactor coolant pump set seal system following an accidental situation, called Station Black Out.

[0004] Thus, in this accident situation and after the reactor coolant pump has stopped, shutdown sealing devices must be capable of controlling and stopping a reactor coolant leak resulting from a failure of the reactor coolant pump set seal system.

[0005] Conventionally, this type of device is activated by an auxiliary source (for example such as a pressurised nitrogen circuit) and triggering is controlled by information output by the reactor instrumentation control, in case of losses of the cooling sources of the reactor coolant pump set.

[0006] A passive shutdown sealing device has been developed for which no auxiliary activation system, and no output of triggering information from the reactor instrumentation control are necessary in order to eliminate the need to use an activation source. Such a passive shutdown sealing device is disclosed in document WO 2010/068615.

[0007] However, the sealing device disclosed is a cumbersome device and its installation in a sealing system of a reactor coolant pump set is relatively complex.

PRESENTATION OF THE INVENTION

[0008] In this context, the invention proposes to improve such a sealing device in order to reduce its size and thus its installation on shaft seal systems of reactor coolant pump sets in service.

[0009] To achieve this, the invention discloses a passive shutdown sealing device for a reactor coolant pump shaft seal system comprising:

[0010] a split sealing ring with an inactive position and an active position;

[0011] a separator made from a fusible material capable of changing state above a temperature threshold called the state change threshold, said separator holding said split sealing ring in its inactive position when the temperature of the device is less than the threshold state change temperature;

said device being characterised in that it comprises circular elastic means positioned around the split sealing ring, said elastic means being adapted to bring said sealing ring into its active position when the temperature is greater than or equal to the threshold change state value of said separator.

[0012] The expression "change state" means a modification to the mechanical properties of the fusible material.

[0013] With the invention, it is possible to stop a reactor coolant leak resulting from a failure of the reactor coolant pump set seal system without requiring an auxiliary activation source.

[0014] The design of the device according to the invention enables simplified installation on architectures of reactor coolant pumps already in service.

[0015] With the device according to the invention, it is also possible to adjust the device to operating constraints of each type of nuclear reactor by adjusting the self-activation temperature of the device, and more precisely by modifying the composition of the fusible element.

[0016] It is also possible to define a first temperature threshold of the material state change starting from which the fusible material separator changes state, in other words its mechanical properties change and an activation temperature threshold of the shutdown sealing device that might be different from and greater than the threshold state change temperature, starting from which the separator can no longer resist the force applied by the elastic means, thus bringing the sealing ring into its active position.

[0017] The passive shutdown sealing device according to the invention may also have one or several of the following characteristics taken individually or in any technically possible combination:

[0018] said elastic means bring said sealing ring into its active position when the temperature is greater than or equal to the value of an activation threshold of the device, the activation threshold temperature being greater than the threshold state change temperature;

[0019] said device is adapted to form part of a system of seals of a shaft in a reactor coolant pump set in service;

[0020] said split sealing ring is made from polymer resistant to temperatures exceeding 300° C.;

[0021] said split sealing ring is made from polyetheretherketone, or a composite with a polyetheretherketone matrix containing glass or carbon fibres;

[0022] said circular elastic means apply a compression force on said split sealing ring;

[0023] said split sealing ring comprises a peripheral annular groove capable of holding said circular elastic means;

[0024] said separator made from a fusible material is capable of mechanically resisting the force applied by the elastic means up to a temperature threshold of between 80° C. and 260° C., advantageously equal to 150° C.;

[0025] said separator and the split sealing ring are made in a single-piece;

[0026] said separator may be formed by a part independent from the split sealing ring and added onto the opening of the ring by attachment means.

[0027] Another purpose of the invention is a reactor coolant pump set comprising:

[0028] a system of seals adapted to create a controlled leak forming along a leakage path formed along the shaft of the reactor coolant pump set;

[0029] a passive shutdown sealing device according to the invention adapted to at least partially close off said leakage path of said seal system when said seal system is defective and when said sealing ring is brought into its active position by said circular elastic means so as to create a controlled leak.

BRIEF DESCRIPTION OF THE FIGURES

[0030] Other characteristics and advantages of the invention will become clearer after reading the following descrip-

tion given for information and in no way limitative with reference to the appended figures among which:

[0031] FIG. **1** shows a partial view of a system of seals of a reactor coolant pump set;

[0032] FIG. **2** shows a sectional view of a passive shutdown device according to the invention in its rest position integrated into a system of seals of a reactor coolant pump set as partially shown in FIG. **1**;

[0033] FIG. **3** shows a sectional view of a passive shutdown device according to the invention in its active position integrated into a system of seals of a reactor coolant pump as shown partially in FIG. **1**;

[0034] FIG. **4** shows a perspective view of the sealing ring of the shutdown device according to the invention;

[0035] FIG. **5** is a detailed view at the slit in the sealing ring of the shutdown device according to the invention;

[0036] FIG. **6** is a detailed view at the slit in the sealing ring in a second embodiment of the shutdown device according to the invention.

[0037] For more clarity, identical or similar elements are marked with identical references in the figures.

DETAILED DESCRIPTION OF AT LEAST ONE EXAMPLE EMBODIMENT

[0038] Coolant pumps of pressurised water reactors are of the centrifugal type with vertical axis. The dynamic leak tightness at the shaft outlet **10** (FIG. **1**) is provided by a system of seals composed of three stages.

[0039] The first stage is called seal No. 1. Seal No. 1 reference J**1** is a hydrostatic seal with a controlled leak. During normal operation, a leakage flow represented by arrow F**1** forms along the shaft **10**.

[0040] In an accident situation, the coolant temperature at the entry to seal No. 1 rises very quickly to reach a value close to the temperature of the reactor coolant system, namely about 280° C. At this temperature, the performances of seal No. 1 are degraded which very quickly increases the leakage flow that can exceed 10 m^3 per hour. Passive shutdown sealing devices (SSD) are intended to block off the leakage flow F**2** in this situation downstream from seal No. 1 without using an activation source.

[0041] FIG. **1** specifically shows the leakage path F**2** along the shaft **10** between seal No. 1 J**1** and seal No. 2 (reference J**2**) located upstream from seal No. 1.

[0042] Advantageously, the SSD device **20** according to the invention is placed on the leakage path F**2** and more precisely in the zone represented by the reference Z, so as to be able to block off the leakage flow along the shaft **10** during an accident situation.

[0043] FIG. **2** more specifically shows a sectional view of the sealing device **20** according to the invention during normal operating conditions of the reactor coolant pump set, in other words when the temperature of the leakage flow is less than a predetermined threshold value.

[0044] Furthermore, FIG. **3** shows a sectional view of the sealing device in its active position, in other words during accident operating conditions of the reactor coolant pump set.

[0045] The shutdown sealing device **20** according to the invention comprises:

[0046] a split sealing ring **23** placed concentrically around the shaft **10** of the reactor coolant pump set;

[0047] elastic means **22** adapted to circumferentially stress the split sealing ring **23** in compression;

[0048] a separator **27** shown in FIGS. **4** and **5**, made from a fusible material adapted to keep said split sealing ring in its inactive position or rest position as long as the temperature of the device remains below a temperature threshold that will be defined later.

[0049] The shutdown sealing device **20** according to the invention may also comprise a first contact ring **24** formed between the bushing **15** of the seal No. 1 and the split sealing ring **23** and a second contact ring **26** located at the contact of the split sealing ring **23** and that can come into contact with the support part of the floating assembly of seal No. 1.

[0050] For example, the first contact ring **24** is made from steel or a nickel alloy. The second contact ring **26** has a chrome-plated face in contact with the sealing ring **23**. The chrome-plated coating of the face in contact with the sealing ring **23** reduces the coefficient of friction between the sealing ring **23** and the second ring **26**. If the pumps are stopped due to a power supply failure (SBO), the shutdown device **20** may be triggered by an increase in the temperature before the pump shaft is completely stopped. Consequently, such a chrome-plated coating will prevent damage to the second sealing ring **26**.

[0051] The sealing ring **23** has a peripheral groove **25** around its external periphery, the shape and dimensions of which are adapted to hold the elastic means **22**.

[0052] The split sealing ring **23** is held in its inactive position as shown in FIGS. **1** and **4**, using the fusible separator **27**. The fusible separator **27** is made from a polymer material advantageously chosen as a function of its degradation temperature and its loss of mechanical properties.

[0053] The choice of the polymer for the fusible separator and its dimensions are chosen as a function of the required degradation temperature. Advantageously, the separator **27** is characterised so as to be able to resist the force applied by the elastic means **22** up to a temperature threshold of between 80° C. and 260° C. and advantageously equal to 150° C.

[0054] In the embodiment shown in FIGS. **2** to **5**, the fusible separator **27** is in the form of a beam capable of keeping the two ends of the split sealing ring **23** in the separated position (inactive position) during normal operation of the reactor coolant pump set.

[0055] Thus, under normal operation conditions (FIG. **2**), the sealing ring **23** is held set back from the leakage path F**1**. The split sealing ring **23** is locked in this position by the fusible separator **27**.

[0056] Under accident conditions (FIG. **3**), the increase in the temperature of the leakage flow has the effect of increasing the temperature close to the shutdown device **20**, and particularly the temperature of the fusible separator **27**. When the temperature of the leakage flow reaches a threshold value called the state change threshold, predefined as a function of the nature of the fusible separator **27**, the separator degrades immediately or progressively and consequently no longer has sufficient mechanical strength to resist the circumferential compression force generated by the elastic means **22**. Loss of mechanical properties of the fusible separator and particularly the drop in the bending modulus takes place when the temperature is greater than or equal to the vitreous transition temperature of the material from which the fusible separator **27** is made.

[0057] Depending on the nature of the fusible material used, it is also possible to define a first threshold state change temperature of the material starting from which the fusible separator **27** begins its state change, in other words when its

mechanical properties are modified, and a threshold activation temperature of the shutdown sealing device starting from which the fusible separator **27** collapses because it is no longer capable of resisting the force applied by the elastic means **22**, thus bringing the sealing ring **23** into its active position.

[0058] Thus, in a first embodiment, the device **20** trips (corresponding to the threshold state change of the fusible separator **27** being exceeded) at the same time as the device is activated. In this variant embodiment, losses of mechanical properties take place almost instantaneously.

[0059] In a second variant embodiment, there is a delay between when the device is activated due to the threshold state change temperature being exceeded and when the device **20** is activated. In this variant, losses of mechanical properties take place progressively and lead to a collapse of the fusible separator **27** at a different moment and/or at a higher temperature than the threshold state change temperature.

[0060] The fusible separator **27** advantageously has notches **28** or zones in which the material is thinned, capable of guiding buckling and deformation of the fusible separator **27**. Such notches **28** can for example be used to guide deformation of the separator along the axial direction or along the radial direction of the sealing ring **23**.

[0061] According to one example embodiment shown in FIG. **5**, the notches **28** are machined at the centre and at the ends of the fusible separator **27**.

[0062] It might be necessary to provide a free space in the vicinity of the fusible separator to avoid hindering deformation of the separator so as to facilitate deformation by buckling of the fusible separator **27** and so that the shutdown device **20** is satisfactory activated. For example, this space may be a notch (not shown) in the bushing **11** of the seal No. 1 facing the circumferential position of the fusible separator **27** in the case of a radial deformation of the fusible separator **27**.

[0063] Since the sealing ring **23** is no longer held in its rest position, the force applied by the elastic means **22** surrounding the sealing means **23** modifies the diameter of the sealing ring **23** such that the sealing ring is pressed in contact with the shaft of the rotor **10**.

[0064] Thus, under accident conditions, the sealing ring **23** blocks the leakage path F**1** due to the circumferential force applied by the elastic means **22** combined with the loss of mechanical properties of the separator that no longer performs its separation function.

[0065] Secondly, the leak is blocked in addition by the autoclave effect induced by the increase in pressure upstream from the sealing device **20** in the active position.

[0066] According to one example embodiment, the sealing ring **23** of the shutdown device **20** may be made from a polymer material resistant to high temperatures (i.e. higher than 300° C.), for example such as polyetheretherketone (PEEK) or a PEEK composite containing glass or carbon fibres. The use of such a material can result in a sealing ring that changes to a rubbery state at high temperature in which it can deform to match the geometry of its environment and thus give a better sealing quality. In this embodiment, the nature of the fusible separator **27** and the nature of the body of the sealing ring **23** are the same and they are advantageously made of a single piece.

[0067] According to a second embodiment shown in FIG. **6**, the fusible separator **127** is formed from an independent part (i.e. non single-piece) of the sealing ring **123** that is added onto the opening of the ring **123**. Such a configuration means that the fusible separator **127** can be made from a material different from the material used to make the sealing ring **123** and also for which the loss of mechanical properties is sufficient so that the device can be triggered and activated starting from a given temperature threshold.

[0068] Thus, for example, the fusible separator **127** can be made from PEEK containing carbon fibres and the sealing ring **123** can be made from graphite.

[0069] This second embodiment can simplify the design of the sealing ring **123** and can form an overlap at the opening of the ring **123** so as to increase the efficiency of the seal. The fusible separator **127** may be assembled on the sealing ring **123** using various methods; preferably, the assembly is of the mortise and tenon type.

1. A passive shutdown sealing device (**20**) for a reactor coolant pump shaft seal system, comprising:

a split sealing ring with an inactive position and an active position;

a separator made from a fusible material capable of changing state above a temperature threshold called the state change threshold, said separator holding said split sealing ring in its inactive position when the temperature of the device is less than the threshold state change temperature;

circular elastic means positioned around the split sealing ring, said elastic means being adapted to bring said sealing ring into its active position when the temperature is greater than or equal to the threshold change state value of said separator.

2. The passive shutdown sealing device for a reactor coolant pump shaft seal system according to claim **1**, wherein said elastic means bring said split sealing ring into its active position when the temperature is greater than or equal to the value of an activation threshold of the device, the activation threshold temperature being greater than the threshold state change temperature.

3. The passive shutdown sealing device for a reactor coolant pump shaft seal system according to claim **1**, wherein said device is adapted to form part of a system of seals of a shaft in a reactor coolant pump set in service.

4. The passive shutdown sealing device for a reactor coolant pump shaft seal system according to claim **1**, wherein said split sealing ring is made from a polymer resistant to temperatures exceeding 300° C.

5. The passive shutdown sealing device for a reactor coolant pump shaft seal system according to claim **1**, wherein said split sealing ring is made from polyetheretherketone, or a composite with a polyetheretherketone matrix containing glass or carbon fibres.

6. The passive shutdown sealing device for a reactor coolant pump shaft seal system according to claim **1**, said circular elastic means apply a compression force on said split sealing ring.

7. The passive shutdown sealing device for a reactor coolant pump shaft seal system according to claim **1**, wherein said sealing ring comprises a peripheral annular groove capable of holding said circular elastic means.

8. The passive shutdown sealing device for a reactor coolant pump shaft seal system according to claim **1**, wherein said separator made from a fusible material is capable of mechanically resisting the force applied by the elastic means up to a threshold temperature of between 80° C. and 260° C., advantageously equal to 150° C.

9. The passive shutdown sealing device for a reactor coolant pump shaft seal system according to claim **1**, wherein said separator and the split sealing ring are made in a single-piece.

10. The passive shutdown sealing device for a reactor coolant pump shaft seal system according to claim **1**, wherein said separator may be formed by a part independent from the split sealing ring and added onto the opening of the ring by attachment means.

11. A reactor coolant pump set, comprising:

a system of seals adapted to create a controlled leak forming along a leakage path formed along the shaft of the reactor coolant pump set;

a passive shutdown sealing device according to claim **1**, adapted to at least partially close off said leakage path of said seal system when said seal system is defective and when said sealing ring is activated to create a controlled leak.

* * * * *