March 20, 1934. W. H. TURNER 1,951,851

APPARATUS FOR CLEANING, POLISHING, AND LIKE PURPOSES

Filed Aug. 27, 1932 2 Sheets-Sheet 1

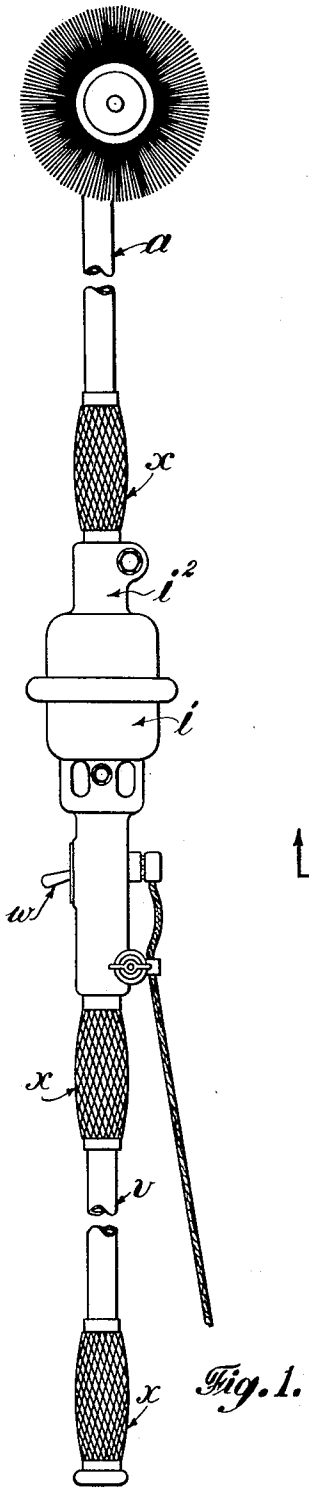

Fig. 1.

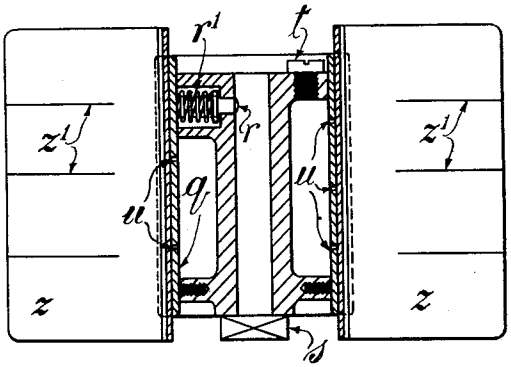

Fig. 4.

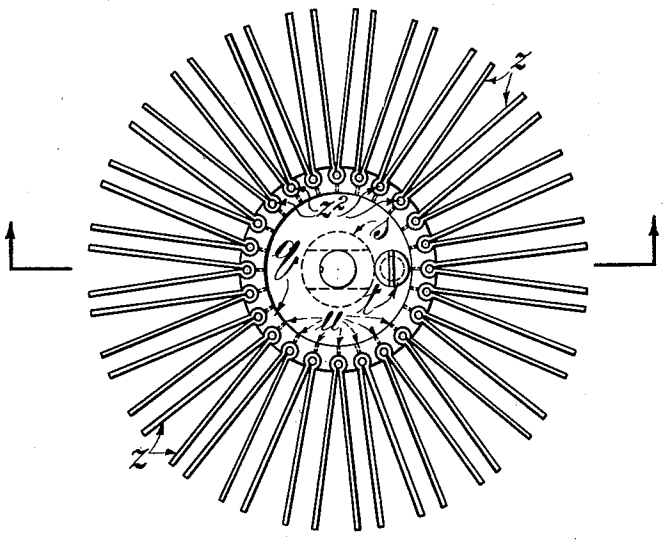

Fig. 5.

Inventor:
Walter Hiram Turner.
By his Attorney: Walter Gunn

March 20, 1934. W. H. TURNER 1,951,851

APPARATUS FOR CLEANING, POLISHING, AND LIKE PURPOSES

Filed Aug. 27, 1932 2 Sheets-Sheet 2

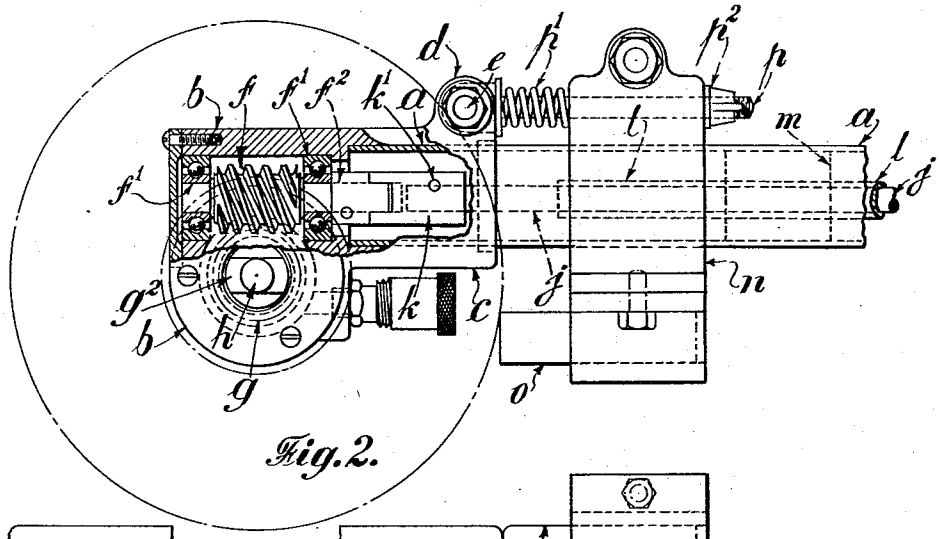

Fig.2.

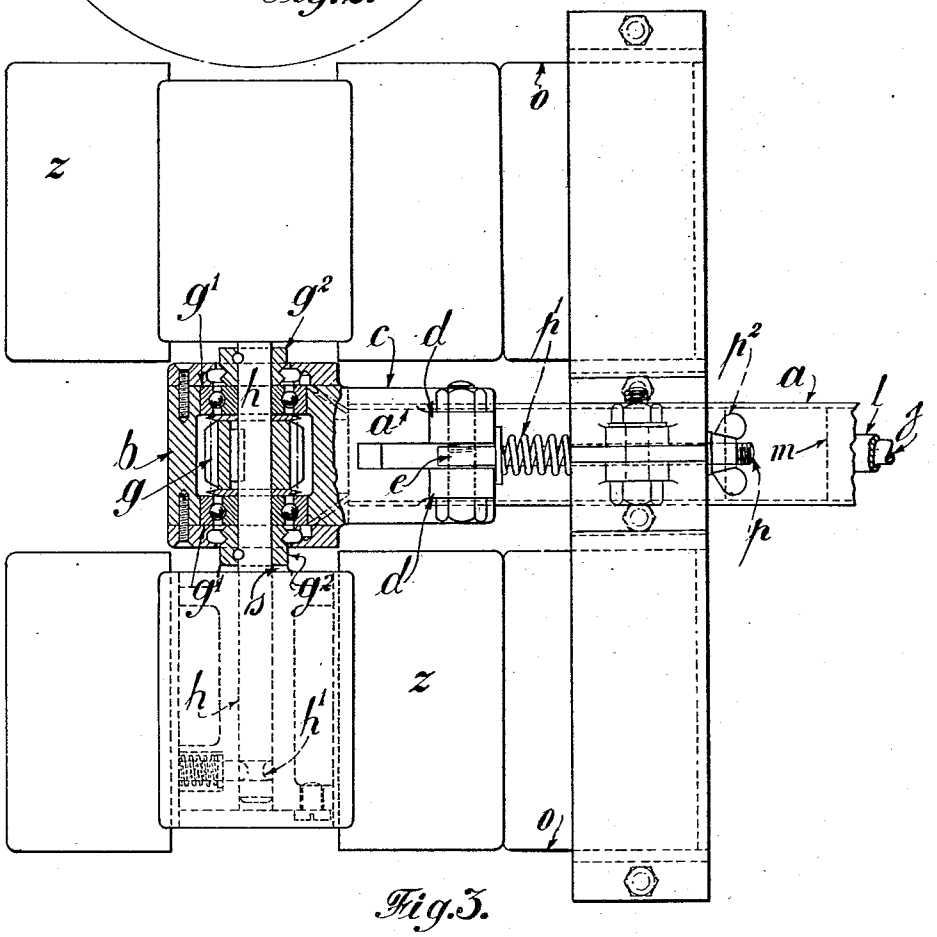

Fig.3.

Inventor:
Walter Hiram Turner.
By his Attorney: Walter Gunn

Patented Mar. 20, 1934

1,951,851

UNITED STATES PATENT OFFICE

1,951,851

APPARATUS FOR CLEANING, POLISHING, AND LIKE PURPOSES

Walter Hiram Turner, Chorlton-cum-Hardy, Manchester, England

Application August 27, 1932, Serial No. 630,628
In Great Britain October 3, 1931

4 Claims. (Cl. 15—23)

This invention relates to an improved apparatus for cleaning, polishing and like purposes.

The object of the invention is an improved portable electrically driven apparatus suitable for such purposes as the cleaning and polishing of shop windows, floors, walls and ceilings, and other polished surfaces, as well as for similar domestic purposes.

According to the invention, the improved portable apparatus comprises a staff or handle and mounted thereon an electric motor, a head or spindle for carrying rotary polishing devices and driving means connecting the head or spindle to the motor, characterized in that the motor and the head or spindle are placed at opposite ends of the staff or handle so that in use the motor provides "balance" for the head or spindle.

In the accompanying drawings:—

Fig. 1 is a side elevation of one example of portable apparatus made in accordance with the invention.

Fig. 2 is an enlarged part sectional detail elevation of the head part of the apparatus shown in Fig. 1.

Fig. 3 is a plan of Fig. 2 in part section.

Figs. 4 and 5 are detail views, sectional plan and an elevation respectively, of one example of mop for use with the portable apparatus.

As illustrated, the apparatus comprises a steel tube *a* which may be of fibre or other suitable material about 4 ft. 6 inches long and about 1 inch diameter, such tube forming the staff or handle. Other lengths of handle will, of course, be provided when required. On one end of the tube is an aluminium gear box *b* having a tubular extension *c* fitting over the end of the tube, the extension being split and provided with lugs *d* and a clamping bolt *e* by which it can be secured to the tube.

Within the gear box is arranged a worm *f* and worm wheel *g*, the latter being journaled on ball bearings g^1 and having a spindle *h* extending at each end outside the gear box to receive rotary polishing devices. The worm *f* is mounted on ball bearings f^1 in the gear box, the spindle f^2 of the worm extending into the socket for the tube and being squared at such end for a driving connection. The worm wheel spindle *h''* is provided at each side of the casing with collars *h* having facial driving dogs g^2. The end of the spindle *h* is formed with annular groove h^1 which is adapted to be engaged by a spring plunger on the mop, as described later, for holding the mop on the spindle in engagement with the driving dogs g^2. Alternatively the spindle may be tapered and provided with a pin which is adapted to engage a helical or inclined slot in the socket of the rotary polishing buffs or other devices, the direction of inclination of which slot is such that the rotation of the spindle tends to draw on the rotary polishing buffs or cleaning devices, which latter may easily be removed by a part rotational movement to free them from the pin, whereupon they can be drawn off the spindle.

On the other end of the tube *a*, and coaxial therewith, is mounted a small electric motor *i* of about one sixteenth horse power, the armature of which is coaxial with the tube and the casing of which is formed with a tubular extension i^2 similar to that of the gear box, fitting over and clamping on to the end of the tube *a*.

Within the tube is a driving shaft *j* of $\frac{3}{16}$th inch diameter, having at each end a connecting piece *k* fitted on to and secured by pins k^1 to the ends of the shaft, the connecting pieces having square section sockets in their ends to fit on to the spindle of the worm and of the motor armature respectively. The driving shaft is enclosed in a sleeve *l* which is supported at two places intermediately of its length by bushes *m* fitting into the tube and suitably secured therein as by screws from the outside. The ratio of the worm and worm wheel drive is six to one the worm having three teeth.

As shown dotted in Figs. 2 and 3, an attachment may be provided consisting of a bracket *n* slidably mounted on the tube *a* and secured to the bracket are holders for blocks *o* of polishing powder. The bracket is adjustably positioned on the shaft *a* by an eyebolt *p* on the clamping bolt *e* passing through a lug on the bracket and carrying a spring *p'* and thumb nut p^2. In place of the blocks *o*, a pad may be provided, adapted to hold liquid polishing medium and the holder for the pad may be made a reservoir for the polishing medium to keep the pad saturated.

As shown in Figs. 4 and 5, the mop consists of a hollow core *q* on the periphery of which are a number of longitudinal grooves of key-hole shape. In the core *q* is a spring-pressed plunger *r* with a loading spring r^1, the plunger being positioned so as to engage the groove h^1 in the spindle *h* and the core being formed with dogs *s* to engage the dogs g^2. In the core is a filling screw *t* for filling it with a polishing medium, holes *u* being provided in the periphery of the core for egress of the material to the mop or mop parts. The fins *z* of the mops may be made from felt, hair, fibre, rubber, leather, velvet, cotton fabric or the like, and may

be plain for flat surfaces, or split as at z^1 for mouldings, etc. They are held in position by wires or pins z^2 in folded-over parts of the fins.

For convenience of handling the apparatus, a tubular extension or handle v is provided, fitted into the other end of the motor casing in like manner to the fitting of the tube a. A control switch w is also provided incorporated in the motor casing while hand grips x are provided at suitable points on the tube a and on the handle v.

The form of buff or polishing device herein described and illustrated is not limited to use with the portable apparatus herein described.

In use, the apparatus is easily handled for any such purpose as the cleaning of shop windows, mirrors, tiled walls, metal work fixtures, floorings, ceilings, paint work and polished surfaces in general, by reason of the "balance" given to it by positioning the working head and the electric motor at substantially opposite ends of the staff or handle. The mop is adapted to rotate in a direction which tends to make it climb the window, wall, or the like.

A control switch for the motor will preferably be provided on the handle at a convenient position for its operation and the parts of the apparatus will as far as possible be covered with an insulating coating of vulcanite or other suitable material to protect the operator from electric shocks in case of an electrical fault in the motor or switch or wiring thereof, and will be earthed by an earth wire, combined in the flex.

The invention is not limited to the examples above described, for instance the shaft or handle may be made in sections or so as to receive one or more extensions where required and the gear box of the head may incorporate a variable speed gear so that the speed of revolution of the buff or polishing device may be altered to that most suitable for any particular purpose. On the other hand a variable or change speed gear box at the motor or a suitable speed-control electric switch may be provided for the motor.

What I claim is:—

1. In a portable apparatus for cleaning, polishing and like purposes comprising a staff, an electric motor mounted thereon near one end, a driving shaft within the staff connected to the electric motor and a gear box with transverse shaft for rotary buffers mounted on the other end of the staff from the electric motor incorporating driving gear coupling the transverse shaft to the driving shaft, the driving gear comprising a short driving shaft mounted in its own bearings and having a clutch coupling to the main driving shaft, the gear box having a hollow extension or socket with clamping lugs to fit over the end of the staff and a cylindrical recess opposite to and coaxial with the socket forming a housing for anti-friction bearings for the short driving shaft, the recess being separated from the socket by an inwardly projecting flange forming both a thrust abutment for one of the anti-friction bearings and a locating abutment for the end of the staff.

2. In a portable apparatus according to claim 1 a holder for blocks of polishing material to contact with the buffers, the holder being slidably mounted on the staff, an eyebolt carried by the clamping bolt of the socket and passing through the holder, a compression spring on the eyebolt between the holder and the socket and a wing nut on the end of the eyebolt.

3. In a portable apparatus according to claim 1, a transverse shaft formed with driving lugs adjacent to the gear box and an annular groove, and rotary buffers mounted on the transverse shaft having hubs provided at one end with co-acting driving lugs to engage those on the shaft and a spring projected plunger to engage the annular groove.

4. In a portable apparatus according to claim 1, a transverse shaft formed with driving lugs adjacent to the gear box and an anular groove, and rotary buffers mounted on the transverse shaft having hollow hubs provided at one end with co-acting driving lugs to engage those on the shaft and a spring projected plunger mounted in a solid part of the hub to engage the annular groove, the hub having a filling opening, a screw plug to close same and outlet openings to the periphery of the hub.

WALTER HIRAM TURNER.