Oct. 16, 1962 H. E. WILLIAMS 3,059,206

CABLE CONNECTOR CLAMP

Filed July 24, 1959 3 Sheets-Sheet 1

Fig. 1

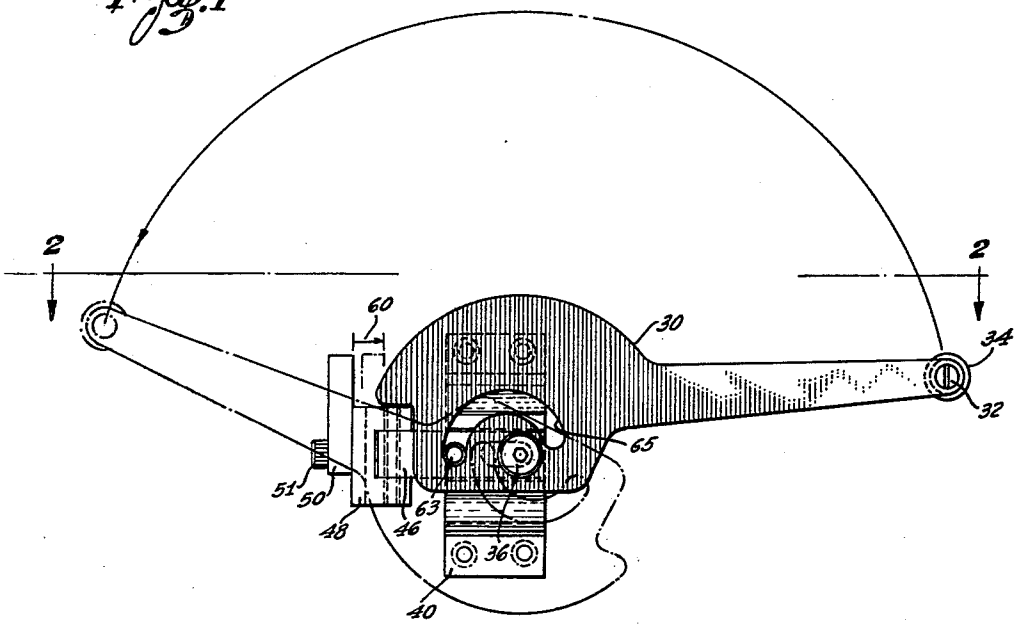


Fig. 2

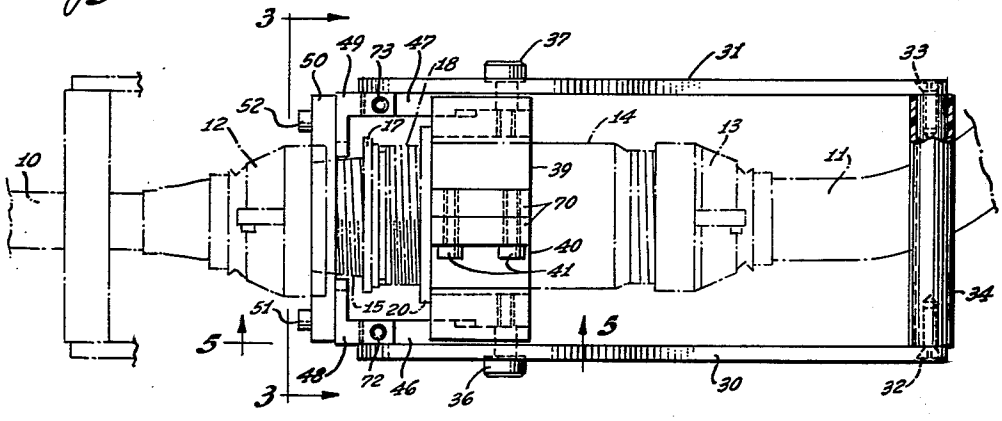


INVENTOR:
Harold E. Williams
By Smyth & Roston
Attorneys.

Oct. 16, 1962 H. E. WILLIAMS 3,059,206

CABLE CONNECTOR CLAMP

Filed July 24, 1959 3 Sheets-Sheet 2

Fig. 3

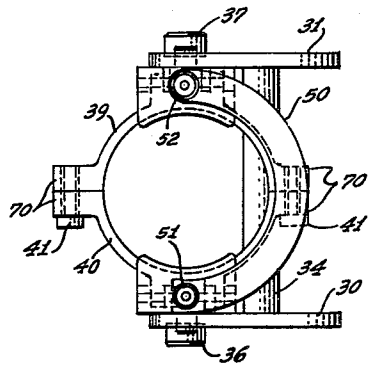


Fig. 4

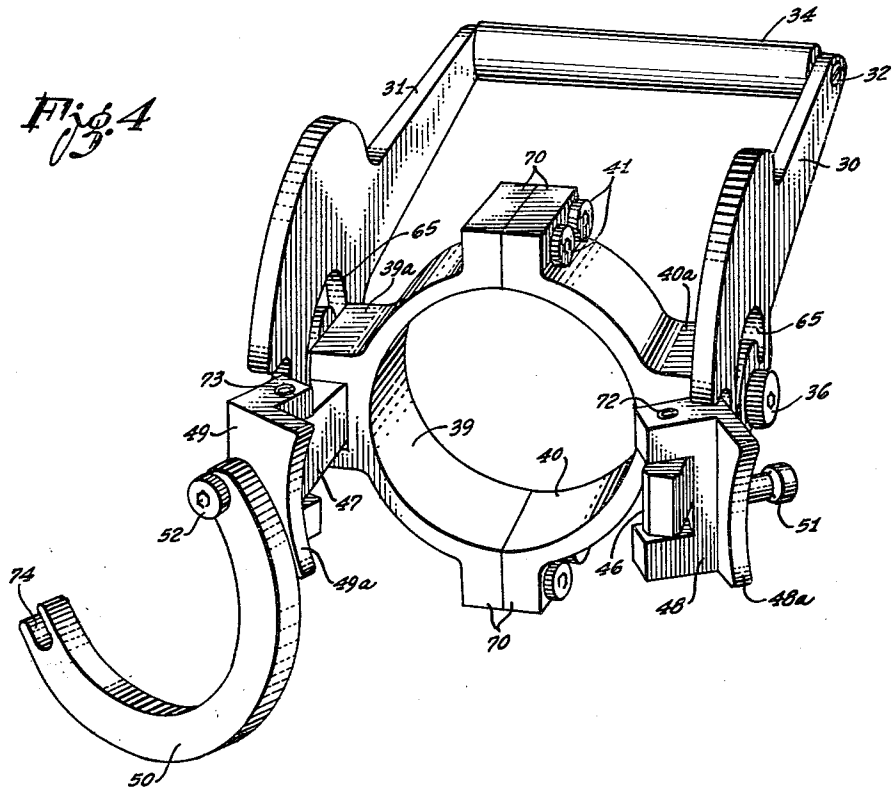


INVENTOR:
Harold E. Williams

By Smyth & Roston
Attorneys,

Oct. 16, 1962 H. E. WILLIAMS 3,059,206

CABLE CONNECTOR CLAMP

Filed July 24, 1959 3 Sheets-Sheet 3

Fig. 5

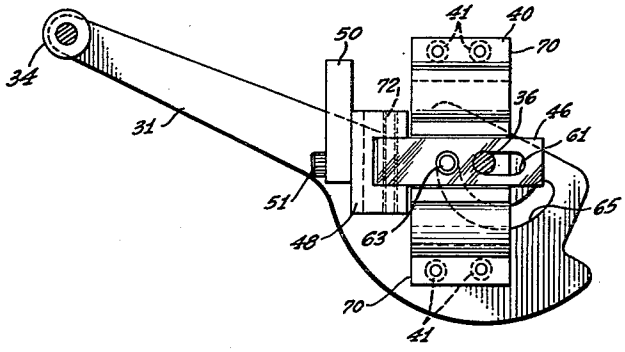


Fig. 6

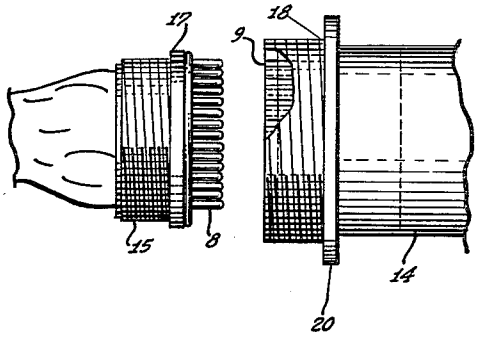


INVENTOR:
Harold E. Williams
By Smyth & Coaton
Attorneys

United States Patent Office 3,059,206 Patented Oct. 16, 1962



3,059,206

# CABLE CONNECTOR CLAMP

Harold E. Williams, Woodland Hills, Calif., assignor to Packard-Bell Electronics Corporation, a corporation of California

Filed July 24, 1959, Ser. No. 829,366
10 Claims. (Cl. 339—45)

This invention relates to coupling apparatus for electrical cables and, more particularly, to such apparatus which provides for substantial connect and disconnect forces.

In many communication facilities and computers, it is often necessary to connect or disconnect two cables having a relatively large number of conductors. In many applications cables, for example, having 100 conductors are not unusual. The two cables which are to be interconnected, terminate respectively in plug and receptacle connectors. The plug connector has one pin or jack for each of the conductors in the cable, and the receptacle connector has one opening mating with each pin of the plug connector. The forces required to fully insert a pin into its mating opening in the receptacle connector vary and may be relatively high. Illustratively, total forces of 200 pounds may be required to force multiple pin plug connector fully into the receptacle connector, and to separate the two connectors.

In order to couple the two connectors, a two-piece sleeve has heretofore been utilized. One of the two pieces of the sleeve is threaded on the plug connector and the other piece is threaded on the receptacle connector. The two-piece sleeve holds the two connectors together but, because of the large forces required for connection, the sleeve cannot be utilized to force the two connectors together or to separate them. It is necessary to force the two connectors together and then, in their fully mated position, to rotate the sleeve to maintain them at their fully mated position. The sleeve is of little assistance in forcing the two connectors together. Moreover, after connection, the threads freeze so that very large forces are required to rotate the sleeve in order to disconnect the cables. Many sleeve couplings cannot actually be disconnected because of this problem. For small cables, for example, less than two inches in diameter, the disconnect problem is aggravated because the cable cannot readily be gripped for rotation of the sleeve.

In an illustrative embodiment of this invention, threaded sleeve members are not required to connect or disconnect the cable connectors. A split ring assembly is mounted against the collar on one of the two cable connectors and two pivoted engaging clamps, which are slidingly mounted on the split ring assembly, are positioned to engage a collar on the other connector. The engaging clamps are pivotally mounted on two sliding links which are movable axially with respect to the cables when two pivoted actuators are rotated. The actuators are pivoted on the split ring assembly and form arcuate slots that engage pins on the slidable links. As the actuators are rotated, the pins on the slidable links are forced by the camming action of the sides of the arcuate slots in an axial direction. The slidable links and the engaging clamps are moved to join or separate the two connectors depending upon the direction of rotation of the actuator. The engaging clamps either engage the shoulder of one of the connectors to force the two connectors together or they engage one of the cable clamps threaded on the connectors to force them apart. Forces in excess of 200 pounds for both connect and disconnect are readily achieved.

A feature of this invention relates to the utilization of a split ring assembly which can be readily separated



and removed from the cable without separating the two connectors. To remove the prior art two-piece sleeve from the cable, it is necessary to separate the connectors.

Further features of this invention pertain to the provision of the camming action by the actuators as the arcuate sides of the slots in the actuators engage the pins on the slidable links. The pins upon which the actuators are rotatably mounted provide both for the eccentric pivotal movement for the camming action and also function as guides for the longitudinal movement of the slidable links.

Further advantages and features of this invention will become apparent upon consideration of the following description when read in conjunction with the drawing wherein:

FIGURE 1 is a side view of the coupling apparatus of this invention illustrating the position of the actuators by the solid lines in the disconnect position and by the phantom lines in the connect position;

FIGURE 2 is a top view of the coupling apparatus of this invention supported on a cable which is shown in phantom;

FIGURE 3 is an end view taken along lines 3—3 in FIGURE 2 of the coupling apparatus of this invention;

FIGURE 4 is a pictorial view of the coupling apparatus of this invention with the engaging clamps released and the actuators in their disconnect position;

FIGURE 5 is a side view of the coupling apparatus of this invention with one of the actuators removed so that one of the slidable links can be readily viewed; and

FIGURE 6 is a side view of illustrative plug and receptacle connectors for cables coupled by the coupling apparatus of this invention.

The coupling apparatus of this invention, which is shown in FIGURES 1 through 5, is utilized to connect and disconnect two cables **10** and **11** shown in phantom in FIGURE 2. The cables **10** and **11** each have a large number of conductors, not shown, that terminate respectively in a plug connector **15** and in a receptacle connector **18**. The connectors **15** and **18** which are shown in phantom in FIGURE 2 are also depicted in FIGURE 6. As shown in FIGURE 6, the plug connector **15** has a relatively large number of pins **8** and the receptacle connector **18** has a similar number of mating openings **9**. The plug connector **15** may, illustratively, have 90 pins and the receptacle connector have 90 mating openings correspondingly positioned so as to engage the pins **8** when the two connectors **15** and **18** are oriented at a particular angle with respect to each other.

The force required to fully insert a pin **8** into its mating opening **9** varies inversely with the pin size and illustratively may be approximately two pounds. The total force for fully inserting the 90 pins **8** into the 90 mating openings **9** would then be approximately 180 pounds. The force required to join and separate various mating connectors varies considerably with the manufacturing tolerances of the pins and the mating openings. For 90 pin connectors, the total force may be in a range between 120 and 200 pounds.

As shown in phantom in FIGURE 2, a clamp **12** is threaded on the plug connector **15** and a clamp **13** is threaded on a ring **14** which is in turn threaded on the receptacle connector **18**. The configurations of the connectors **15** and **18** are conventional and the coupling apparatus of this invention may be utilized also for other connectors. The ring **14** is an adapting member which adapts the connectors **15** and **18** so that the coupling apparatus of this invention may be utilized to connect and disconnect the two cables **10** and **11**. Some connectors have a substantial cylindrical portion which is required for use in conjunction with the coupling apparatus of this

invention. For such connectors, a ring 14 is unnecessary.

The ring 14 supports a split ring assembly including the two semi-cylindrical members 39 and 40, depicted in each of the FIGURES 1 through 5 but particularly in the pictorial representation of the coupling apparatus shown in FIGURE 4. The ring 14 is threaded over a portion of the receptacle connector 18 against a shoulder 20 of the connector 18. Though the ring 14 is mounted on the receptacle connector 18, it may also be mounted on the plug connector 15. If the ring 14 is mounted on the connector 15, the split ring assembly is then supported by the plug connector 15 instead of by the receptacle connector 18. The operation of the coupling apparatus for joining and separating the two connectors 15 and 18 is the same for either arrangement.

The two semi-cylindrical members 39 and 40 of the split ring assembly engage the ring 14 and fit up against the shoulder or collar 20 of the connector 18. The two members 39 and 40 are coupled by four screws 41, two at each end. The screws 41 engage shoulders 70 of the members 39 and 40 so that the members 39 and 40 tightly grip the ring 14.

The split ring assembly functions as a supporting structure for the rest of the coupling apparatus. The rings or members 39 and 40 form respectively two yokes 39*a* and 40*a* which slidingly support two links 47 and 46. The links 47 and 46 are substantially rectangularly shaped members each defining a longitudinal slot 61 shown particularly in FIGURE 5. The slot 61 of the link 46 engages the shoulder of a shoulder screw 36 which is also supported by the yoke 40*a* of the member 40. The shoulder screw 36 and a similar shoulder screw 37, which is mounted on the member 39, function both as pivots for two actuators 30 and 31 and also as guides for the slidable links 46 and 47.

The two actuators 30 and 31 are rotatably pivoted on the shoulder screws 36 and 37 and are joined at their distal ends by a sleeve 34. The actuators 30 and 31 are coupled respectively to the sleeve 34 by two screws 32 and 33. The sleeve 34 functions as a handle for rotating the actuators 30 and 31 respectively about the shoulder screws 36 and 37. The actuators 30 and 31 each define an arcuate slot 65 having two concentric arcuate surfaces which are not centered at the axis of the shoulder screws 36 and 37. In other words, the distance from each of the arcuate surfaces of the slots 65 varies with respect to the axis of the shoulder screws 36 and 37 when the actuators 30 and 31 are rotated. The arcuate surfaces of the slots 65 function as camming surfaces for two pins 63 respectively supported by the slidable links 46 and 47. As the actuators 30 and 31 are rotated about the shoulder screws 36 and 37 respectively, the pins 63 are forced in an axial direction with respect to the cables 10 and 11. The slidable links 46 and 47 can only move axially or longitudinally with respect to the cables 10 and 11 because they are restrained by the shoulder screws 36 and 37 and the yokes 40*a* and 39*a* of the split rings 40 and 39.

In the position of the actuators 30 and 31, as shown in FIGURE 1 by the solid lines, the slidable links 46 and 37 are at a position toward the left which is their disconnect position. When the actuators 30 and 31 are rotated in a counter-clockwise direction to their position shown in phantom in FIGURE 1 or as shown in FIGURE 5, the slidable links 46 and 47 are at their connect position toward the right. The pins 63 of the slidable links 46 and 47 are forced by the arcuate surfaces of the slots 65 of the actuators 30 and 31 to increase or decrease the distance between the pins 63 and the shoulder screws 36 and 37. The shoulder screws 36 and 37 are stationary with respect to the split ring assembly so that they function to provide an eccentric pivot for the camming action of the arcuate surfaces of the slots 65 with respect to the pins 63.



When the actuators 30 and 31 are rotated in a counter-clockwise direction, to their connect position, the larger diametric arcuate surfaces of the two slots 65 force the two pins 63 toward the shoulder screws 36 and 37. As described above, the pins 63 are mounted on the slidable links 46 and 47 so that they are moved therewith toward the right as shown in FIGURES 1 and 5. When the actuators 30 and 31 are rotated in a clockwise direction back to the disconnect position, the smaller diametric surfaces of the slots 65 force the pins 63 away from the shoulder screws 36 and 37. In this manner, depending upon the direction of rotation of the actuators 30 and 31, one or the other of the two arcuate surfaces of each of the slots 65 of the actuators 30 and 31 force the pins 63 and the links 46 and 47 therewith toward the right or the left.

The slidable links 46 and 47 rotatably support engaging clamps 48 and 49. The clamps 48 and 49 rotate respectively about pins 72 and 73 which pass through a yoke portion of the clamps 48 and 49 and the slidable links 46 and 47. The ends of the slidable links 46 and 47 are rounded to facilitate the rotation of the engaging clamps 48 and 49. In FIGURES 1, 2, 3 and 5, the engaging clamps 48 and 49 are shown engaging the plug connector 15 which is mounted, as described above, on the cable 10. In the pictorial representation of the coupling apparatus shown in FIGURE 4, the engaging clamps 48 and 49 are shown in a released position.

When the coupling apparatus is mounted on the two connectors 18 and 15, the split ring assembly is first mounted on the connector 18 and then, with the connector 15 engaging the connector 18, the clamps 48 and 49 are moved to their engaging position. With the clamps 48 and 49 in their engaging position, an arcuate yoke 50 which is pivoted by a screw 52 on the engaging clamp 49 is rotated in a clockwise direction, when viewed in FIGURE 4, to engage a shoulder screw 51 supported on the engaging clamp 48. The arcuate yoke 50 has a bifurcated end 74 which engages the shoulder screw 51 so as to latch the engaging clamps 48 and 49 against the plug connector 15. The engaging clamps 48 and 49 have arcuate surfaces 48*a* and 49*a* which are positioned adjacent the threads of the plug connector 14 when the clamps 48 and 49 are latched by the yoke 50. The arcuate surfaces 48*a* and 49*a* do not actually engage the threads of the connector 15 but are movable with respect thereto when the coupling apparatus is operated.

As described above, when the actuators 30 and 31 are rotated in a counter-clockwise direction toward their connect position, the slidable links are moved to the right as shown in FIGURES 1, 2 and 5. As shown particularly in FIGURE 2, when the slidable links 46 and 47 are moved to the right, the engaging clamps 48 and 49 are moved against the shoulder or collar 17 which is an integral part of the plug connector 15. The split ring assembly is rigidly mounted on the ring 14 against the shoulder 20 of the connector 18. The screws 41 cause the members 39 and 40 of the split ring assembly to securely engage the ring 14 so as not to be movable in either direction with respect thereto when the actuators 30 and 31 are rotated. As the actuators 30 and 31 are rotated in a counter-clockwise direction, the split ring assembly, therefore, remains stationary with respect to the connector 18 but the engaging clamps 48 and 49 are moved to first engage the collar 17 of the clamp 15 and then as the rotation of the actuators 30 and 31 continues, to force the pins 8 of the connector 15 into the openings 9 of the connector 18. The movement of the slidable links 46 and 47 and the engaging clamps 38 and 39 due to the rotation of the actuators 30 and 31 is sufficient to fully insert the pins 8 into the openings 9. The arrow 60 in FIGURE 1 illustrates the distance moved by the clamps 48 and 49 and the yoke 50.

Due to the configurations of the various components,

including the length of the actuators **30** and **31** which function as levers, the thrust capability of the engaging clamps **48** and **49** against the shoulder **17** is approximately 20 times greater than the force applied to the sleeve **34** by an operator. With 180 pounds required to fully join the connectors **15** and **18**, only 9 pounds are required at the sleeve or handle **34**.

When the two connectors **15** and **18** are to be separated, the handle **34** and the actuators **30** and **31** are rotated in a clock-wise direction to the disconnect position illustrated in FIGURES 1 through 3. As the actuators **30** and **31** are rotated, the camming action of the smaller arcuate surfaces of the slots **65** force the pins **63** to the left and the slidable links **46** and **47** therewith. During the first part of the disconnect operation, the engaging clamps **48** and **49** merely move away from the shoulder **17** but the connectors **15** and **18** remain fully engaged. Merely releasing the connecting pressure does not disconnect the two connectors **15** and **18**. In fact, a force similar in magnitude to the joining force is required for disconnection to remove the **90** pins **8** of the plug connector **15** from their mating openings **9** in the receptacle connector **18**.

The connector **15** and the sleeve **14** are engaged respectively by two cable clamps **12** and **13** briefly described above. The cable clamps **12** and **13**, which are conventional, are rotated respectively on the external threads of the connector **15** and the ring **14** and clamp respectively the cables **10** and **11**. The clamps **12** form a shoulder against which the engaging clamps **48** and **49** are forced during the disconnect operation. About half way through the counter-clock-wise rotation of the actuators **30** and **31**, the engaging clamps **48** and **49** are forced against the clamp **12** which is threaded on the connector **15**. As the rotation of the actuators **30** and **31** is continued, the clamp **21** and the connector **15** therewith are separated from the receptacle connector **18**. The thrust developed by the engaging clamps **48** and **49** against the clamp **12** is similar in magnitude to the thrust developed by the clamps **48** and **49** during the connection operation against the shoulder **17** of the connector **15**. In this manner, thrusts of 180 pounds or more are developed to positively join the two connectors **15** and **18** during the connect operation and to positively separate them during the disconnect operation.

Although this application has been disclosed and illustrated with reference to particular applications, the principles involved are susceptible of numerous other applications which will be apparent to persons skilled in the art. For example, the ring **14** as described above may be mounted on the connector **18**. The split ring assembly would then be supported by the connector **15** but the operation for connect and disconnect would be the same. As also indicated above, the coupling apparatus of this invention may be utilized with various kinds of connectors, some of which may have sufficient cylindrical surfaces for supporting a split ring assembly without an adapter ring **14**. The invention is, therefore, to be limited only as indicated by the scope of the appended claims.

I claim:

1. A cable coupling for connecting and disconnecting two multiconductor cables terminating in mating connectors, including, a ring assembly mounted on one of the mating connectors to hold that connector, slidable means mounted on said assembly and defining a guide slot, a guide pin mounted on said assembly and passing through said guide slot of said slidable means, a rotatable actuating member pivoted on said guide pin and having arcuate camming surfaces bearing against a portion of said slidable means for moving said slidable means in either of two directions along said ring assembly, and a clamping member mounted on said slidable means for engaging the other of the mating connectors so that it is moved toward or away from the one connector depending upon the direction of movement of said slidable means by said actuating member.

2. Coupling apparatus for joining and separating two multiconductor cables terminating in plug and receptacle connectors, including, a pair of pivot pins fixedly mounted on opposite sides of one of the connectors, an actuator member pivotally mounted on each of said pivot pins and having a pair of camming surfaces, a link slidably mounted on said one connector for each of said actuator members, each of said slidable links defining a guide slot engaging said pivot pin supporting the associated one of said actuator members and having a surface engaged by one or the other of said pair of camming surfaces of said associated actuating member depending upon the direction of rotation of said associated actuating member, and means including a clamping member supported on each of said slidable links for forcing the other one of the connectors in the direction of movement of said slidable links.

3. A cable coupling for connecting and disconnecting two multiconductor cables terminating in mating connectors, means slidably mounted on each side of one of the mating connectors and defining a guide slot, a pair of guide pins mounted respectively on the opposite sides of said one connector, each of said guide pins extending through said guide slot of the corresponding slidable means, a rotatable actuator member pivoted on each of said guide pins and having arcuate camming surfaces bearing against portions of the slidable means for moving said slidable means in either of two directions along said one connector, a rotatable clamping member pivoted on each of said slidable means for engaging and moving the other of the mating connectors relative to said one mating connector, and a latch on at least one of said clamping members for releasably maintaining said clamping members in engagement with said other mating connector.

4. A cable coupling for connecting and disconnecting two multiconductor cables terminating in mating connectors each of which has at least one shoulder, including, a split ring assembly mounted on one of the mating connectors against its shoulder, said split ring assembly including two yokes and a guide pin positioned in each of said yokes, a link slidably positioned in each of said yokes of said split ring assembly, each of said links defining a guide slot engaging said pin in said associated yoke, means including a rotatable actuating member pivoted on each of said guide pins for moving the associated link engaging said guide pin in said associated yoke, and means including a clamping member mounted on each of said slidable links for engaging the shoulder of the other of the mating connectors to move the other mating connector toward the one connector when said slidable links are moved by said actuating members.

5. A cable coupling for connecting and disconnecting two multiconductor cables terminating in mating connector assemblies, one of which has two oppositely facing shoulders, including, two guide pins fixedly mounted on opposite sides of the other of the mating connector assemblies, two links slidably mounted on said other connector assembly and defining guide slots engaging said two guide pins, two rotatable actuating members pivoted on said guide pins for moving said links in either of two directions in accordance with the direction of rotation of said actuating members, and means including a clamping member mounted on each of said slidable links for engaging one or the other of the two shoulders of said one mating connector when said links are moved by said actuating members whereby the two mating connector assemblies are joined or separated.

6. A cable coupling for connecting and disconnecting two multiconductor cables terminating in mating connectors, including a split ring assembly having at least two separable parts mounted on one of the mating connec-

tors, a pair of pivot pins mounted on said split ring assembly, an actuator member rotatably supported by each of said pivot pins and having a pair of arcuate camming surfaces having centers of curvature which do not coincide with the axis of said pivot pins, a slidable link mounted on said split ring assembly for each of said actuator members, each of said slidable links defining a guide slot engaging said pivot pin rotatably supporting the associated one of said actuator members, a pin mounted on each of said slidable links which is engaged by said pair of camming surfaces of said associated actuating member when said associated actuating member is rotated, and means including a clamping member supported on each of said slidable links for initiating the movement of the other one of said connectors toward said one connector after a predetermined angular rotation of said actuator members.

7. A coupling unit for two electrical cables, one terminating in a plug connector and the other in a receptacle connector, including, a split ring assembly mounted on the receptacle connector to engage the receptacle connector, two links slidably mounted on opposite sides of said split ring assembly and movable in an axial direction along the cables, a clamp pivoted on each of said two links and slidable with said links for releasably engaging the plug connector in one slidable position of the clamp, latching means mounted on at least one of said clamps for maintaining said clamps in engagement with the plug connector, and a camming actuator member rotatably mounted on said split ring assembly and operatively coupled to said links for progressively sliding said two links on said split ring assembly upon a rotation of said camming actuator member.

8. The coupling unit set forth in claim 7 in which the camming actuator member is provided with an eccentric relationship with respect to the split ring assembly to progressively slide said links on said split ring assembly upon a rotation of said camming actuator member.

9. A cable coupling for connecting and disconnecting



two cables terminating in mating connectors, including, a ring assembly detachably mounted on one of the connectors, means mounted on said ring assembly and including a pair of clamps slidable in an axial direction along the cables and pivotable in a direction toward and away from the mating connectors to obtain an engagement with one of the mating connectors in one slidable position of the clamp means, latching means mounted on at least one of said clamps for latching said clamps in engagement with the other one of the connectors in the disposition of the clamps toward the mating connectors and pivotably disposed relative to the clamps, and camming means rotatably mounted on said ring assembly and operatively coupled to said ring assembly for moving said first ring assembly, pair of clamps and latching means axially along the cables into engaging or disengaging relationship with the mating connectors.

10. The cable coupling set forth in claim 9 in which the camming means are eccentrically mounted on the ring assembly and are provided with guiding portions to obtain an eccentric rotation of the camming means and an axial movement of the ring assembly, pair of clamps and latching means.

**References Cited** in the file of this patent

UNITED STATES PATENTS

| | | |
|---|---|---|
| 1,036,890 | Ogden | Aug. 27, 1912 |
| 1,047,063 | Irving et al. | Dec. 10, 1912 |
| 1,639,813 | Schawrow | Aug. 23, 1927 |
| 1,874,334 | Nero | Aug. 30, 1932 |
| 2,194,799 | Larson | Mar. 26, 1940 |
| 2,198,079 | Ferris et al. | Apr. 23, 1940 |
| 2,407,176 | Piatt et al. | Sept. 3, 1946 |
| 2,541,294 | Ronci | Feb. 13, 1951 |
| 2,594,748 | Earl | Apr. 29, 1952 |

FOREIGN PATENTS

| | | |
|---|---|---|
| 424,525 | Italy | Aug. 22, 1947 |