July 4, 1967 J. H. TANGES, JR 3,329,764

CONDUCTIVE PLASTIC CABLE SHIELD

Filed May 17, 1965 2 Sheets-Sheet 1

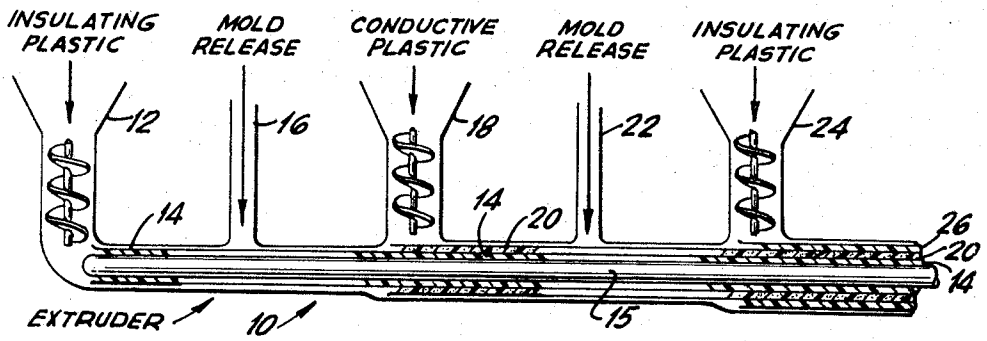

FIG. 1

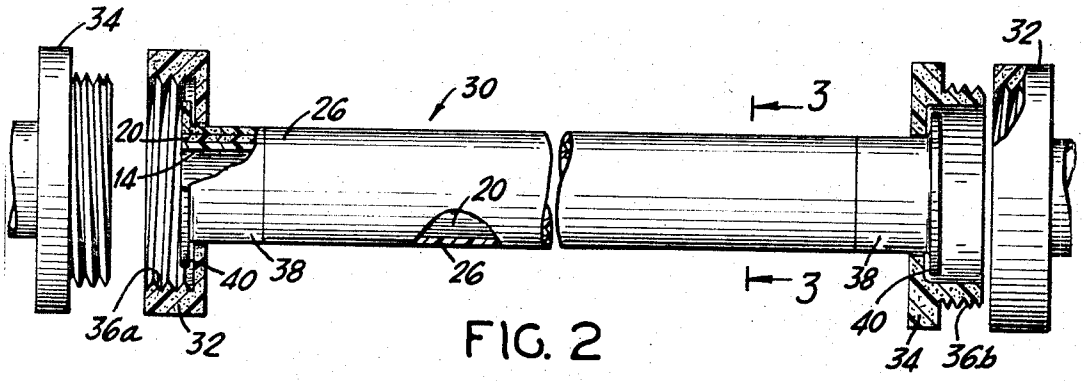

FIG. 2

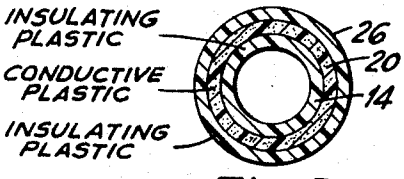

FIG. 3

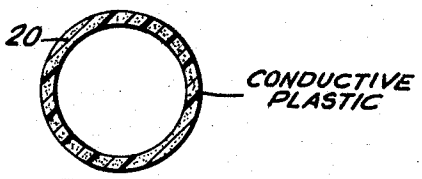

FIG. 4

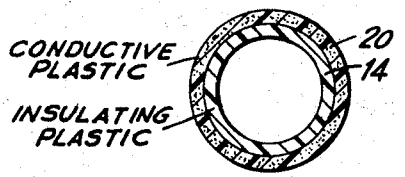

FIG. 5

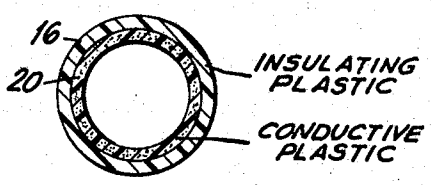

FIG. 6

INVENTOR.
JOHN H. TANGES, JR.

BY

Leonard H. King

ATTORNEY.

July 4, 1967 J. H. TANGES, JR 3,329,764

CONDUCTIVE PLASTIC CABLE SHIELD

Filed May 17, 1965 2 Sheets-Sheet 2

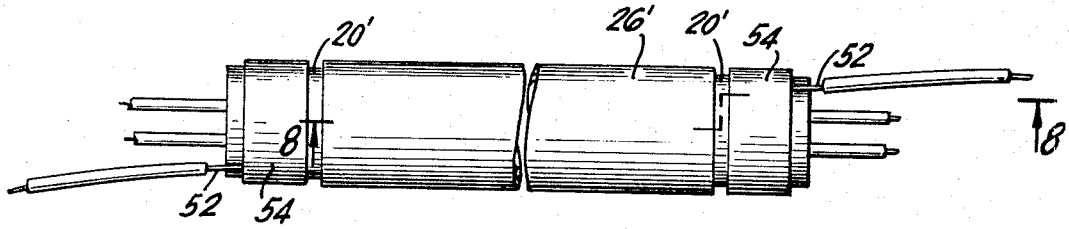

FIG. 7

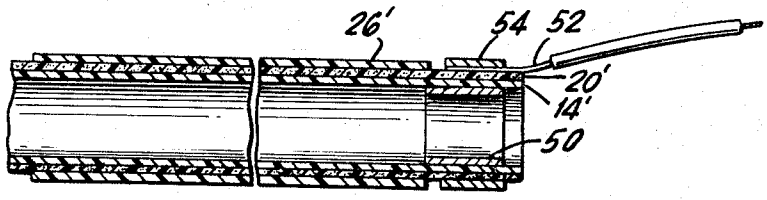

FIG. 8

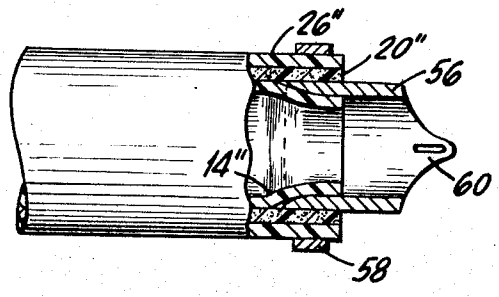

FIG. 9

INVENTOR.
JOHN H. TANGES, JR.

BY

Leonard H. King
ATTORNEY.

United States Patent Office

3,329,764

Patented July 4, 1967

3,329,764

CONDUCTIVE PLASTIC CABLE SHIELD

John H. Tanges, Jr., Baldwin, N.Y.
(41 Wisteria Drive, Ormond Beach, Fla. 32074)

Filed May 17, 1965, Ser. No. 456,150
23 Claims. (Cl. 174—74)

ABSTRACT OF THE DISCLOSURE

An electrically conductive plastic cable covered by a strippable insulator plastic covering is provided.

This invention relates generally to electrical cables and more particularly to a conductive plastic cable shield.

It is conventional to include with electrical cables an electrically conductive shield to provide electrostatic shielding. For example, the cable connecting a microphone and an amplifier, if not shielded, would pick up the various electromagnetic fields present causing unwanted noises to appear in the output.

Generally braided copper shields are employed. However, to a limited extent, conductive plastic shields have come into use. The conductive plastic offers many advantages, e.g. light weight, "watertight shielding," absence of strands which can break and puncture the conductors in the cable, improved flexing properties over copper braid and more pliability than copper braid shielded cable. A particularly important advantage is the low mechanical noise associated with this construction.

A major problem has been the lack of a suitable means of connection to a thin, relatively mechanically weak condutcive plastic. The present invention overcomes this problem.

In the prior art approach, an uncoated ground wire called a "drain wire" is laid in the shield together with the insulated conductors. There are many disadvantages to this configuration; for example, the drain wire tends to be unreliable, often cuts the shield and can be a source of mechanical noise.

The cable shield of the present invention, in its most complete form, is comprised of a tubular, inner insulating member, an intermediate conductive plastic member, and an outer insulating member. Alternative configurations or the present invention include a simple conductive plastic tube, a condutive plastic tube having an inner insulator only and a conductive plastic tube having an outer insulator only. In one embodiment, a conductive plastic ferrule is applied to the cable shield end by heating or chemical means so that electrical connection may be made to the shield. Optionally, a free floating conductive plastic fastener, such as a nut and/or a threaded plug, may be used in conjunction with a mating member. A feature of this invention is the mode of connecting to the conductor.

The conductive portion of the cable is a thermoplastic vinyl compound. It is easily formed into tubing by extrusion techniques. The controllability of resistivity values permits the conductivity to be varied to meet particular requirements. Conductivity may be accurately repeated over successive production runs. The insulation layers, like the conductive layer, are flexible. Polyvinylchloride has been found to be very satisfactory. Suitable resins are commercially available and may be chosen by the user to meet specific environmental conditions. The conductive and insulating layers are in the order of 0.020 inch thick. If desired, heat shrinkable resins may be employed.

In the cable shield configurations mentioned hereinabove, conventional extrusion processes are used to form the tubular member. Where the cable is compound, that is, comprised of one or more layers of conductive and insulating plastic, the extrusion steps are done successfully

and of course continuously. Preferably a mold release agent or lubricant is applied between the conductive and insulating plastics. This renders practical the stripping of the insulator at the ends of the cable where a ferrule is to be secured.

The need for the mold release agent is eliminated by substituting two plastics with low cobonding characteristics. For example, if the conductive plastic layer is a vinyl composition, rubber, polyethylene or polypropylene may be used to provide a readily strippable insulator layer.

While the range of resistivity may be varied by judicious selection of a suitable molding composition, to meet specific electrical requirements a resistivtiy of 8 ohm-cm.^{3} is suited for general shielding applications.

Accordingly, it is an object of the present invention to provide an improved electrical cable comprised of a conductive plastic having conductive plastic connective means at the end thereof.

Another object is to provide a cable of the aforementioned type having an inner insulating plastic layer.

A further object is to provide a cable of the aforementioned type having an outer insulating plastic layer.

An additional object is to provide a cable of the aforementioned type having both an inner and outer insulating plastic layer.

A particular object of the present invention is to provide improved means for securing conductive plastic connective means to the ends of the aforementioned types of cable having an insulating layer.

A feature of the present invention is the inclusion of free floating conductive plastic threaded fasteners in combination with the aforementioned shield.

Another object is to provide a multilayer cable having strippable insulator thicknesses.

A further object is to provide a shielded cable having a mold release agent between adjacent conductive and insulating plastic layers.

An alternative object is to provide strippability by means of the use of noncompatible plastics.

These and other features, objects and advantages of the invention will, in part, be pointed out with particularity and will, in part, become obvious from the following more detailed description of the invention taken in conjunction with the accompanying drawing which forms an integral part thereof.

In the various figures of the drawing, like reference characters designate like parts.

In the drawing:

FIG. 1 is a schematic side elevation view of typical extrusion apparatus and the method of forming the cable of the present invention;

FIG. 2 is an enlarged side elevation view, partly in section, illustrating one embodiment of the present invention together with end fittings comprising ferrules and threaded fasteners;

FIG. 3 is an enlarged transverse cross sectional view taken along line 3—3 of FIG. 2;

FIGS. 4, 5 and 6 are enlarged transverse cross sectional view similar to FIG. 3 but showing alternative embodiments of the present invention;

FIG. 7 is a side elevational view of an alternative construction of the present invention employing metallic ferrules or connector means;

FIG. 8 is an enlarged side view of the FIG. 7 embodiment; and

FIG. 9 is an enlarged fragmentary side elevation view, partly in section, illustrating an alternative construction of the FIG. 7 embodiment.

Referring now to the drawing, FIG. 1 shows schematically the basic steps used in forming the present invention. For ease of explanation, the embodiment of the

invention comprising conductive plastic tubing with inner and outer insulating layers will be described together with conductive end fitting such as ferrules, nuts and externally threaded plugs. It is to be understood, however, that any lesser combination of the aforementioned elements will still be within the scope of the present invention.

Conventional extruding apparatus **10** is schematically illustrated. First hopper **12** provides input means for the polyvinylchloride plastic that forms inner insulator **14**. After the material is extruded through a conventional die member **15** a lubricant or mold release agent such as silicone oil is applied, through first inlet port **16**, to the outside surface of inner insulator **14** for reasons to be described more fully hereinafter. Second hopper **18** provides input means for the conductive plastic **20** which is extruded around the inner insulating layer **14**. Once again, a lubricant or mold release agent is applied, this time through second inlet port **22**, to the outermost extruded surface. Then, through third hopper **24**, the polyvinylchloride outer insulating plastic layer **26** is fed. The actual extruding techniques are all well known and need not be described in great detail.

FIG. 2 illustrates a typical cable assembly **30** having an inner insulating plastic layer **14**, a central, conductive plastic layer **20**, and an outer insulating plastic layer **26**. Both of the ends, as particularly illustrated at the left-hand side of FIG. 2, are stripped of their outer insulating plastic layer **26** over a length approximately one-quarter inch. The use of a mold release agent, as described above, greatly facilitates this operation and is an important feature. A conductive plastic nut **32** and a conductive plastic hollow plug **34** having internal and external threads **36***a* and **36***b*, respectively, are slipped over the outside diameter of cable assembly **30**. Hollow, conductive plastic ferrules **38** having flange portions **40** are then secured to the stripped ends of cable assembly **30** by one of the many well known means such as heat or chemical fusion. Nut **32** and plug **34** are freely floating but cannot come loose because of the interference with flange portion **40** of ferrules **38**. The nut and plug are adapted to mate with their counterpart element in the next assembly, as shown fragmentarily in FIG. 2. It will be seen that electrical continuity is maintained through the extruded conductive plastic, the conductive plastic ferrule and either the conductive plastic nut or the conductive plastic plug.

FIGS. 4, 5 and 6 illustrate alternative embodiments of the aforementioned device. The extrusion process is substantially the same except for the elimination of the step or steps not required. It should be pointed out at this time that an inner conductor could be supplied with either of the embodiments (FIG. 3 and FIG. 5) having an inner insulator, or the customer may insert it himself. The inner insulator **14** is therefore covered with a mold release agent so that the conductive plastic layer, which would be the outer conductor or shield, may be stripped away. Inner conductors for the FIG. 4 and FIG. 6 embodiments would of course have to have their own outer insulating layer.

Referring now to FIGS. 7, 8 and 9 where there is shown a preferred form of electrical connection to the conductive plastic shield, to make the connection, the outer insulating layer **26'** is removed, as in FIGS. 7 and 8. A metal ferrule **50** is inserted and a pigtail lead **52** clamped to the conductive layer **20** by crimped-on ring **54**.

In FIG. 9, an alternative embodiment is shown wherein a metallic knife-edged ferrule **56** is driven in between layers **14''** and **20''**. The ferrule is clamped by ring **58** positioned over outer insulator **26''**. Ferrule **56** may include an integral terminal **60**. Obviously if the configuration of FIGS. 4, 5 or 6 are employed, the insulation layer need not be removed if the metal ring or ferrule contacts the conductive layer.

There has been disclosed heretofore the best embodiments of the invention presently contemplated and it is to be understood that various changes and modifications may be made by those skilled in the art without departing from the spirit of the invention.

What is claimed is:

1. An electrical cable comprising:
(a) a length of conductive plastic tubing;
(b) a layer of mold release agent disposed over the outside surface of said conductive tubing;
(c) a length of insulating plastic covering substantially the entire outside surface of said conductive tubing; and
(d) connection means rigidly secured to and in electrical contact with each end of said conductive plastic tubing.

2. The device of claim **1** wherein said connection means comprises conductive plastic ferrules.

3. The device of claim **2** wherein said ferrules each include a flange and wherein there is further included a pair of conductive sleeves loosely disposed on said length of insulating plastic intermediate said flanged portions of said ferrules.

4. The device of claim **3** wherein one of said sleeves is an internally threaded nut and the other of said sleeves is an externally threaded hollow plug.

5. The device of claim **3** wherein said sleeves are conductive plastic.

6. The device in accordance with claim **1** wherein said connection means comprises a first metallic tubular member secured to the inside of said conductive plastic tubing and a second metallic tubular member secured to the outside of said conductive plastic tubing, said first and second metallic tubular members being positioned at the ends of said cable.

7. The device in accordance with claim **6** wherein at least one of said metallic tubular members includes a tab portion defining an integral terminal.

8. An electrical cable comprising:
(a) a length of conductive plastic tubing;
(b) a length of insulating plastic covering the entire inside surface of said conductive tubing;
(c) a layer of mold release agent disposed between the confronting surfaces of said conductive tubing and said insulating plastic; and
(d) connection means rigidly secured to and in electrical contact with each end of said conductive plastic tubing.

9. The device of claim **8** wherein said connection means comprises conductive plastic ferrules.

10. The device of claim **9** wherein said ferrules each include a flange and wherein there is further included a pair of conductive sleeves loosely disposed on said conductive tubing intermediate said flanged portions of said ferrules.

11. The device of claim **10** wherein one of said sleeves is an internally threaded nut and the other of said sleeves is an externally threaded hollow plug.

12. The device of claim **10** wherein said sleeves are conductive plastic.

13. The device in accordance with claim **8** wherein said connection means comprises a first metallic tubular member secured to the inside of said conductive plastic tubing and a second metallic tubular member secured to the outside of said conductive plastic tubing, said first and second metallic tubular members being positioned at the ends of said cable.

14. The device in accordance with claim **13** wherein at least one of said metallic tubular members includes a tab portion defining an integral terminal.

15. An electrical cable comprising:
(a) a length of conductive plastic tubing;
(b) a first length of insulating plastic covering the entire inside surface of said conductive tubing;

(c) a first layer of mold release agent disposed between the confronting surfaces of said conductive tubing and said first insulating plastic;

(d) a second length of insulating plastic covering substantially the entire outside surface of said conductive tubing;

(e) a second layer of mold release agent disposed between the confronting surfaces of said conductive tubing and said second length of insulating plastic; and

(f) connection means secured to and in electrical contact with each end of said conductive tubing.

16. The device of claim **15** wherein said connection means comprises conductive plastic ferrules.

17. The device of claim **16** wherein said ferrules each include a flange and wherein there is further included a pair of conductive sleeves loosely disposed on said length of insulating plastic intermediate said flanged portions of said ferrules.

18. The device of claim **17** wherein one of said sleeves is an internally threaded nut and the other of said connectors in an externally threaded hollow plug.

19. The device of claim **17** wherein said sleeves are conductive plastic.

20. The device in accordance with claim **15** wherein said connection means comprises a first metallic tubular member secured to the inside of said conductive plastic tubing and a second metallic tubular member secured to the outside of said conductive plastic tubing, said first and second metallic tubular members being positioned at the ends of said cable.

21. The device as in claim **20** wherein one end of said first metallic tubular member has a knife edge periphery, said knife edged end being disposed in between said length of conductive plastic tubing and said first length of insulating plastic.

22. The device in accordance with claim **20** wherein at least one of said metallic tubular members includes a tab portion defining an integral terminal.

23. An electrically conductive cable assembly comprising:

(a) a length of electrically conductive plastic tubing;

(b) a length of insulating plastic covering substantially the entire outside surface of said conductive tubing and strippable therefrom; and

(c) circuit connection means secured to and in electrical contact with said conductive tubing.

References Cited

UNITED STATES PATENTS

2,536,003	12/1950	Dupre	174—75 X
2,930,836	3/1960	Floyd	174—84

FOREIGN PATENTS

247,389	10/1963	Australia.
680,249	2/1964	Canada.

LEWIS H. MYERS, *Primary Examiner.*

H. HUBERFELD, *Assistant Examiner.*