Feb. 11, 1941. G. KRANTZ 2,231,128

GARMENT HANGER

Filed Jan. 30, 1940

Fig. 1.

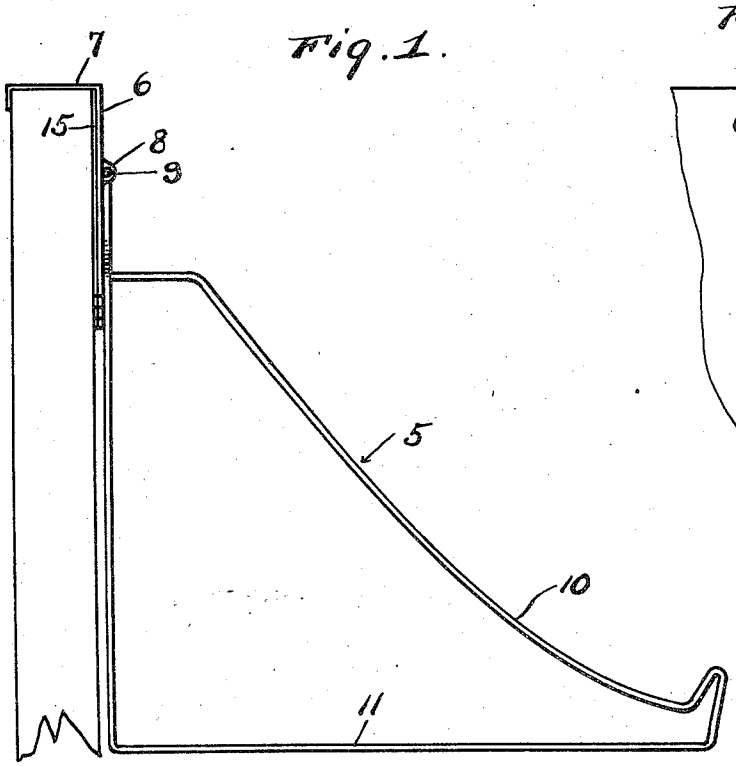

Fig. 2.

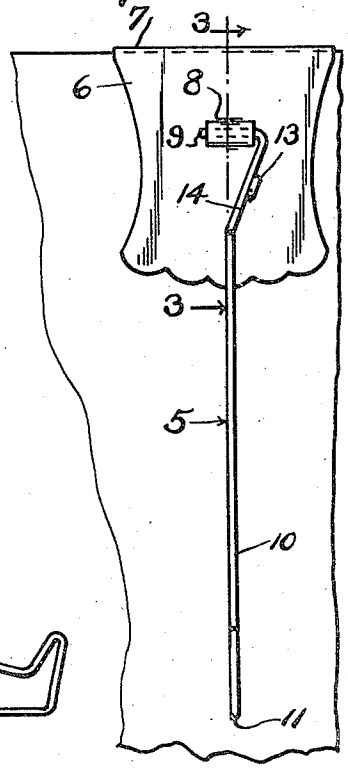

Fig. 4.

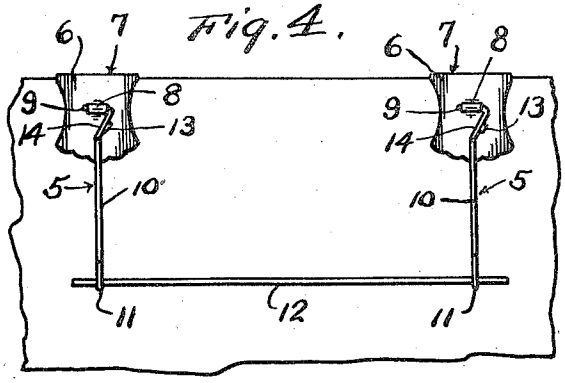

Fig. 3.

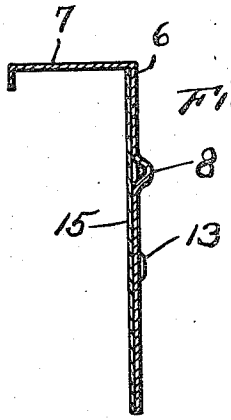

Fig. 5.

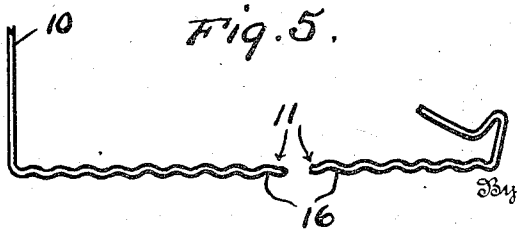

Inventor

Gustave Krantz

By L. B. James

Attorney

Patented Feb. 11, 1941 2,231,128

UNITED STATES PATENT OFFICE

2,231,128

GARMENT HANGER

Gustave Krantz, Milwaukee, Wis.

Application January 30, 1940, Serial No. 316,451

1 Claim. (Cl. 211—106)

This invention relates to brackets and supports and more particularly to a combined garment hanger and shelf support.

One of the objects of this invention resides in the provision of a hanger adapted to be removably disposed on a door, window or the like without the use of fastening elements or tools.

Another object of this invention resides in the particular manner in which the rod is supported on the bracket.

A further object of this invention resides in the particular manner of securing the rod to the bracket so as to prevent dislodgement thereof from its bearing.

A still further object of this invention resides in the provision of hanger adapted to be used in multiple to form a shelf support.

With these and other objects in view this invention resides in the certain novel features of construction and arrangement of elements to be hereinafter more particularly set forth in the specification, illustrated in the accompanying drawing and pointed out in the appended claim and, while this disclosure depicts my present conception of the invention, the right is reserved to resort to such changes in construction and arrangement of elements as come within the scope of the claim.

In the accompanying drawing forming a part of this application:

Figure 1 is an edge view of a door or the like showing the hanger supported thereon.

Figure 2 is a front view thereof.

Figure 3 is a vertical sectional view of the bracket per se taken approximately on line 3—3 of Figure 2.

Figure 4 is a front view showing two hangers used to support a shelf.

Figure 5 is a side view of a portion of the rod showing its lowermost portion corrugated.

In the present embodiment of this invention the numeral 5 designates, in general, a hanger which consists of a bracket 6 formed from sheet metal or other suitable material bent to form a bill 7 adapted to engage the upper edge of a door, window or other similar ledge to removably support the same.

The aforesaid bracket is provided with a horizontally disposed bearing 8 formed thereon by stamping the material outwardly, said bearing being provided to receive a horizontally disposed lug 9 formed on the upper end of a substantially L-shaped rod 10 the lowermost member 11 of which preferably extends outwardly on a horizontal plane to accommodate a plurality of garment hangers (not shown) and, where a shelf indicated at 12 in Figure 4 is to be supported from a window, door or the like, two or more of the hangers are arranged in alignment on the support therefor.

In order to prevent accidental dislodgement of the lug 9 from the bearing 8 and maintain the rod in rigid suspended relation on the bracket a boss 13 is stamped outwardly on the bracket so as to engage an offset portion 14 formed on the rod beyond the lug 9 thereof.

The bracket 6 has its inner surface preferably covered with a felt or other similar pad 15 to prevent scratching or marring the support for the same.

In Figure 5 is shown a portion of the rod 5 having its lowermost portion 10 corrugated as indicated at 16.

With this invention fully set forth it is manifest that a hanger is provided which can be readily adapted for use as a garment hanger or shelf support and through the simplicity of construction thereof it can be manufactured cheaply and readily disposed in operative position without the use of tools or fastening elements.

What I claim and desire to protect by Letters Patent is:

A hanger consisting of a hook-shaped bracket, a horizontal bearing formed on the outer surface of the bracket, a substantially L-shaped rod having its upper end offset, a horizontally disposed lug formed on the offset end of the rod seated in the bearing, an outwardly extending boss formed on the bracket and engaging the offset portion of the rod and a pad on the inner surface of the bracket.

GUSTAVE KRANTZ.