(12) INTERNATIONAL APPLICATION PUBLISHED UNDER THE PATENT COOPERATION TREATY (PCT)

(19) World Intellectual Property Organization
International Bureau

(43) International Publication Date
19 July 2018 (19.07.2018)

W!P O | PCT

(10) International Publication Number
WO 2018/132081 Al

(51) International Patent Classification:
A61B 17/04 (2006.01) *A61B 17/06* (2006.01)

(21) International Application Number:
PCT/TR20 17/050430

(22) International Filing Date:
14 September 2017 (14.09.2017)

(25) Filing Language: Turkish

(26) Publication Language: English

(30) Priority Data:
2017/00324 10 January 2017 (10.01.2017) TR

(72) Inventor; and
(71) Applicant: CELIK, Alper [TR/TR]; Kocatepe Mh. Yorum Sk. Yorum Istanbul Evleri E Blok No: 16, Bayrampasa/Istanbul (TR).

(74) Agent: DESTEK PATENT A. S.; Lefkose Caddesi, NM Ofis Park B Blok No:36/5, Besevler, 161 10 Nilufer/Bursa (TR).

(81) Designated States *(unless otherwise indicated, for every kind of national protection available):* AE, AG, AL, AM, AO, AT, AU, AZ, BA, BB, BG, BH, BN, BR, BW, BY, BZ, CA, CH, CL, CN, CO, CR, CU, CZ, DE, DJ, DK, DM, DO, DZ, EC, EE, EG, ES, FI, GB, GD, GE, GH, GM, GT, HN, HR, HU, ID, IL, IN, IR, IS, JO, JP, KE, KG, KH, KN, KP, KR, KW, KZ, LA, LC, LK, LR, LS, LU, LY, MA, MD, ME, MG, MK, MN, MW, MX, MY, MZ, NA, NG, NI, NO, NZ, OM, PA, PE, PG, PH, PL, PT, QA, RO, RS, RU, RW, SA, SC, SD, SE, SG, SK, SL, SM, ST, SV, SY, TH, TJ, TM, TN, TR, TT, TZ, UA, UG, US, UZ, VC, VN, ZA, ZM, ZW.

(84) Designated States *(unless otherwise indicated, for every kind of regional protection available):* ARIPO (BW, GH, GM, KE, LR, LS, MW, MZ, NA, RW, SD, SL, ST, SZ, TZ, UG, ZM, ZW), Eurasian (AM, AZ, BY, KG, KZ, RU, TJ, TM), European (AL, AT, BE, BG, CH, CY, CZ, DE, DK, EE, ES, FI, FR, GB, GR, HR, HU, IE, IS, IT, LT, LU, LV, MC, MK, MT, NL, NO, PL, PT, RO, RS, SE, SI, SK, SM, TR), OAPI (BF, BJ, CF, CG, CI, CM, GA, GN, GQ, GW, KM, ML, MR, NE, SN, TD, TG).

Published:
— *with international search report (Art. 21(3))*
— *before the expiration of the time limit for amending the claims and to be republished in the event of receipt of amendments (Rule 48.2(h))*

(54) Title: ENDOSCOPIC SUTURE DEVICE WITH CIRCULAR NEEDLE

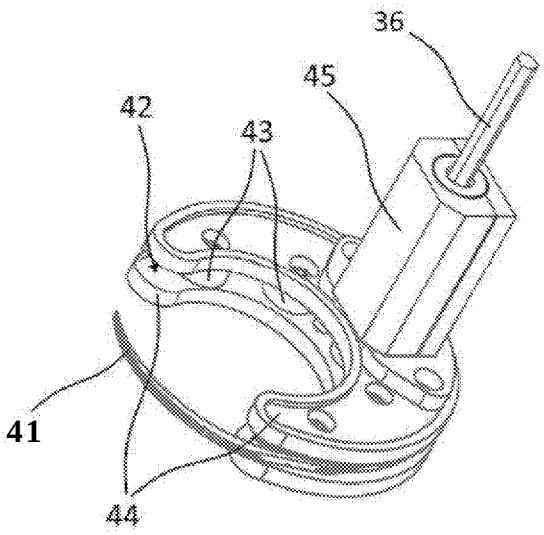

Figure - 7

(57) Abstract: A suture device (10) is disclosed that performs bonding of tissues from one point with minimum damage by using thread (50) in all-closed operations including laparoscopic and thoracoscopic operations, the device being moved by an actuator (35) connected to a body (20), performing a one-move suturing by enabling circular movement of the needle (41) which is connected to the thread (50), formed in a manner to form a semi-circle and including at least one pointed end (41 a).

WO 2018/132081 A1

ENDOSCOPIC SUTURE DEVICE WITH CIRCULAR NEEDLE

Technical Field

The invention relates to suture devices that are used for bonding the tissues with one another in endoscopic operations.

The invention more specifically relates to a suture device that provides the bonding of the tissues from one point with minimum damage by enabling circular movement of its needle, which has a special semi-circular form and is attached to the thread, by the virtue of cylinder system in all closed operations including laparoscopic and thoracoscopic operations.

Prior Art

Suturing the tissue in endoscopic operations that are performed in a closed manner such as ventral cavity and thoracic cavity is an application that is widely used in prior art. In these kind of operations, which are also called laparoscopic and thoracoscopic operations, there is a need for methods and devices that are invasive in minimum and that do not damage the tissues. Various tools and devices are used for this purpose in prior art.

An example of suture device is presented in the utility model document titled "Magnet needle holder" which is registered as TR2006/06331 in TPI. The device is used by inserting into ventral cavity through a pipe of 5 mm diameter, needle is captured by jaws via a magnet that is placed on the top of the needle of surgical thread that is inserted into ventral cavity via another pipe and the needle is used in the suturing by compressing the needle inside the mechanism. In this application, the suturing process is done by another device after inserting the body. Therefore, it is needed to perform two openings into the body and to use different equipment.

Another device that is used and designed for the purpose of endoscopic operations is described in the patent document titled "A surgical tool" with number TR201 3/01 275. The said invention is a surgical tool that includes handles enabling the handling of the tool by hand and fingers of the user and fixing the tool into the hand in endoscopic method, a needle handler enabling the ease of movement and stabilization of the needle when carrying, a indented surface enabling locking in order to limit the undesired movement of the drive part. With this design it is aimed that the undesired movements are the detachment of the needle from the needle handler during the

endoscopic intervention. Nevertheless, the movement of the needle still largely depends on the hand the machinery accuracy cannot be benefited from.

Device that is described in the USA patent document titled 'Ventral hernia defect closure' with number US201 63541 92 has a similar structure that resembles to the two jawed tools being used traditionally in the technique. In this structure, the needle wherein a thread is inserted between two ends parallel to each other, performs serial transition procedure and it has to perform insertion to the opposite side for each tissue transition step by staying connected to one of the ends each time. Therefore, suturing can be performed with two process instead of one and the tissue is damaged more than desired. Consequently, recovery time of the patient is getting longer.

In the structures titled 'Endoscopic sewing device and associated method" with number US7842046; 'Placing sutures' with number US9504465, 'Suturing instrument with deflectable head' with number US2007088372; 'Endoscopic suturing device with suture management' with number US201 2022560; 'Endoscopic Needle Assembly' with number US201 2 150200; 'Endoscopic suturing device' with number US201 2029536 in USA patents; needle moves along one route, an insertion on the opposite side is required for each tissue transference and abovementioned problems occur.

As a result, a need for a suture device that provides the bonding of the tissues from one point with minimum damage by enabling a circular movement of its needle, which has a special semi-circular form and is attached to the thread, by the virtue of cylinder system in all closed operations including laparoscopic and thoracoscopic operations and the inadequacy of the existing solutions entails an improvement in the technical field.

Purpose of the Invention

The present invention relates to a suture device that fulfills the abovementioned needs, eliminates the abovementioned disadvantages and provides some additional advantages.

The main purpose of the suture device according to the invention is to provide suturing the respective tissues with one move with circular movements by enabling the circular movement of the needle, which has special semi-circular form that is connected to the thread, by the cylinder system. Therefore, additional devices are not needed to be used and the operation can be performed with one entry point that is opened into body. Consequently, it is possible for the operation to affect the patient in minimum level by enabling the insertion from one cut point.

Thread, needle and the mechanism that performs the suturing are integrated in one device and it does not have risks as other applications do, such as needles not contacting with the magnets, jaw locking mechanism having a loss of function when inside the body and being opened and losing its function of handling the needle. The possibility of damaging the organs by losing the needle inside the body is decreased to the minimum level.

Another aim of the invention is to prevent the detachment of the special designed needle from the device by protecting the needle in a fixed position in the movement channel, which is located in the device in an integrated manner. Due to the shape of the needle and its obligatory route that the needle follows during the suturing and it is fixed to the control area of the device; even in case of an undesired movement, it is not possible that the needle is detached from the device.

Another aim of the present invention is to perform the desired suturing process with one movement of the needle due to the needle movement occurring along a circular route. Therefore, it is enabled that the needle harms the tissue to be sutured in minimum level during the suturing and the healing of the patient after the operation improves at the same rate.

Another aim of the present invention is that the needle has the ability of moving bidirectionally within the movement channel and provide ease in the operation with this movement freeness.

Another aim of the present invention is that the needle can be located in an angular manner with respect to the body and provides movement freeness due to the juncture structure of the suturing module in which the needle bearing is located.

Another aim of the present invention is that the thread is connected to the needle in a fixed manner by compressing during the production and therefore a need of needles being connected to threads before the operation is eliminated. Thus, time is saved during the operations.

In order to achieve the abovementioned goals in general terms, a suture device is developed that performs the bonding of the tissues from one point with minimum damage by using thread in all closed operations including laparoscopic and thoracoscopic operations and that is being moved by an actuator connected to the body. The developed suture device includes at least one needle shaped in a manner to form a semi-circle and including at least one pointed end and that is connected to the thread, at least one movement channel that guides the movement of the needle by taking the movement axis of the needle as center, plurality of cylinders that align around the movement channel, being moved by at least one actuator and enables the needle move in the respective direction within the movement channel by contacting it, and at least one needle bearing beds the cylinders.

The structural and characteristic features and all advantages of the invention shall be better understood by the Figures and the detailed description that refers to these Figures provided below, therefore the invention shall be evaluated by taking these figures and the detailed description into account.

Figures that might be helpful for the invention to be understood

In order for the structure of the present invention and its advantages with the additional elements to be fully understood, it shall be evaluated with the Figures that are explained below.

Figure – 1:	The front view of the suture device of the invention.
Figure – 2:	The side view of the suture device of the invention.
Figure – 3:	The side view of the suture device of the invention, with no handle.
Figure – 4:	The perspective view of the suture device of the invention, with no handle.
Figure – 5:	The partial view of the suturing module and the juncture included in the suture device of the invention.
Figure - 6:	The partial perspective view of the suturing module included in the suture device of the invention.
Figure - 7:	The partial perspective view of the needle bearing included in the suturing module of the invention.
Figure - 8a, 8b:	These are the top sectional view of the needle bearing included in the suturing module of the invention when the needle is in different positions.
Figure - 9:	The side sectional view of the needle bearing included in the suturing device of the invention.
Figure - 10:	These are the needles included in the suture device of the invention, in different positions.
Figure – 11:	The view of needles in the suture device of the invention in open position.
Figure – 12:	The view of needles in the suture device of the invention in a close view from the thread Connection point.
Figure - 13:	The view of needles in the suture device of the invention in the production process.

Part References

10	Suture device	41b	Connection point
20	Body	42	Movement channel

21	Juncture	43	Cylinder
30	Handle	44	Needle bearing
31	Control panel	45	Chassis
32	Indicator	50	Thread
33	Power source	60	Cutting template
34	Control unit	70	Bending template
35	Actuator	80	Crushing template
36	Drive shaft	A	Cutting
37	Reductor	B	Bending
40	Suturing module	C	Crushing
41	Needle	x	Rotating axis
41a	Pointed end	y	Folding axis

Detailed Description of the Invention

With the invention, a suture device (10) is developed that performs the bonding of the tissues from one point with minimum damage by using a thread (50) in all closed operations, including laparoscopic and thoracoscopic operations, and that is moved by an actuator (35) that is connected to a body (20). Different from the known applications, the suture device (10) comprises at least one needle (41) shaped in a manner to form a semi-circle and including at least one pointed end (41a) and that is connected to the thread (50), at least one movement channel (42) that guides the movement of the needle (41) by taking the movement axis (x) as center, plurality of cylinders (43) that align around the movement channel (42) and being moved by at least one actuator (35) and enables the needle (41) move in the respective direction within the movement channel (42) by contacting it, and at least one needle bearing (44) that beds the cylinders (43).

In Figure 1 and 2, top and bottom views of the suture device (10) are provided respectively. A handle (30) enabling the handling takes place on one side of the linear long body (20) while on the other side the suturing module (40) protecting the needle bearing (44) is located. The suture device (10) is controlled by handling the handle (30), it reaches to the operation area with body (20) and suturing is performed by suturing module (40). A juncture (21), which is shown in Figure 4 and of which the details are provided in figure 5, enables the connection between the body (20) and suturing module (40), naturally between the body (20) and needle bearing (44). In

addition, the juncture (21) enables the rotating movement of the needle (41) with respect to the body (20).

In a preferred embodiment, the actuator (35) is an electric motor and operates with the energy supplied by a power source (33). The power source (33) can be a cable fed by an outer source as well as it can be battery type energy storage. A control unit (34) which regulates the functions of the actuator (35) is located in the handle (30) in preferred embodiment and it is managed by a control panel (31) formed on the handle (30). An indicator (32), which is in screen form, enables monitoring the data that comes from the control unit (34) or goes to the control unit (34).

In Figure 3, a side section view of the suture device (10) is given. The movement transmission from the actuator (35) is performed by the drive shaft (36) along the body (20). A reductor (37) that is located between the actuator (35) and the drive shaft (36) aims regulating the movement and providing it on the desired level.

A perspective view of the suturing module (40) is given in Figure 6. The circular form of the movement channel (42) is centered in the same rotating axis (x) with the needle (41). Thus, needle (41) can move bidirectionally in the same route without convulsion. A chassis (45) that is located in the suturing module (40) and is composed of two parts, mediates the connection between the drive shaft (36) and needle bearing (44). As seen in Figure 7, the movement channel (42) is located between the needle bearings (44) that are located in parallel to each other and it is surrounded by the cylinders (43).

The top section views of the needle bearing (44) are provided in Figure 8a and 8b, when the needle (41) is in different positions. A side section view is given in Figure 9. The needle (41) enters into the movement channel (42) from one point and exits from it from another point while it rotates in the rotating axis (x). Suturing is performed with the thread (50) that is connected in this manner. In Figure 10, views of the needle (41) from different angles are provided. In the preferred embodiment, pointed ends (41 a) are formed in both ends of the needle (41) and a connection point (41 b), which helps the connection of the thread (50), is located on the needle (41) as shown in detail in Figure 12. As it can be seen in Figure 11, the needle (41) is composed of two identical parts that are symmetrical with respect to the folding axis (y).

In the preferred embodiment, the needle (41) has a special production process. The process flow chart can be seen in Figure 13. Here, in the first process step, two needle (41) forms that are symmetrical with respect to the folding axis (y) are cut (A) from the sheet metal plate with the help of a cutting template (60) and afterwards symmetric needle (41) forms are bent (B) with the help of bending template (70) upon the folding axis (y). Cutting template (60) has two parts and

it performs the cutting (A) process by pressing the raw materials stainless steel sheet metal or titanium series etc. in the production. After cutting (A), needle (41) with two-winged form, which are symmetrical with respect to the folding axis (y), exits the cutting template (60) as intermediate product, is passed to the second stage. In the second stage, bending template (70) makes the needle (41) with two-winged form double layered by bending (B) it on the folding axis (y) that is located in the center of the structure. Before the bending (B) step, thread (50) is located between the sheet metal and the bending continues until the desired pressure is applied. In the last step, folded needle (41) forms are crushed (C) with the help of crushing template (80) and the final form is obtained. In the crushing (C) step, a pressure that is higher than the bending (B) step is applied. The crushing (C) step is a process that enables the needle (41) to be seen as one piece and to have high endurance. The process is also called ironing. All side edges of the needle (41) are softened and the pointed ends (41 a) become sharper. At the same time, the fixation of the thread (50) to the needle (41) becomes clear during crushing (C) stage. It is designed that both ends of the final product needle (41) has pointed ends (41 a). It is designed that the middle part of the needle (41) shall be circular and thick and the thread (50) is fixed to the middle part of the connection point (41 b) of the needle (41). This way, needle (41) obtains the ability to move bidirectionally along the same rotating axis (x) (both clockwise and counter clockwise directions).

In the present invention, the needle (41) performs the semi-circle movement that all the surgeons are familiar with. The most distinguishing feature of the present invention is that the needle (41) with special form design operates in a manner that it can move along the cylinder (43) system and it has the thread (50) handling angle. The needle (41) that is used in the suture device (10) is described visually and it is designed in compliance with its geometrical lines. The needle (41) is an auxiliary element aiming to perform processes such as cutting and inserting and its production material is determined as stainless steel sheet metal of 316 L series. Nevertheless, different metals such as titanium series can also be used.

The operation principle of the suture device (10) is determined by the software loaded to the control unit (34) which is in the circuit card form. The operating modes of the suture device (10) on the indicator (32) that is located on the control unit (34) are determined by the control panel (31) that is also located on the control unit (34). These movements can be guided via the buttons that are located on the control panel (31). The suturing module (40) has the ability to perform a rotating movement of 45° to both directions. The actuator (35) with reductor (37) is the drive source and it is connected to the suturing module (40) thanks to the drive shaft (36) that is

located in the between. There are small metal cylinders (43) which provide the circular movement to the needle (41). Suturing process is performed by the virtue of the circular movement of the needle (41) that is located on the suturing module (40). Cylinders (43) take the movement from the drive shaft (36) that is connected to the actuator (35) and they are positioned with the needle bearing (44) in a manner that they cover the surface of the needle (41) completely. During the circular movement, needle (41) always stays within the movement channel (42) which is located in the active area of the cylinders (43) and therefore the continuation of the circular movement is obtained. The outer line of the needle (41) forms a complete circle. This is a requirement for obtaining the compliance with the movement channel (42). The control unit (34) includes a processor. 8 bit to 32 bit processors can be used upon the control unit (34). The indicator (32) can be used as tft or glcd, as desired. The actuator (35) can be optionally used with brush or without brush and as servo motor or step motor. The body (20) and the handle (30) and all the other parts can be plastic as well as they can be manufactured from stainless metal material. The suture device (10) can also be operated with computer controlled (USB, Bluetooth, Wi-Fi, etc.) when desired. The invention as it is, is used for the rapid suturing of the live tissues from one point and minimum damage in the operations that are performed with endoscopic surgical interventions.

CLAIMS

1. A suture device (10) performs the bonding of the tissues from one point with minimum damage by using thread (50) in all closed operations, including laparoscopic and thoracoscopic operations and it is moved by an actuator (35) connected to a body (20) and, characterized by comprising;

- at least one needle (41) connected to the thread (50), shaped to form a semi-circle and includes at least one pointed end (41 a),
- at least one movement channel (42) guiding the movement of the said needle (41),
- plurality of cylinders (43) align around the movement channel (42), being moved by at least one actuator (35) and enables the needle (41) to move in the respective direction within the movement channel (42) by contacting it,
- at least one needle bearing (44) bedding the cylinders (43).

2. The suture device (10) according to Claim 1, characterized by comprising at least one suturing module (40) protecting the needle bearing (44).

3. The suture device (10) according to Claim 1 or 2, characterized by comprising at least one juncture (21) connecting the body (20) with the suturing module (40) and/or the needle bearing (44), enables the rotating movement with respect to the body (20).

4. The suture device (10) according to Claim 1, characterized in that the actuator (35) is an electric motor.

5. The suture device (10) according to Claim 4, characterized by comprising at least one control unit (34) regulating the functions of the actuator (35).

6. The suture device (10) according to Claim 5, characterized by comprising at least one control panel (31) administering the control unit (34).

7. The suture device (10) according to Claim 5, characterized by comprising at least one indicator (32) enables monitoring the data that comes from the control unit (34) or goes to the control unit (34).

8. The suture device (10) according to Claim 4, characterized by comprising at least one power source (33) providing the needed energy to the actuator (35).

9. The suture device (10) according to Claim 1, characterized by comprising at least one handle (30) connected to the body (20) and enables handling.

10. The suture device (10) according to Claim 1, characterized by comprising at least one drive shaft (36) provides the transmission of the movement from the actuator (35).

11. The suture device (10) according to Claim 1, characterized by comprising at least one reductor (37) regulating the movement provided from the actuator (35).

12. The suture device (10) according to Claim 1, characterized in that the needle (41) is composed of two identical parts symmetrical with respect to the folding axis (y).

13. The suture device (10) according to Claim 1, characterized by comprising a connection point (41b) formed on the needle (41) and mediating the connection of the thread (50).

14. The suture device (10) according to Claim 10, characterized by comprising at least one chassis (45) connecting the drive shaft (36) with the needle bearing (44).

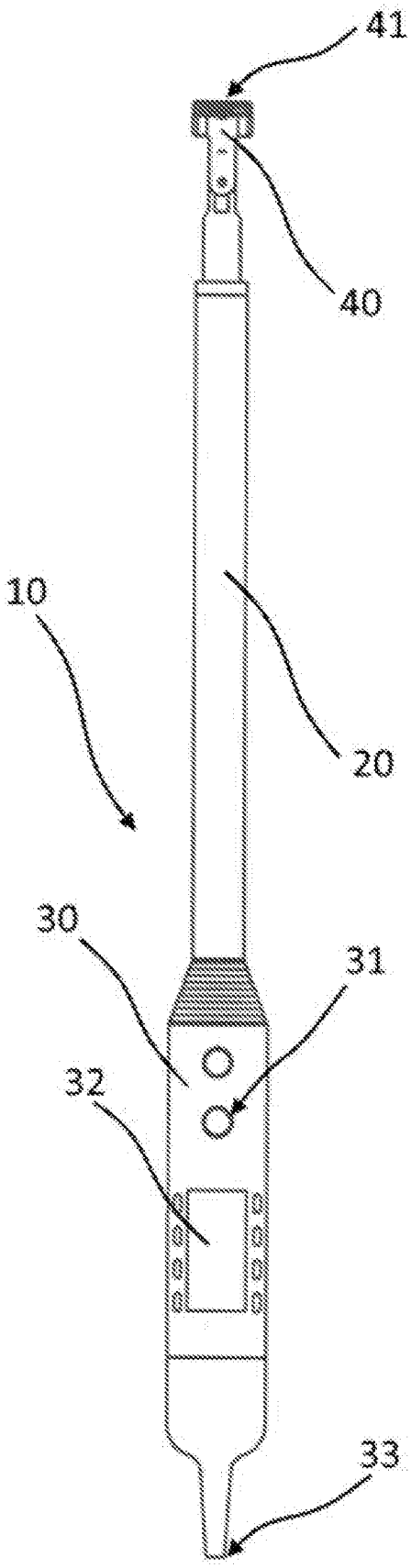

Figure - 1

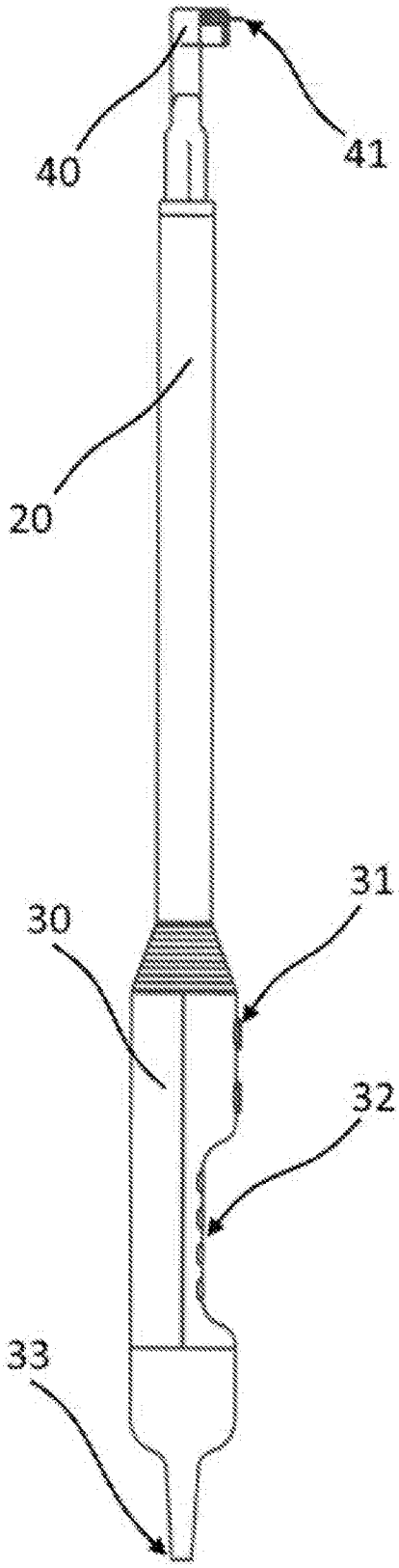

Figure - 2

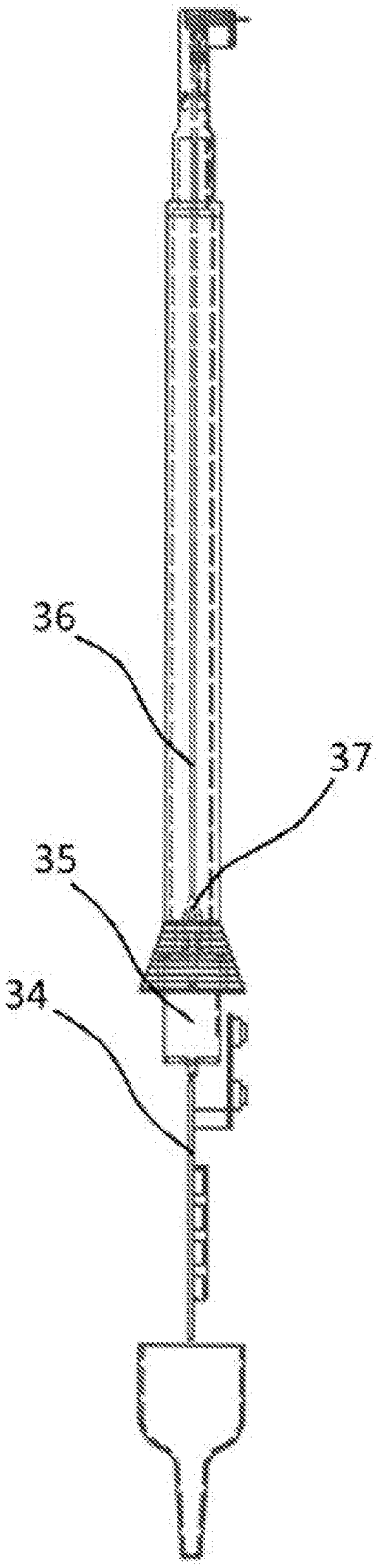

Figure - 3

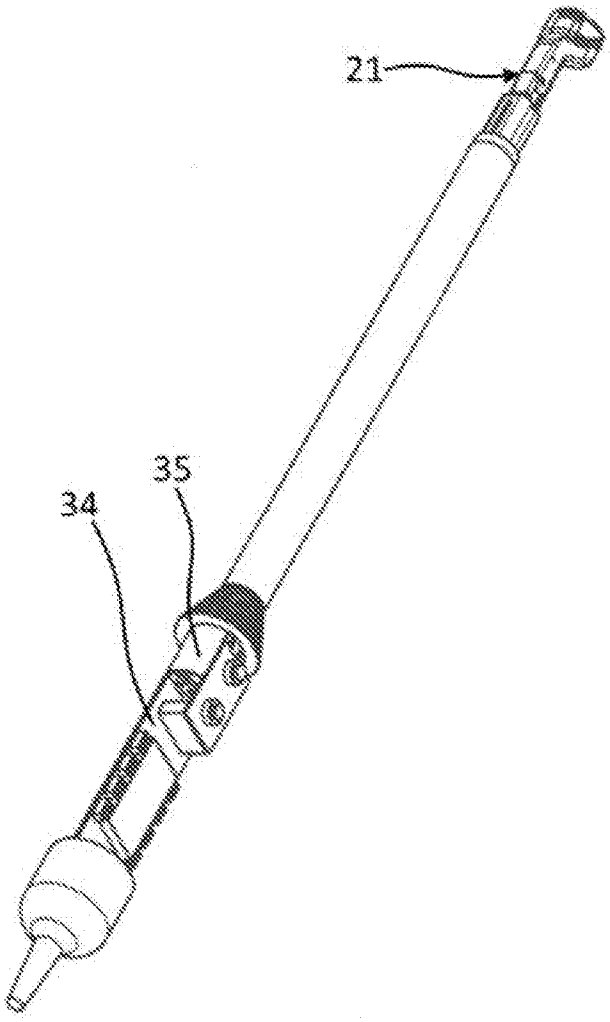

Figure - 4

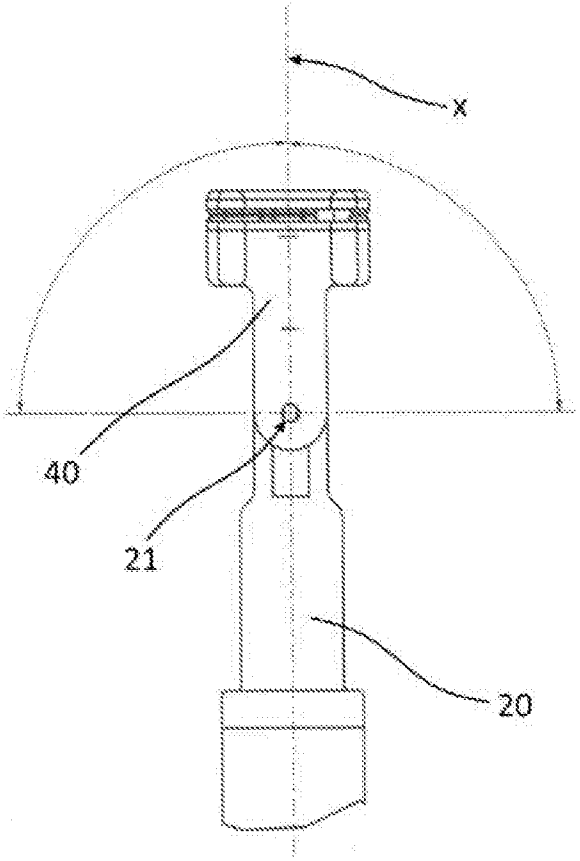

Figure - 5

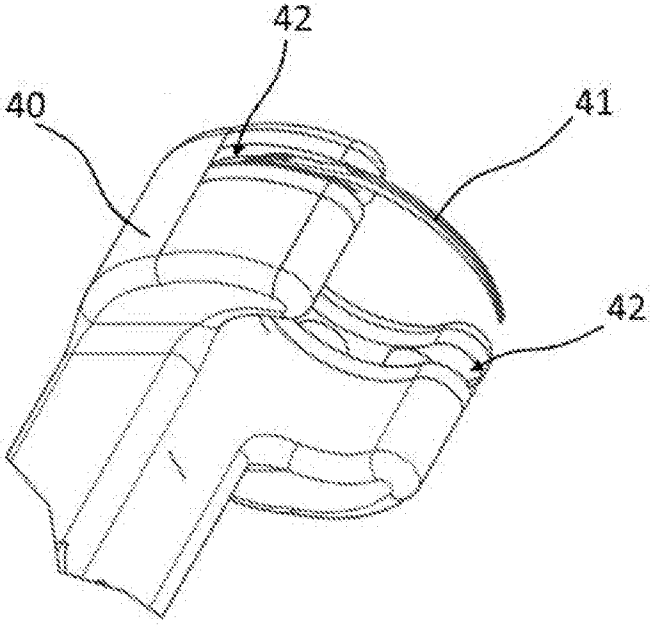

Figure - 6

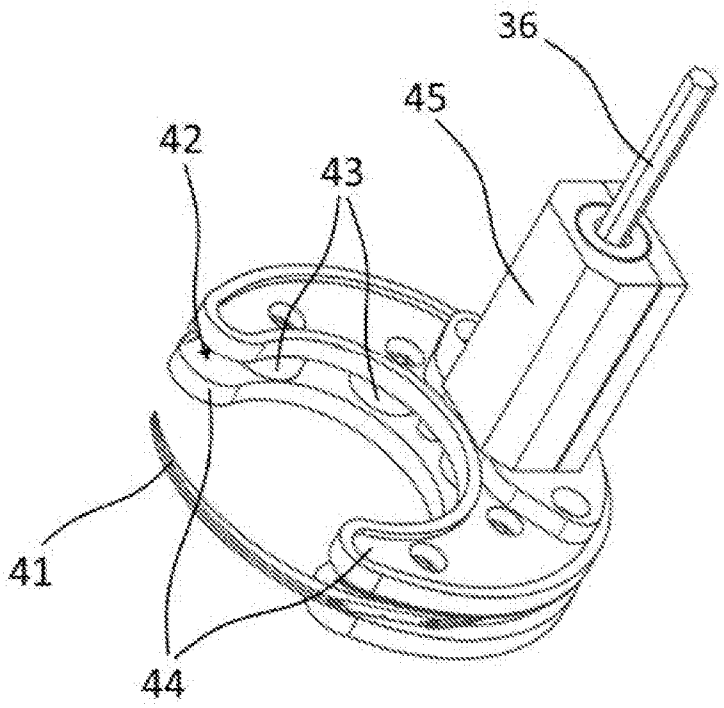

Figure - 7

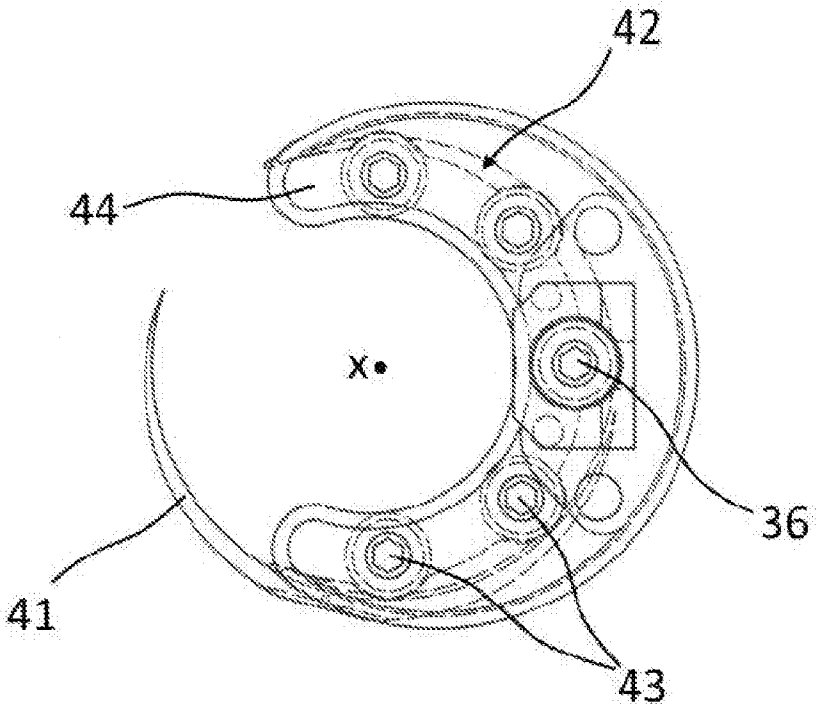

Figure - 8a

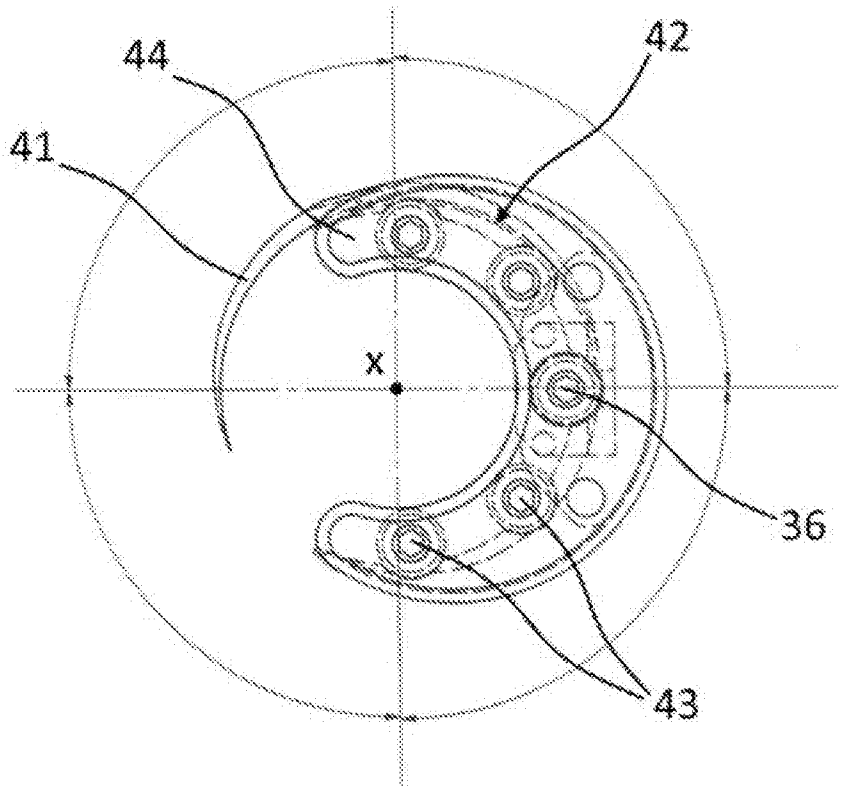

Figure - 8b

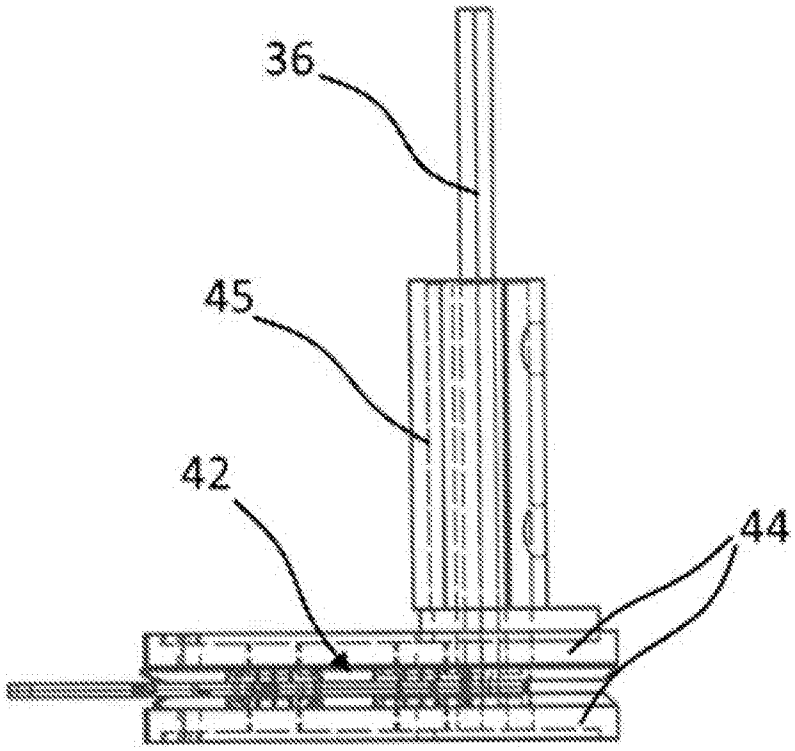

Figure - 9

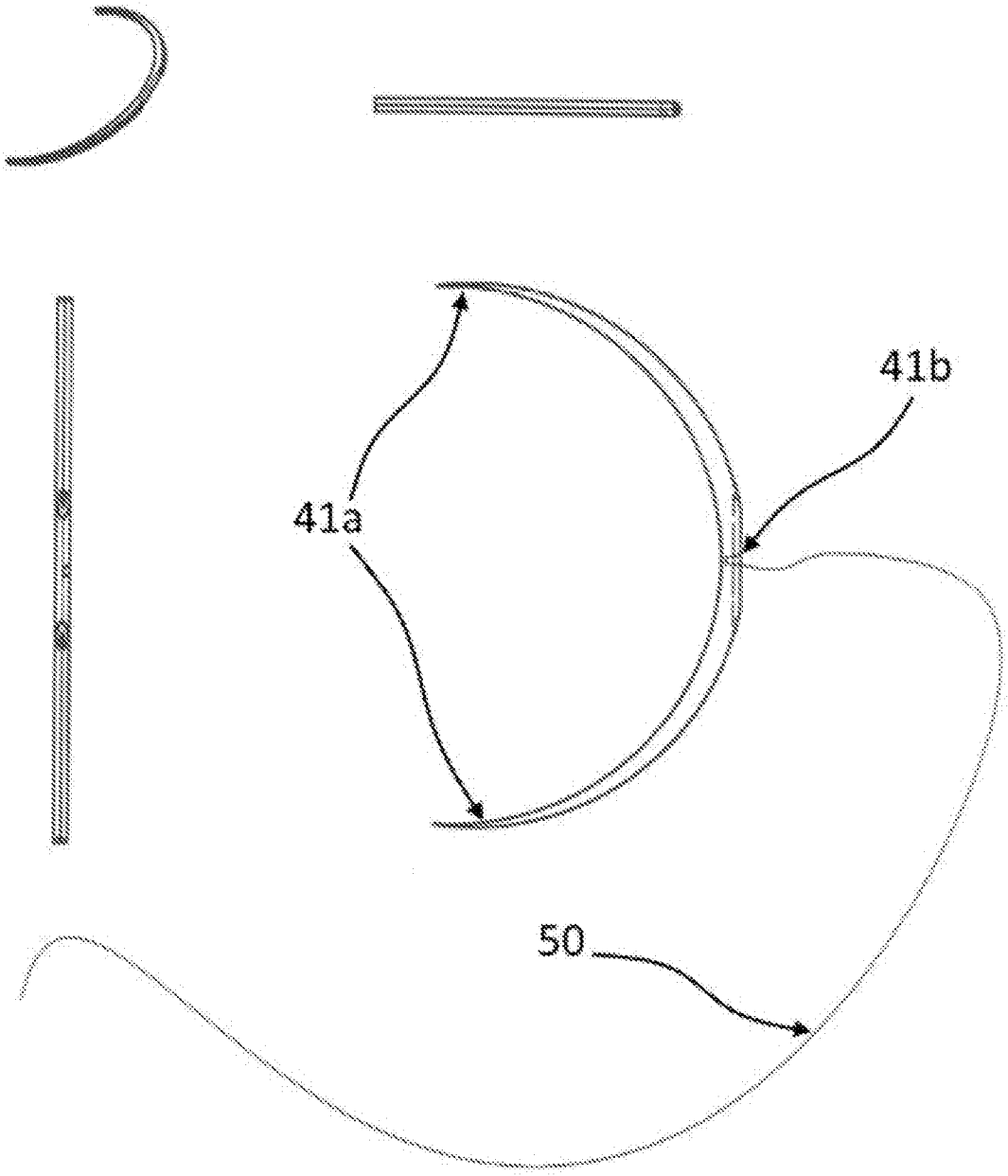

Figure - 10

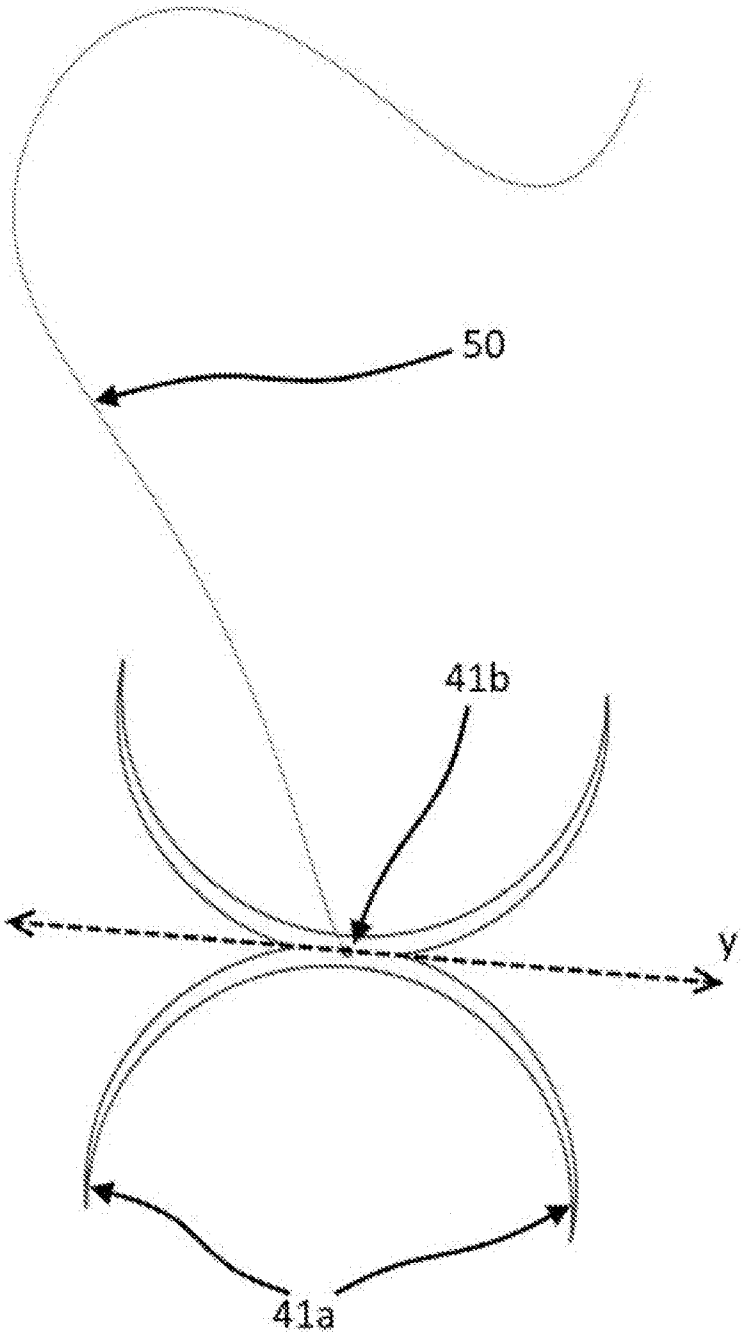

Figure - 11

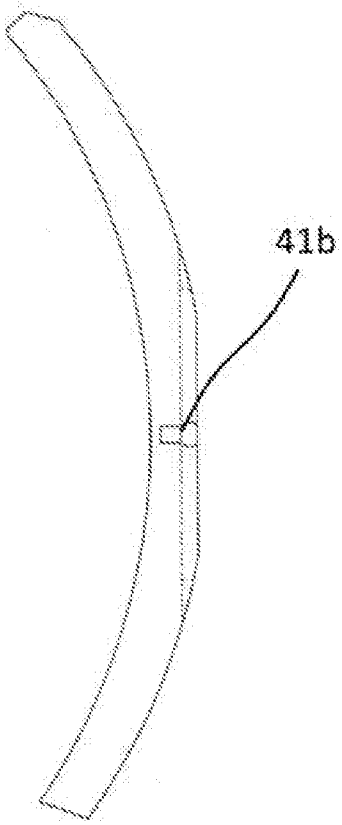

Figure - 12

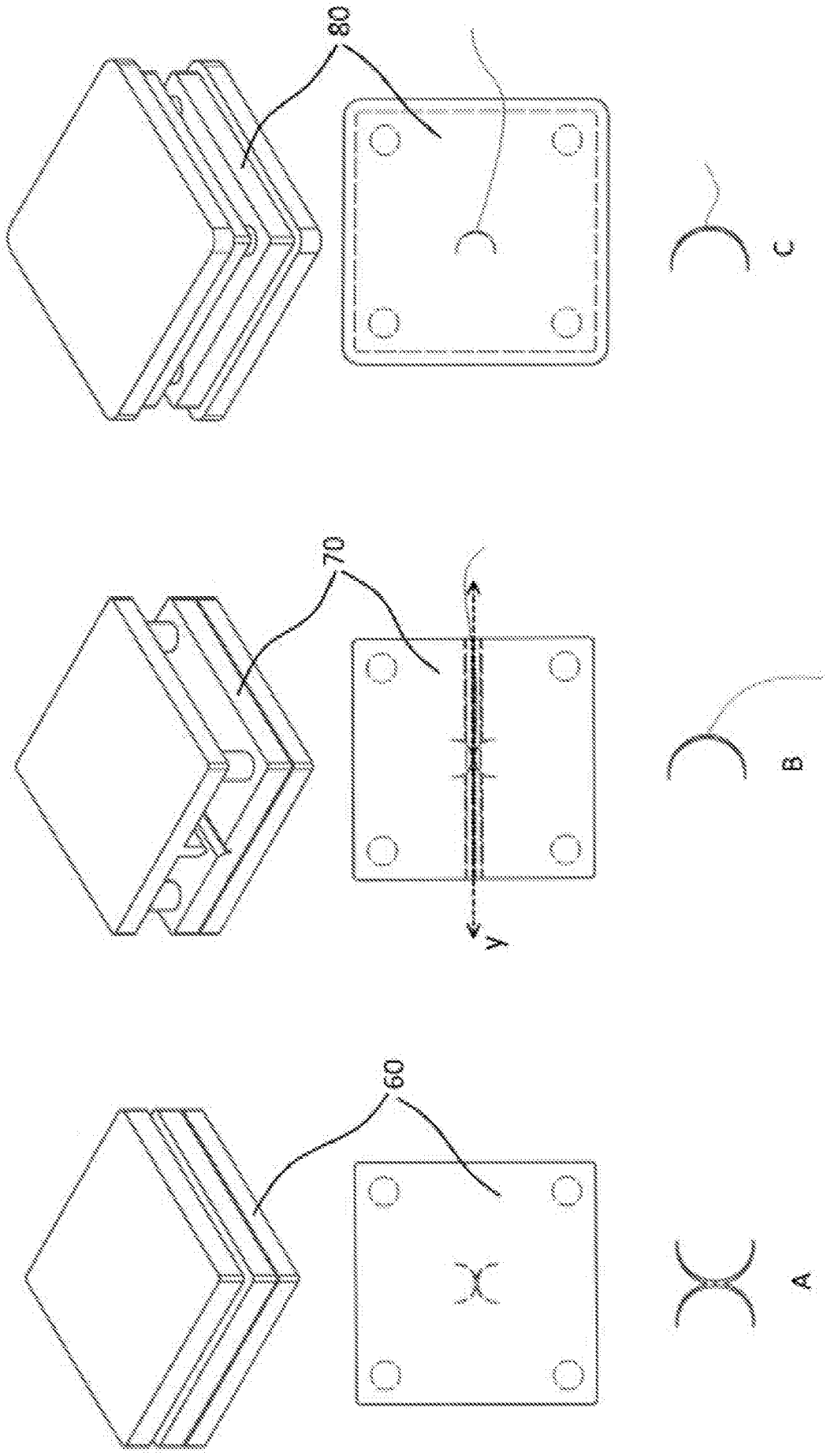

Figure - 13

INTERNATIONAL SEARCH REPORT

International application No
PCT/TR2017/05Q43O

A. CLASSIFICATION OF SUBJECT MATTER
INV. A61B17/04 A61B17/06
ADD.

According to International Patent Classification (IPC) or to both national classification and IPC

B. FIELDS SEARCHED

Minimum documentation searched (classification system followed by classification symbols)
A61B

Documentation searched other than minimum documentation to the extent that such documents are included in the fields searched

Electronic data base consulted during the international search (name of data base and, where practicable, search terms used)

EPO-Internal , WPI Data

C. DOCUMENTS CONSIDERED TO BE RELEVANT

Category*	Citation of document, with indication, where appropriate, of the relevant passages	Relevant to claim No.
X	US 2015/127025 Al (HAMI LTON HENRY H [US] ET AL) 7 May 2015 (2015-05-07) paragraph [0094] ; figures 19 , 20A-20C	1-14
A	US 2007/088372 Al (GELLMAN BARRY N [US] ET AL) 19 Apri l 2007 (2007-04-19) ci ted i n the appl i cati on the whole document	1-14
A	US 2012/150200 Al (MITELBERG VLADIMI R [US]) 14 June 2012 (2012-06-14) ci ted i n the appl i cati on the whole document	1-14
A	US 2002/193809 Al (MEADE JOHN C [US] ET AL) 19 December 2002 (2002-12-19) the whole document	1-14

-/ - -

[X] Further documents are listed in the continuation of Box C.

[X] See patent family annex.

* Special categories of cited documents :

"A" document defining the general state of the art which is not considered to be of particular relevance

"E" earlier application or patent but published on or after the international filing date

"L" document which may throw doubts on priority claim(s) orwhich is cited to establish the publication date of another citation or other special reason (as specified)

"O" document referring to an oral disclosure, use, exhibition or other means

"P" document published prior to the international filing date but later than the priority date claimed

"T" later document published after the international filing date or priority date and not in conflict with the application but cited to understand the principle or theory underlying the invention

"X" document of particular relevance; the claimed invention cannot be considered novel or cannot be considered to involve an inventive step when the document is taken alone

"Y" document of particular relevance; the claimed invention cannot be considered to involve an inventive step when the document is combined with one or more other such documents, such combination being obvious to a person skilled in the art

"&" document member of the same patent family

Date of the actual completion of the international search	Date of mailing of the international search report
24 May 2018	05/06/2018

Name and mailing address of the ISA/	Authorized officer
European Patent Office, P.B. 5818 Patentlaan 2 NL - 2280 HV Rijswijk Tel. (+31-70) 340-2040, Fax: (+31-70) 340-3016	Smit , Jos

INTERNATIONAL SEARCH REPORT

International application No
PCT/TR2017/05043O

C(Continuation). DOCUMENTS CONSIDERED TO BE RELEVANT

Category*	Citation of document, with indication, where appropriate, of the relevant passages	Relevant to claim No.
A	US 2006/069396 Al (MEADE JOHN C [US] ET AL) 30 March 2006 (2006-03-30) the whole document -----	1-14
A	US 9 504 465 B2 (BOSTON SCI ENT SCIMED INC [US]) 29 November 2016 (2016-11-29) cited in the application the whole document -----	1-14
A	JP 2013 146613 A (ETHICON ENDO SURGERY INC) 1 August 2013 (2013-08-01) the whole document -----	1-14

INTERNATIONAL SEARCH REPORT

Information on patent family members

International application No
PCT/TR2017/05Q43O

Patent document cited in search report	Publication date	Patent family member(s)	Publication date
US 2015127025 Al	07-05-2015	CN 101677817 A	24-03-2010
		EP 2120728 A2	25-11-2009
		JP 5172865 B2	27-03-2013
		JP 2010521247 A	24-06-2010
		US 2008228204 Al	18-09-2008
		US 2008243147 Al	02-10-2008
		US 2013060262 Al	07-03-2013
		US 2014288581 Al	25-09-2014
		US 2015127025 Al	07-05-2015
		WO 2008113076 A2	18-09-2008
		WO 2008113080 A2	18-09-2008
US 2007088372 Al	19-04-2007	AU 2003248671 Al	31-12-2003
		CA 2486550 Al	24-12-2003
		EP 1511429 A2	09-03-2005
		US 2003233104 Al	18-12-2003
		US 2003233107 Al	18-12-2003
		US 2003233108 Al	18-12-2003
		US 2006004385 Al	05-01-2006
		US 2007088372 Al	19-04-2007
		US 2009062818 Al	05-03-2009
		US 2012283755 Al	08-11-2012
		WO 03105701 A2	24-12-2003
US 2012150200 Al	14-06-2012	AU 2012253729 Al	28-11-2013
		AU 2016213926 Al	01-09-2016
		AU 2016213927 Al	01-09-2016
		AU 2017201998 Al	13-04-2017
		AU 2017254809 Al	16-11-2017
		AU 2017254810 Al	16-11-2017
		BR 112013028784 A2	31-01-2017
		CA 2834773 Al	15-11-2012
		CA 2985286 Al	15-11-2012
		CA 2985294 Al	15-11-2012
		CN 103813756 A	21-05-2014
		CN 105559841 A	11-05-2016
		CN 105725954 A	06-07-2016
		EP 2706925 Al	19-03-2014
		EP 3095391 A2	23-11-2016
		EP 3141193 Al	15-03-2017
		ES 2566379 T3	12-04-2016
		JP 6317405 B2	25-04-2018
		JP 2014519880 A	21-08-2014
		JP 2017018627 A	26-01-2017
		JP 2018030008 A	01-03-2018
		KR 20140044813 A	15-04-2014
		KR 20170020931 A	24-02-2017
		US 2012149979 Al	14-06-2012
		US 2012150200 Al	14-06-2012
		US 2012157765 Al	21-06-2012
		US 2016045197 Al	18-02-2016
		WO 2012154648 Al	15-11-2012
US 2002193809 Al	19-12-2002	AU 2002256296 B2	07-12-2006
		AU 2007201016 Al	29-03-2007
		AU 2007201017 Al	29-03-2007
		CA 2450662 Al	27-12-2002
		CN 1722989 A	18-01-2006

INTERNATIONAL SEARCH REPORT

Information on patent family members

International application No
PCT/TR2017/05Q43O

Patent document cited in search report	Publication date	Patent family member(s)	Publication date
		CN 101513356 A	26-08-2009
		CN 101623206 A	13-01-2010
		EP 1406545 A2	14-04-2004
		EP 2292157 A2	09-03-2011
		EP 2308391 Al	13-04-2011
		JP 4276065 B2	10-06-2009
		JP 5116625 B2	09-01-2013
		JP 5346539 B2	20-11-2013
		JP 6116628 B2	19-04-2017
		JP 2004533880 A	11-11-2004
		JP 2009078151 A	16-04-2009
		JP 2009078152 A	16-04-2009
		JP 2013230382 A	14-11-2013
		JP 2016073620 A	12-05-2016
		MX PA03011392 A	07-03-2005
		US 9717493 Bl	01-08-2017
		US 9717495 Bl	01-08-2017
		US 2002193809 Al	19-12-2002
		US 2005216038 Al	29-09-2005
		US 2006173491 Al	03-08-2006
		US 2011288582 Al	24-11-2011
		US 2011295278 Al	01-12-2011
		US 2017014127 Al	19-01-2017
		us 2017086820 Al	30-03-2017
		us 2017086821 Al	30-03-2017
		us 2017119377 Al	04-05-2017
		us 2017215868 Al	03-08-2017
		us 2017215874 Al	03-08-2017
		us 2017215875 Al	03-08-2017
		us 2017215877 Al	03-08-2017
		us 2017296164 Al	19-10-2017
		us 2017296165 Al	19-10-2017
		us 2017296166 Al	19-10-2017
		us 2017325807 Al	16-11-2017
		us 2018042605 Al	15-02-2018
		Wo 02102226 A2	27-12-2002
US 2006069396 Al	30-03-2006	EP 1791476 A2	06-06-2007
		JP 4855405 B2	18-01-2012
		JP 2008513144 A	01-05-2008
		US 2006069396 Al	30-03-2006
		US 2008255590 Al	16-10-2008
		W0 2006034209 A2	30-03-2006
US 9504465 B2	29-11-2016	AU 2003254006 Al	09--02--2004
		CA 2491153 Al	29--01--2004
		EP 1523276 Al	20--04-2005
		US 2004015177 Al	22--01--2004
		US 2005222589 Al	06--10--2005
		US 2011060352 Al	10--03--2011
		US 2012035626 Al	09--02--2012
		US 2013103056 Al	25--04--2013
		US 2015100073 Al	09--04-2015
		WO 2004008973 Al	29--01--2004
JP 2013146613 A	01-08-2013	NONE	