(12) UK Patent Application (19) GB (11) 2 284 680 (13) A

(43) Date of A Publication 14.06.1995

(21) Application No 9325433.2

(22) Date of Filing 13.12.1993

(71) Applicant(s)
Central Research Laboratories Limited

(Incorporated in the United Kingdom)

Dawley Road, HAYES, Middlesex, UB3 1HH, United Kingdom

(72) Inventor(s)
Ian Alexander Shanks
Christoph Dobrusskin

(74) Agent and/or Address for Service
Robin Geoffrey Marsh
Thorn EMI Patents Limited, Central Research Laboratories, Dawley Road, Hayes, Middlesex, UB3 1HH, United Kingdom

(51) INT CL^6
G02B 27/22

(52) UK CL (Edition N)
G2J JX15

(56) Documents Cited
GB 2177842 A **GB 1543616 A** **EP 0460873 A1**
WO 90/05944 A2 **WO 83/03019 A1**

(58) Field of Search
UK CL (Edition M) **G2J JBSX1 JHU JMR2 JVAX JX15**
INT CL^5 **G02B**
WPI

(54) Apparatus for displaying a suspended image

(57) Apparatus for displaying an image 14 suspended in space above an opaque horizontal surface such as a tabletop or vehicle dashboard 2, of an object 8 below the surface, comprises a beamsplitter window 4 in the surface and a retroreflector 6 in a path for light reflected by the beamsplitter. The original image may for example be a VDU screen, a projected image or vehicle instrument panel. One or more retroreflectors may be located above and/or below the surface 2. The object may be flat and at 90° or parallel to the surface. A louver film 12 is shown.

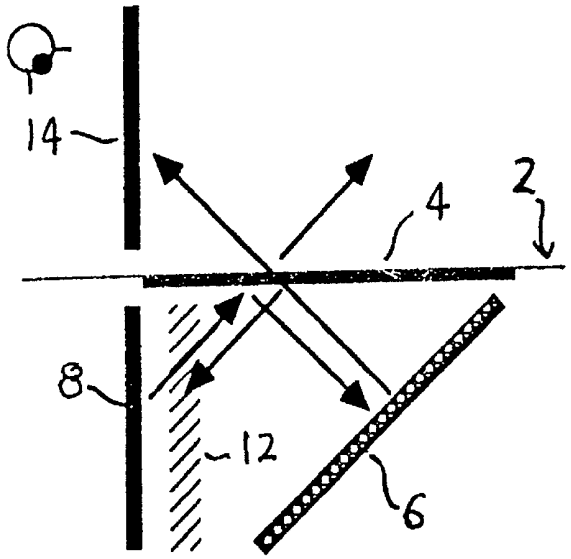

Figure 2

GB 2 284 680 A

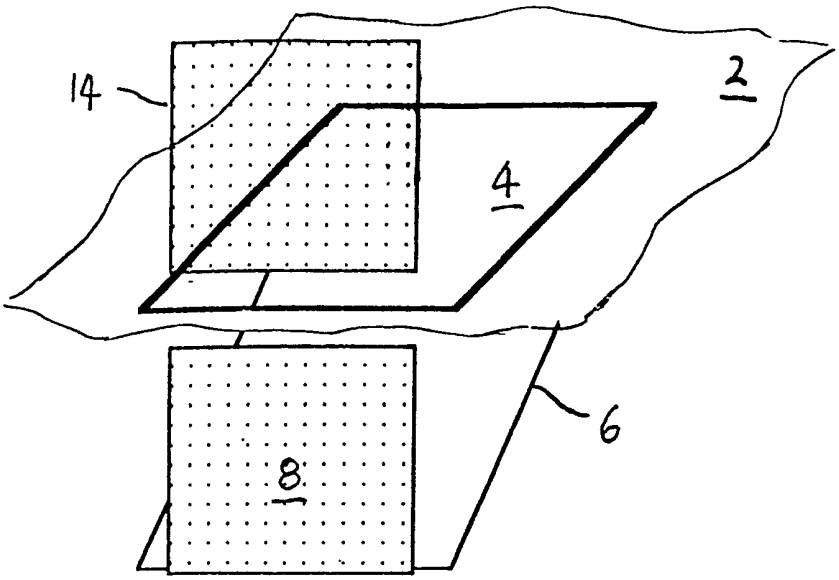

Figure 1

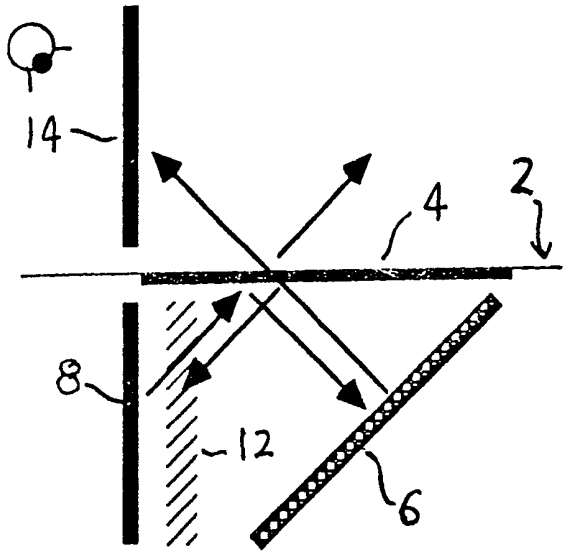

Figure 2

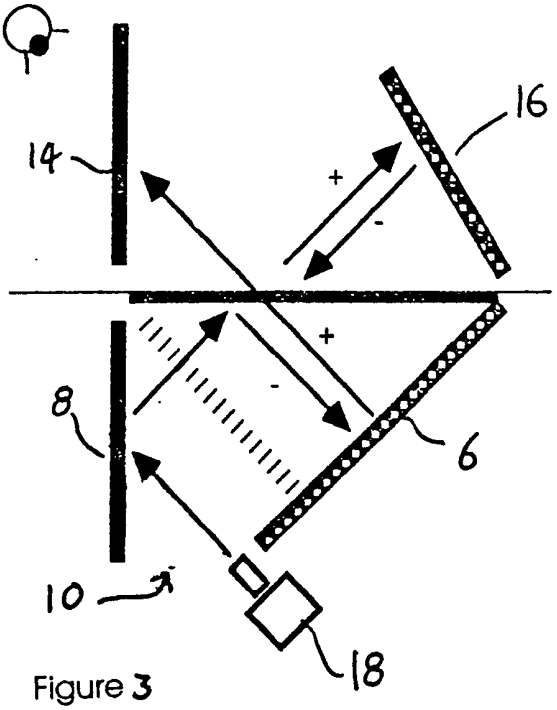

Figure 3

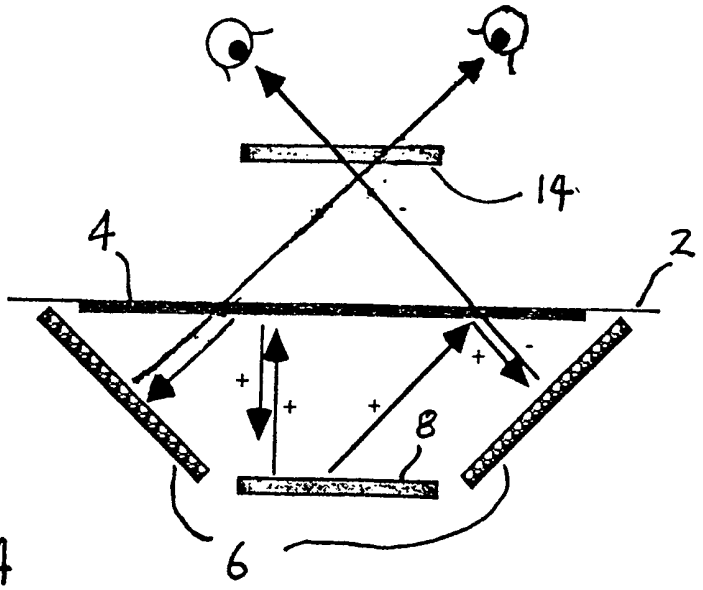

Fig 4

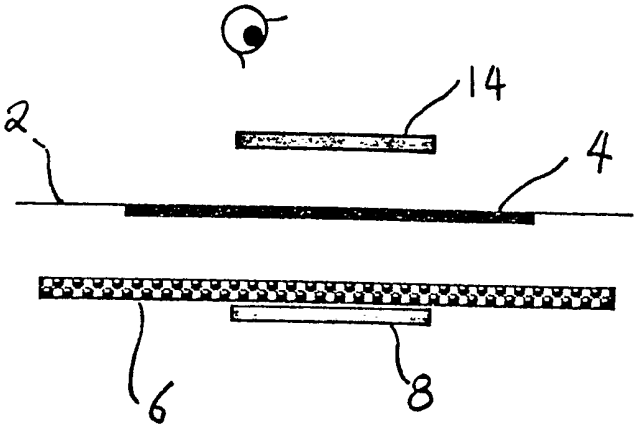

Fig 5

APPARATUS FOR DISPLAYING AN IMAGE

This invention relates to apparatus for displaying an image of an object, comprising a beamsplitter positioned in a path for light from the object, and retroreflector means positioned in a path for light from the object which has been transmitted or reflected by the beamsplitter.

Our copending application, EP0460873, discloses an apparatus comprising an array of retroreflectors, and a beamsplitter arranged to direct light from an object on one side of the beamsplitter towards the array of retroreflectors, and to direct light reflected from the array to form the image on the other side of the beamsplitter. The image may be suspended in space and appears to be three dimensional.

According to the present invention, there is provided an apparatus as defined in the first paragraph, characterised in that the beamsplitter is mounted in an aperture in an opaque surface.

This apparatus may be used, for example, for displaying an image of a VDU above a tabletop, or for displaying an image of a dashboard display of a vehicle.

In order that the present invention may be more readily understood, reference will now be made, by way of example, to the accompanying drawings, in which:

Figure 1 is a perspective view of an apparatus according to the invention;

Figure 2 is a cross-sectional side view of the apparatus of Figure 1;

Figures 3, 4 and 5 are cross-sectional side views of alternative apparatuses according to the invention.

Referring to Figures 1 and 2, an opaque surface 2 such as a tabletop, shown broken away, includes a beamsplitter window 4 mounted in an aperture therein. In this embodiment, retroreflector means comprising an array of retroreflectors, such as a sheet 6 of corner-cubes, is positioned in a path for light which has been reflected by the beamsplitter 4. In this

example it is positioned at an acute angle thereto, which is about 45°, so as to form the second side of a triangle therewith. An object 8 such as a picture displayed on a VDU screen is positioned along the third side of the triangle, in this example at about 90° to the beamsplitter. Alternatively, the screen may be positioned parallel to the beamsplitter, or at any other orientation where light from the object reaches the beamsplitter. Other objects such as three-dimensional objects may also be displayed by the apparatus by placing them in an equivalent position.

In a preferred embodiment, means for screening the retroreflector 6 from the object is provided, such as a louvre film 12 in front of the object 8. As indicated by arrows in figure 2, the beamsplitter 4 reflects light from the object 8 towards the retroreflector 6. In addition some of the light is transmitted by the beamsplitter 4 and is 'lost'. The beamsplitter 4 also transmits light reflected from the retroreflector 6 to form the suspended image 14 opposing the object 8 with respect to the beamsplitter 4. In addition, some of the light is reflected by the beamsplitter back towards the original image 8.

In the embodiment shown in Figure 3, a further array of retroreflectors 16 is positioned in a path for light which has been transmitted by the beamsplitter. In this example, the further array opposes the retroreflector 6 with respect to the beamsplitter 4; that is, it forms a triangular arrangement with the beamsplitter 4 and the suspended image 14. The further array of retroreflectors 16 directs light which is transmitted by the beamsplitter 4 directly from the original image 8 back towards the beamsplitter 4 to prevent 'loss' of this light. In an alternative embodiment of the invention, the array of retroreflectors 6 in a path for light which is reflected by the beamsplitter 4 could be omitted.

In the embodiment of Figure 3, the object 8 is a projection screen, and an image is formed thereon by a projector 18. The projector 18 is shown positioned in the gap 10 between the retroreflector array 6 and the object 8, but

may have other positions. For example it may be positioned in an aperture in the retroreflector array 6.

As indicated by plus and minus signs adjacent arrows in the Figure, the beamsplitter may be polarisation selective, transmitting light having one type of circular polarisation and reflecting light having the other type. For example, it may comprise layers of cholesteric liquid crystal polymers reflecting different spectral regions of circularly polarised light of one sense so as to reflect white light (ie the whole visible spectrum) of this sense.

Additionally, the object may be arranged to emit circularly polarised light, in which case one of the arrays 6, 16 may be omitted, since all of the light from the object could be of the type which is either reflected or is transmitted by the selective beamsplitter. This could be achieved by using a transmissive or reflective projection screen which either preserves or reverses polarisation, and a projector which produces linearly polarised light, such as an LCD projector, combined with a quarter wave plate. A transmissive such screen is disclosed in GB 1509180.

In the embodiment shown in Figure 4, the retroreflector means comprises a pair of opposed retroreflector arrays 6 on opposite sides of the object 8, here shown as a VDU screen which is substantially parallel to the beamsplitter 4. The suspended image 14 may now be viewed from opposite directions as indicated by the arrows in the Figure. Modifications of this embodiment might include a curved array of retroreflectors having a frustoconical shape providing an image viewable all around. Alternatively such an array could have a plurality of facets allowing viewing from a plurality of predetermined directions.

In a similar manner to the embodiment of Figure 3, further retroreflectors could be positioned in a path for light transmitted by the beamsplitter; that is on the same side of the beamsplitter as the suspended image 14, to prevent loss of some light.

If it is required that the object 8 be directly viewable through the beamsplitter 4, the beamsplitter may have an opaque area (not shown) directly above the object 8. Alternatively, the beamsplitter 4 could be polarization selective, and the object 8 could be arranged to emit circularly polarised light, as indicated by plus and minus signs adjacent the arrows in the Figure.

The embodiment of Figure 5 is similar to that of Figure 4, but uses a single retroreflector 6 which is parallel to the beamsplitter 4 and which is half-transparent so as to allow light from the object 8 to pass therethrough. In an alternative embodiment, there could be an aperture in the retroreflector 6 directly above the object 8 so that the retroreflector 6 need not be half-silvered.

CLAIMS

1. Apparatus for displaying an image of an object, comprising a beamsplitter positioned in a path for light from the object, and retroreflector means positioned in a path for light from the object which has been transmitted or reflected by the beamsplitter, characterised in that the beamsplitter is mounted in an aperture in an opaque surface.

2. Apparatus as claimed in claim 1, wherein the object and the beamsplitter are substantially flat and the object is positioned at 90° to the beamsplitter.

3. Apparatus as claimed in claim 1 or 2, comprising means for screening the retroreflector means from the object.

4. Apparatus as claimed in claim 1, 2 or 3, comprising retroreflector means positioned in a path for light from the object which has been transmitted by the beamsplitter and in a path for light from the object which has been reflected by the beamsplitter.

5. Apparatus as claimed in any one of the preceding claims, wherein the beamsplitter is polarisation selective.

6. Apparatus as claimed in claim 5 when appended to claim 1, 2 or 3, wherein light from the object which reaches the beamsplitter is polarised.

7. Apparatus as claimed in any one of the preceding claims, wherein parts of the retroreflector means lie on opposite sides of any plane which is perpendicular to the beamsplitter and which intersects a given part of the object.

8. Apparatus substantially as described herein with reference to Figures 1 and 2 or Figure 3, 4 or 5 of the accompanying drawings.

Patents Act 1977
Examiner's report to the Comptroller under Section 17
(The Search report)

Application number
GB 9325433.2

Relevant Technical Fields

(i) UK Cl (Ed.M) G2J (JBSX1, JHU, JMR2, JVAX, JX15)

(ii) Int Cl (Ed.5) G02B

Search Examiner
R E HARDY

Date of completion of Search
24 FEBRUARY 1994

Databases (see below)
(i) UK Patent Office collections of GB, EP, WO and US patent specifications.

(ii) WPI

Documents considered relevant following a search in respect of Claims :-
ALL

Categories of documents

X: Document indicating lack of novelty or of inventive step.

Y: Document indicating lack of inventive step if combined with one or more other documents of the same category.

A: Document indicating technological background and/or state of the art.

P: Document published on or after the declared priority date but before the filing date of the present application.

E: Patent document published on or after, but with priority date earlier than, the filing date of the present application.

&: Member of the same patent family; corresponding document.

Category	Identity of document and relevant passages		Relevant to claim(s)
A	GB 2177842 A	(LIVING IMAGES) Figure 1	Claim 1
A	GB 1543616 A	(TEKNO) Figure 2	Claim 1
A	EP 0460873 A1	(THORN EMI) the figures	Claim 1
A	WO 90/05944 A2	(S A R) the figure	Claim 1
A	WO 83/03019 A1	(KASSIES) the figures	Claim 1

Databases: The UK Patent Office database comprises classified collections of GB, EP, WO and US patent specifications as outlined periodically in the Official Journal (Patents). The on-line databases considered for search are also listed periodically in the Official Journal (Patents).