E. W. CHANDLER.

MACHINE FOR SORTING TICKETS AND THE LIKE.

APPLICATION FILED OCT. 1, 1915.

1,295,432. Patented Feb. 25, 1919.

4 SHEETS—SHEET 1.

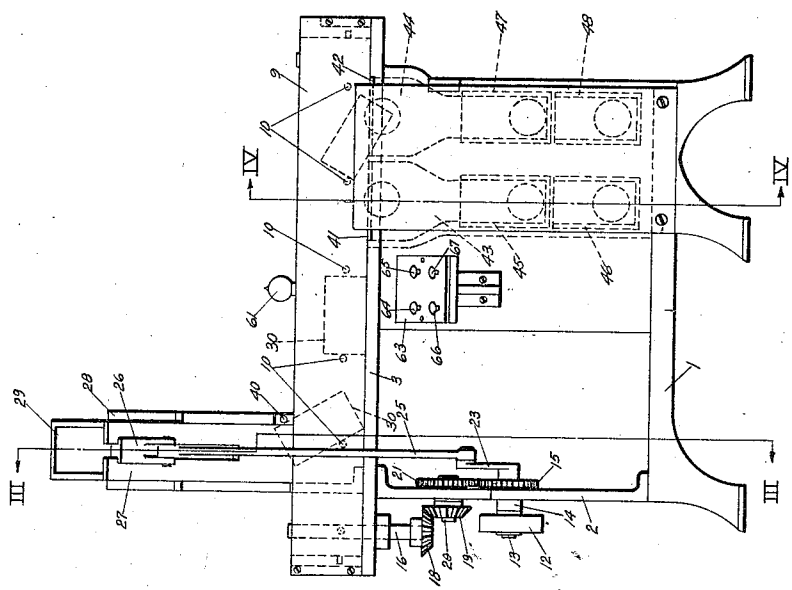

Fig. II

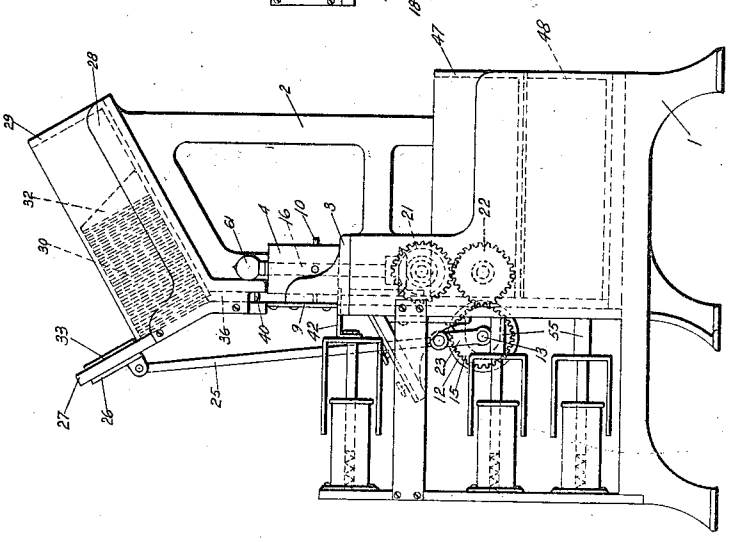

Fig. I

Inventor:
E. W. Chandler
By
Joseph L. Atkins
Attorney.

THE NORRIS PETERS CO., PHOTO-LITHO., WASHINGTON, D. C.

E. W. CHANDLER.

MACHINE FOR SORTING TICKETS AND THE LIKE.

APPLICATION FILED OCT. 1, 1915.

1,295,432.

Patented Feb. 25, 1919.

4 SHEETS—SHEET 2.

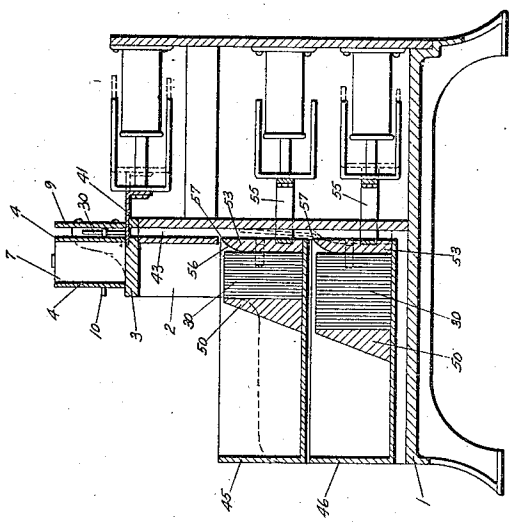

FIG. 4.

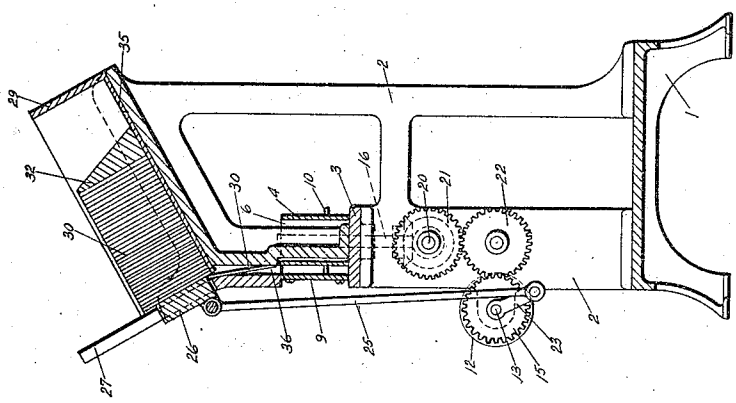

FIG. 3.

Inventor:

E. W. Chandler.

By Joseph L. Atkins

Attorney.

THE NORRIS PETERS CO., PHOTO-LITHO., WASHINGTON, D. C.

E. W. CHANDLER.

MACHINE FOR SORTING TICKETS AND THE LIKE.

APPLICATION FILED OCT. 1, 1915.

1,295,432.

Patented Feb. 25, 1919.

4 SHEETS—SHEET 3.

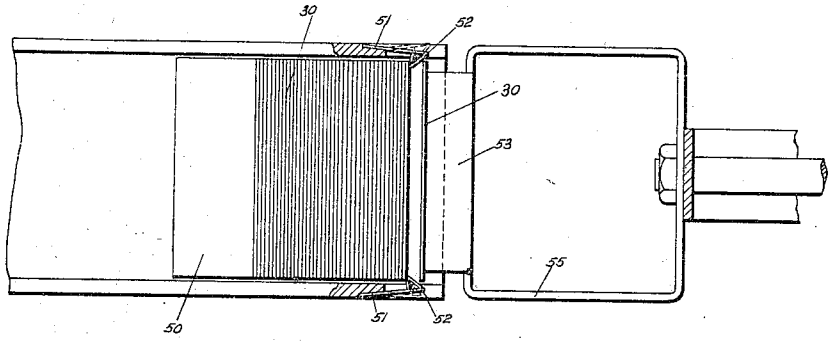

Fig. VI

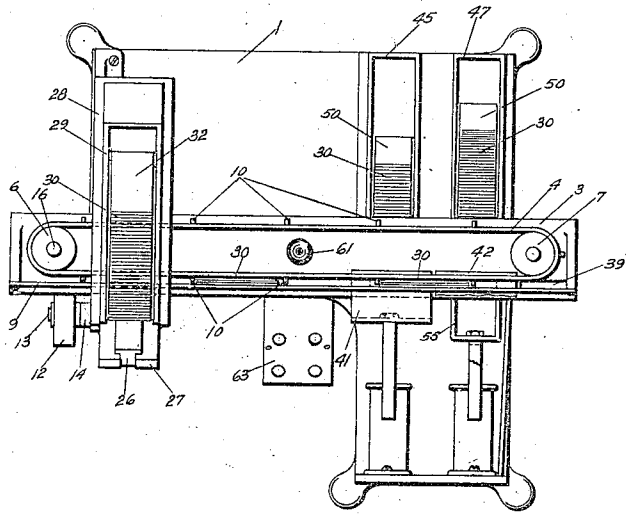

Fig. V

Inventor:
E. W. Chandler
By
Joseph R. Atkins
Attorney.

THE NORRIS PETERS CO., PHOTO-LITHO., WASHINGTON, D. C.

E. W. CHANDLER.

MACHINE FOR SORTING TICKETS AND THE LIKE.

APPLICATION FILED OCT. 1, 1915.

1,295,432. Patented Feb. 25, 1919.

4 SHEETS—SHEET 4.

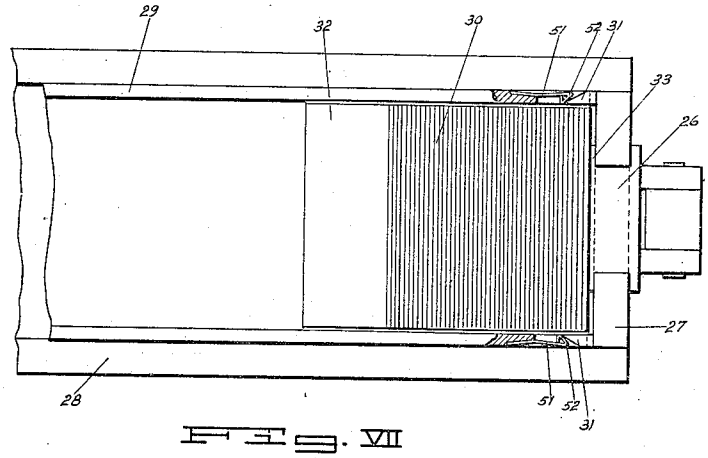

Fig. VII

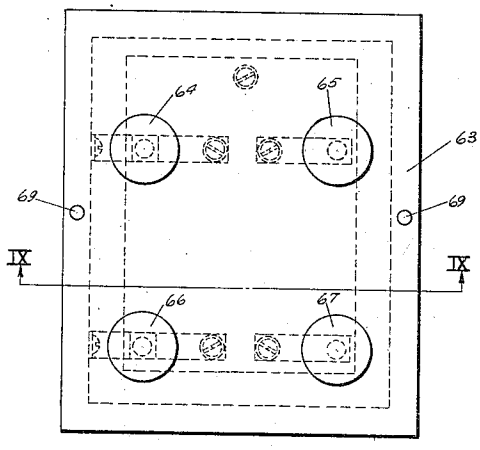

Fig. VIII

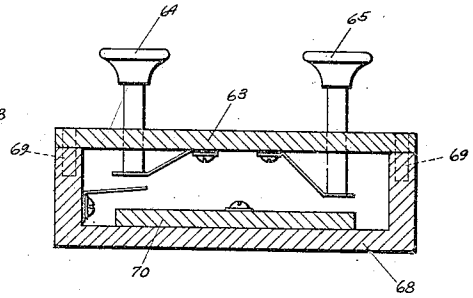

Fig. IX

Inventor:
E. W. Chandler
By
Joseph L. Atkins
Attorney.

THE NORRIS PETERS CO., PHOTO-LITHO., WASHINGTON, D. C.

UNITED STATES PATENT OFFICE.

ETHELBERT W. CHANDLER, OF PORTLAND, OREGON.

MACHINE FOR SORTING TICKETS AND THE LIKE.

1,295,432. Specification of Letters Patent. **Patented Feb. 25, 1919.**

Application filed October 1, 1915. Serial No. 53,540.

To all whom it may concern:

Be it known that I, ETHELBERT W. CHANDLER, citizen of the United States or America, residing at Portland, in the county of Multnomah, in the State of Oregon, have invented certain new and useful Improvements in Machines for Sorting Tickets and the like, of which the following is a specification, reference being had to the accompanying drawings.

My invention relates to machines for sorting articles, and particularly to machines for sorting and collecting thin flat articles, such as letters or tickets, into separate parcels differentiated, respectively, as by a common address or a common destination on each individual article, letter, or ticket. For convenience of description I present in the drawings and in the following specification my invention in the particular form of embodiment of a railroad-ticket sorting machine, but desire it to be understood that I do not restrict the scope of my invention to such application since it is obviously applicable to various other uses of more or less analogous descriptions.

In respect to the use of my invention for sorting railroad-tickets, it may be well to particularize that, in railroad business, tickets after having been sold, and subsequently taken up by car conductors ultimately find their way within the general offices of the company which issues them, into the hands of employees whose duty it is to sort them and collect them into bundles whereby they are made available for the auditing of accounts or other purposes. The operation of sorting requires the handling of each ticket, the identification of it, as for example by the name of the destination station printed on it, and the accurate distribution of all the tickets in accordance with such individual identification of them as the system employed requires. Where the number of tickets to be sorted is great, as it always is in railroad offices, the operation of sorting them is a slow and laborious and consequently expensive one. It is the object of my invention to provide a machine for performing, under proper manipulation, said sorting operation whereby the operation is facilitated, accelerated, and rendered more accurate, and all that at a considerable saving of time, labor, and expense.

What constitutes my invention will be hereinafter specified in detail and succinctly set forth in the appended claims.

In the accompanying drawings which constitute a part of this specification,

Figure I is an end elevation of a machine comprehending my invention in present preferred form of embodiment.

Fig. II is a front elevation of the subject matter of Fig. I.

Fig. III is a section as on the line III—III of Fig II, but showing the stripper at its down stroke instead of the upstroke as it appears in Fig. II.

Fig. IV is a section as on the line IV—IV of Fig. II.

Fig. V is a top plan view of the subject matter of Fig. II partly broken away and the interior of the case being made to expose its contents.

Fig. VI is a detail top plan view on an enlarged scale of a portion of one of the sorting boxes, its solenoid, and push-block detached.

Fig. VII is a detail top plan view on an enlarged scale of a portion of the hopper and the stripper detached.

Fig. VIII is a top plan view on an enlarged scale of the selector keyboard detached.

Fig. IX is a section on line IX—IX of Fig. VIII.

Referring to the numerals on the drawings wherein like numerals refer to like parts throughout, 1 indicates a base upon which, preferably, is carried the supporting frame or case 2 of my machine.

The shape and dimensions of the frame 2 may be varied at will. The machine illustrated in the drawings shows only such a plurality of sorting boxes as may correctly present the principle of my invention and as is susceptible of extensive multiplication to an indeterminate extent.

The case 2 is provided with a support preferably a table 3 for a traveling display carrier which is preferably made in the form of an endless belt 4, which is passed around drums 6 and 7 that rotate about vertical axes, respectively, provided for them on the table 3, upon which, preferably, the lower edge of the belt 4 travels.

The table 3 is provided with a preferably transparent front plate 9 that is substan-

tially coextensive with the front elevation of the belt 4 upon which, at intervals suitable for the accommodation of the size of tickets which the machine is designed and adapted to sort, is provided a continuous succession of studs 10, whose length, respectively, is such as snugly to fill the space between the belt 4 and the front plate 9 but without interfering in anywise with the freedom of travel of the belt.

12 indicates a main driving pulley fixed to a shaft 13 that is mounted in a suitable bearing 14 provided for it in the frame 2 and is preferably provided with a gear 15 as a means of communicating motion to the drum 6, which, to receive said motion, is provided preferably with a coaxial shaft 16 having a bevel gear 18 that meshes with a bevel gear 19 fixed to a shaft 20 near one end thereof and whose other end carries a fixed gear 21 that meshes through an intermediate gear 22 with the gear 15. The shaft 20 is carried in a suitable bearing provided for it in the frame 2.

The shaft 13 preferably carries a crank 23, fixed to its inner end opposite the pulley 12, and is, by said crank, through the mediation of a pitman 25, operatively connected with a sliding member 26 carried in a suitable guide-frame 27 provided for it in the forward end of a hopper 28 that is rigidly supported upon the case 2 in operative juxtaposition to the carrier or belt 4.

The hopper 28 is adapted to receive an open top box 29 having transverse dimensions to accommodate with loose fit tickets 30 which it is the object of my machine to sort as for the purpose hereinafter set forth. It is preferably provided with spring clips which serve to confine the tickets within the box but which are automatically disengaged from the tickets by lugs 31 in the forward end of the hopper when the box is set in place in the hopper. See Fig. VII. Its rear end is uptilted as shown in Fig. III, so that the tickets 30 are by gravity, assisted by a follow-block 32, urged toward the guide-frame 27 and against the sliding member 26 therein which, with effect due to reciprocation of the member 26 within its frame 27, obstructs the end of the hopper and controls the discharge of tickets therefrom.

The member 26 is denominated a stripper because its function is to strip off tickets one by one from the assemblage of tickets in the hopper in the operation of making delivery thereof to the belt 4. To accommodate it to its function of stripping tickets, the member 26 is provided on its inner face with a flat projection 33 which is preferably substantially coextensive in height and thickness with one of the tickets 30.

The bottom 35 of the box 29 is shorter, by the thickness of a ticket, substantially, than the box. Consequently when the stripper 26 is, in its travel, at the top of its guide-frame 27, the foremost ticket 30 of the assemblage of tickets in the box 29 advances under pressure of the follow-block 32 behind it into snug contact with the inner face of the guide-frame 27, along which, upon descent of the member 26, the projection 33 thereon engages and slides said foremost ticket across the edge of the abreviated bottom 35 of the box 29 into a guide-way 36 which establishes operative communication between the discharge end of the hopper and the belt 4. Provision being made in respect to the height of the projection 33 against its engaging the edge of a ticket on its upstroke, it follows that a ticket is fed out of the box 29 with each double reciprocation only of the stripper 26.

As has been specified the stripper 26 and the belt 4 both derive motion from the main driving pulley, but they may be timed to any desired rate of movement and to any relative speed preferred.

Each ticket 30 as it descends from the guide-way 36 enters the space between the belt 4 and the front-plate 9 into which it may fall end foremost or sidewise as may happen, provision being made in every case to insure its landing ultimately edgewise upon the table 3 between adjacent studs 10. It may happen of course, that the ticket will fall directly squarely between a pair of studs 10. In such case it will go forward at once under driving impulse of the stud 10 behind it. If, on the contrary, the ticket should land upon a stud 10 provision is made for imparting to it, in every instance, a uniform tilting motion, so as to insure its landing upon the table 3 in a predeterminate position in which it may be legible to the operator of the machine, for reasons which will hereinafter appear.

The provision referred to in the last paragraph is found in the setting of the studs 10 low down upon the belt 4 and in the locating of a stud 40 upon one wall of the guide-way 36. The relative disposition and manner of coöperation of the stud 40 and studs 10 are clearly illustrated in Fig. II. In that figure the middle ticket on the table 3 is shown in place between studs 10. The next in succession (the belt traveling from left to right) is shown in the only position which it may assume that requires provision for its adjustment, namely that position in which its lower forward corner rests upon the table 3. From that position the effect of the stud 40 is gently to sweep the ticket back about the stud 10 until its center of gravity is swung around to bring its lower rearward corner into contact with the table 3. Thereupon the travel of the belt 4 coöperates with the friction caused by the weight of the ticket against the table to carry the supporting stud 10 along the edge of the ticket

and to drop it, with uniform precision, between adjacent studs 10. It will be quite obvious that, if the ticket from the guideway 36 drops into position upon a stud 10 in which its lower rearward corner rests, in the first instance, upon the table 3, no reversal of the position of the ticket will be necessary, and it will drop directly into required position as described in the last preceding sentence.

When the tickets are supplied to the hopper they should be properly faced and preferably headed in one direction. Consequently when they reach the table 3 they are easily legible through the front plate 9.

The travel of the belt 4 carries the tickets along in succession behind the plate 9, and in the absence of further attention ultimately sweeps them from the table through the opening 39 at the end of said plate. In this regard my invention comprises one or more and preferably a series of selector-drops whereof one is clearly shown in Fig. IV. It consists essentially of a movable section in the table 3 which when closed allows the table to present an unbroken surface for the free travel of the tickets, but when open causes the tickets to drop one by one into a chute provided below the drop.

In the drawings I show two selector drops 41 and 42 and two chutes 43 and 44 communicating therewith, respectively. Two are shown to represent a plurality that may be indefinitely multiplied in practice to such extent as the extension of the table 3 may permit.

The transverse dimensions of each chute are such as to accommodate a ticket of predetermined size so as to guide it with freedom of movement it its passage through the chute. Each chute communicates with one or more sorting boxes and preferably with a series thereof of indeterminate number arranged in vertical order of succession. In the drawings I show for each chute two sorting boxes which is a sufficient number to illustrate the principle involved.

The boxes communicating with the chute 43 are numbered 45 and 46. Those communicating with the chute 44 are numbered 47 and 48. The boxes are preferably interchangeable and are preferably of oblong transverse dimensions to accommodate snugly the size of the tickets they are designed to receive. Each box is provided with a spacing block 50 which is by preference simply a movable back stop against which the tickets are stacked and whose weight and friction against the walls of box afford sufficient yielding resistance to the addition of tickets one by one at the receiving or open end of the box to hold the tickets in compact order.

Each box is preferably provided at its open end with oppositely disposed clips 51 whose bevel faced heads 52 (see Fig. VI,) normally engage and hold the tickets 30 in the box.

The clips 51, operating normally to hold the tickets in place, are, while they are in place in the machine, held in disengaging position by the introduction between them of a ticket 30 before a push block 53 that is carried upon an open frame 55, see Fig. VI. The block 53 drives the ticket 30 between the opposing bevel faces of the heads 52 of the clips 51, and serves to force them apart, thus holding the tickets in place while the clips are thus disengaged. As often as the block 53 is withdrawn the clips immediately thereupon respond to engage and hold the tickets.

Each block 53 constitutes a movable section in its appropriate chute 43 or 44 as shown in Fig. IV and each is provided on its upper side with an inclined face 56 which defines a thin edge 57 along said upper side. Consequently if the block 53 be shifted transversely a distance equal to the transverse extent of the chute 43 the effect will be to close the chute and to present a deflection thereof into the front or receiving end of the sorting box to which the block so actuated belongs. In consequence of the foregoing a ticket dropping down the chute and meeting an obstructing block therein will be guided by its face 56 into its appropriate box, into which the said push-block 53 will drive it when it reassumes its normal position. The two positions of the push-block above described are illustrated in full and dotted lines, respectively, in the lowermost block shown in Fig. IV.

As the means for actuating the respective selector-drops and push blocks, I prefer to employ for each a solenoid as shown clearly in Figs. IV and V. There being no occasion to differentiate the illustration of a device so well known, I employ the numeral 60 to indicate a solenoid wherever shown and 60′ to indicate its spring projected movable core. The core is adapted in its movements to impart motion to the selector-drop 41 or 42 with which, in one instance it is connected through an open frame 55. The open structure of the frame 55 affords means for actuating a block 53 without offering obstruction of the chute in respect to such blocks as are not brought into requisition.

The solenoids of each group of selector-drop and sorting boxes are preferably adapted to be operated from a common keyboard 63. There being but four sorting boxes shown in the drawings the keyboard illustrated shows but four keys 64, 65, 66, and 67. Each key, as by the simple make and break device indicated in Fig. IX, is in electric circuit with the solenoid of one selector drop and one push block 53. A push upon a key selected serves to close the circuit of the se-

lected key with the effect of opening its drop and actuating its push block 53, and thereby transmitting a ticket to its proper sorting box. Consequently the number of keys on the selector keyboard is preferably equal to the number of blocks 53. I prefer to make the keyboards interchangeable upon a box 68, pins 69 being provided for separably mounting those members, and the keys being depressible to make contact between electric circuit terminals, whereof 70 indicates a common terminal. It is deemed to be unnecessary to illustrate the circuits into which the keys enter inasmuch as they are of the simplest character and need only to be mentioned in order to be intelligible to any electrician.

The operation of my machine may be described as follows:

Power from any suitable source, not illustrated, is applied to the pulley 12 to impart continuous rotation to it, and is by it, transmitted to impart constant motion to the belt 4 and reciprocatory motion to the ticket stripper 26.

During the operation of the machine the hopper is kept supplied with tickets 30 by substitution at required intervals of filled boxes 29 for the empty ones.

With each down stroke of the stripper 26 a single ticket is stripped off and discharged through the guide-way 36 into the space between the belt 4 and the front plate 9 through which it becomes visible and legible to the eye of the operator. A sufficient distance of travel is allowed after the ticket reaches the table between the studs 10 upon the belt which confine it to enable the operator to read the destination station upon it and after reading to depress the proper key of the selector keyboard. After selecting the right key the operator holds it down until the ticket enters the chute intended to receive it and is conveyed thereby to its proper sorting box whose selection is also effected by depression of the key which opens the chute. Release of the key causes the spring of the solenoid energized thereby to react so as to actuate its push-block 53 and thereby to file away the ticket in its sorting box, at the same time clearing the chute for the direction of another ticket. By this means a larger or smaller number of sorting boxes may be accommodated as required in the machine. The keys of the selector keyboard being easily removable, only so many need be mounted in it at one time as the number of sorting boxes in use may demand. Moreover the keys may be interchangeable and one having a certain indication upon its head may be substituted for another with a different indication displayed, as often as occasion may demand, but I prefer to use interchangeable keyboards in place of interchangeable keys inasmuch as it is easier and simpler upon occasion to shift the larger unit than to shift the individual keys in the keyboard. However, my invention contemplates either mode of manipulation as within its scope.

I prefer to provide an incandescent light bulb 61 in circuit with the various solenoids in order to indicate to the operator when the circuits are in working order, and from which indication he may, at any moment, learn when to interrupt the operation of the machine and set it in order.

What I claim is:

1. In a machine of the kind described, the combination with a display carrier and its driving mechanism, of means for supplying articles for distribution in a vertical position to the carrier, means for operatively confining such articles visibly against said carrier, and means for selectively distributing said articles from the carrier.

2. In a machine of the kind described, the combination with a table, a display carrier surmounting the same and disposed edgewise thereto, and carrier driving mechanism, of means for supplying articles for distribution in a vertical position to the carrier upon the table, means for operatively confining such articles visibly against said carrier, a selector-drop in the table, and means for controlling said drop at will.

3. In a machine of the kind described, the combination with a display carrier its driving mechanism means for supporting articles in operative vertical juxtaposition to the carrier, and means for confining such articles visibly against said carrier.

4. In a machine of the kind described, the combination with a table, an endless belt surmounting the same in edgewise disposition thereto, and driving mechanism, of means for operatively confining articles for distribution visibly against the belt upon the table, a selector-drop in the table, and means for controlling said drop at will.

5. In a machine of the kind described, the combination with a display carrier, its driving mechanism, means for supplying articles for distribution in a vertical position to the carrier, means for operatively confining such articles visibly against said carrier, and means for separating said articles one by one from the carrier, of a chute operatively communicating with said last named means to receive and convey away said articles, a plurality of receptacles in separate communication with said chute, and controllable means for directing articles through the chute to a selected receptacle.

6. In a machine of the kind described, the combination with a display carrier, its driving mechanism, means for supplying articles for distribution in a vertical position to the carrier, means for operatively confining such articles visibly against said carrier, and

means for separating said articles one by one from the carrier, of a chute operatively communicating with said last named means to receive and convey away said articles, a plurality of receptacles in separate communication with said chute, and controllable means for directing articles through the chute to a selected receptacle, said means last named comprising normally a movable section in the chute for each receptacle adapted in its movement to obstruct the chute and present a deflection to the receptacle.

7. In a machine of the kind described, the combination with a display carrier, its driving mechanism, means for operatively confining the articles to be distributed visibly against this carrier, and means for separating articles supplied to it, one by one, from the carrier, of a chute adapted to receive articles so separated, a plurality of receptacles for said articles communicating with said chute, and means for controlling delivery of said articles to any receptacle selected.

8. In a machine of the kind described, the combination with a display carrier, its driving mechanism, means for operatively confining the articles to be distributed visibly against this carrier, and means for separating articles supplied to it, one by one from the carrier, of a chute adapted to receive articles so separated, a plurality of receptacles communicating with said chute, and means for controlling delivery of said articles to any receptacle selected, said means consisting of a movable chute section for opening and closing each receptacle and a key-controlled, spring actuated solenoid, operatively connected with said chute section.

9. In a machine of the kind described, the combination with a display carrier, its driving mechanism, and means for operatively confining the articles to be distributed visibly against said carrier, of a plurality of chutes adapted to receive articles for distribution from the carrier, and means for controlling delivery of said articles one by one to any chute selected.

10. In a machine of the kind described, the combination with a display carrier, its driving mechanism, and means for operatively confining the articles to be distributed visibly against said carrier, of a plurality of chutes adapted to receive articles for distribution from the carrier, a plurality of receptacles for each chute communicating therewith, and means for controlling delivery of said articles one by one to any receptacle of any chute selected.

11. In a machine of the kind described, the combination with a display carrier, its driving mechanism, and means for operatively confining the articles to be distributed visibly against said carrier, of a plurality of chutes adapted to receive articles for distribution from the carrier, a plurality of receptacles for each chute communicating therewith, and means for controlling delivery of said articles one by one to any receptacle of any chute selected, said means being controlled by keys operatively mounted in a keyboard provided for them.

12. In a machine of the kind described, the combination with a display carrier, its driving mechanism, and means for operatively confining the articles to be distributed visibly against this carrier, of a plurality of chutes adapted to receive articles for distribution from the carrier, a plurality of receptacles for each chute communicating therewith, and means for controlling delivery of said articles one by one to any receptacle of any chute selected, said means being controlled by keys operatively and removably mounted in a keyboard provided for them.

13. In a machine of the kind described, the combination with a display carrier, its driving mechanism, means for operatively confining the articles to be distributed visibly against said carrier, and means for separating articles supplied to it, one by one, from the carrier, of a plurality of chutes adapted, respectively, to receive articles so separated, a plurality of receptacles for each chute, and means of article delivery control, one for each chute and each receptacle, collectively, belonging thereto.

In testimony whereof, I have hereunto set my hand in the presence of two subscribing witnesses.

ETHELBERT W. CHANDLER.

Witnesses:
JOHN B. CLELAND,
JOSEPH L. ATKINS.

Copies of this patent may be obtained for five cents each, by addressing the "Commissioner of Patents, Washington, D. C."