July 4, 1939. R. F. KREJCI ET AL 2,165,105

APPARATUS FOR MANUFACTURING FILAMENTS

Filed Aug. 18, 1937 3 Sheets-Sheet 1

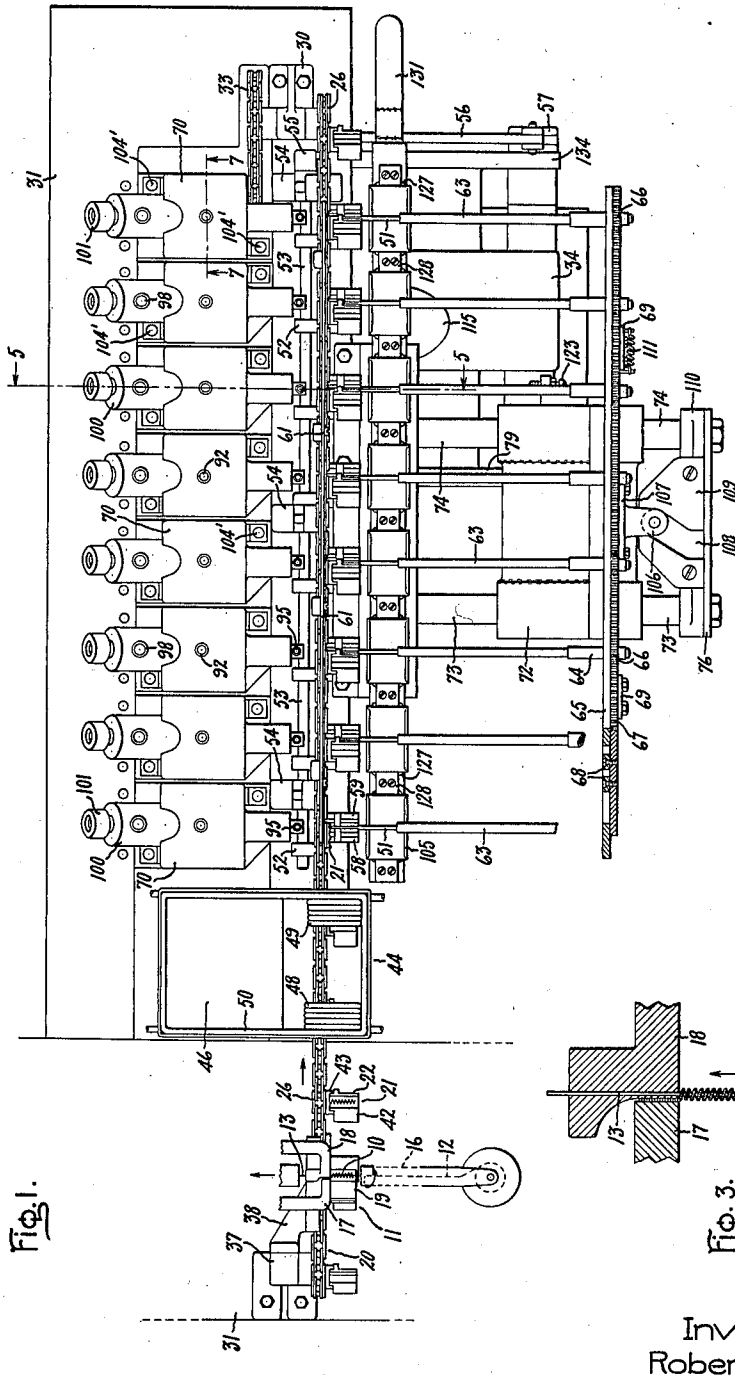

Fig. 1.

Fig. 3.

Inventors:
Robert F. Krejci,
William P. Zabel,
by Harry E. Burham
Their Attorney.

July 4, 1939. R. F. KREJCI ET AL 2,165,105

APPARATUS FOR MANUFACTURING FILAMENTS

Filed Aug. 18, 1937 3 Sheets-Sheet 2

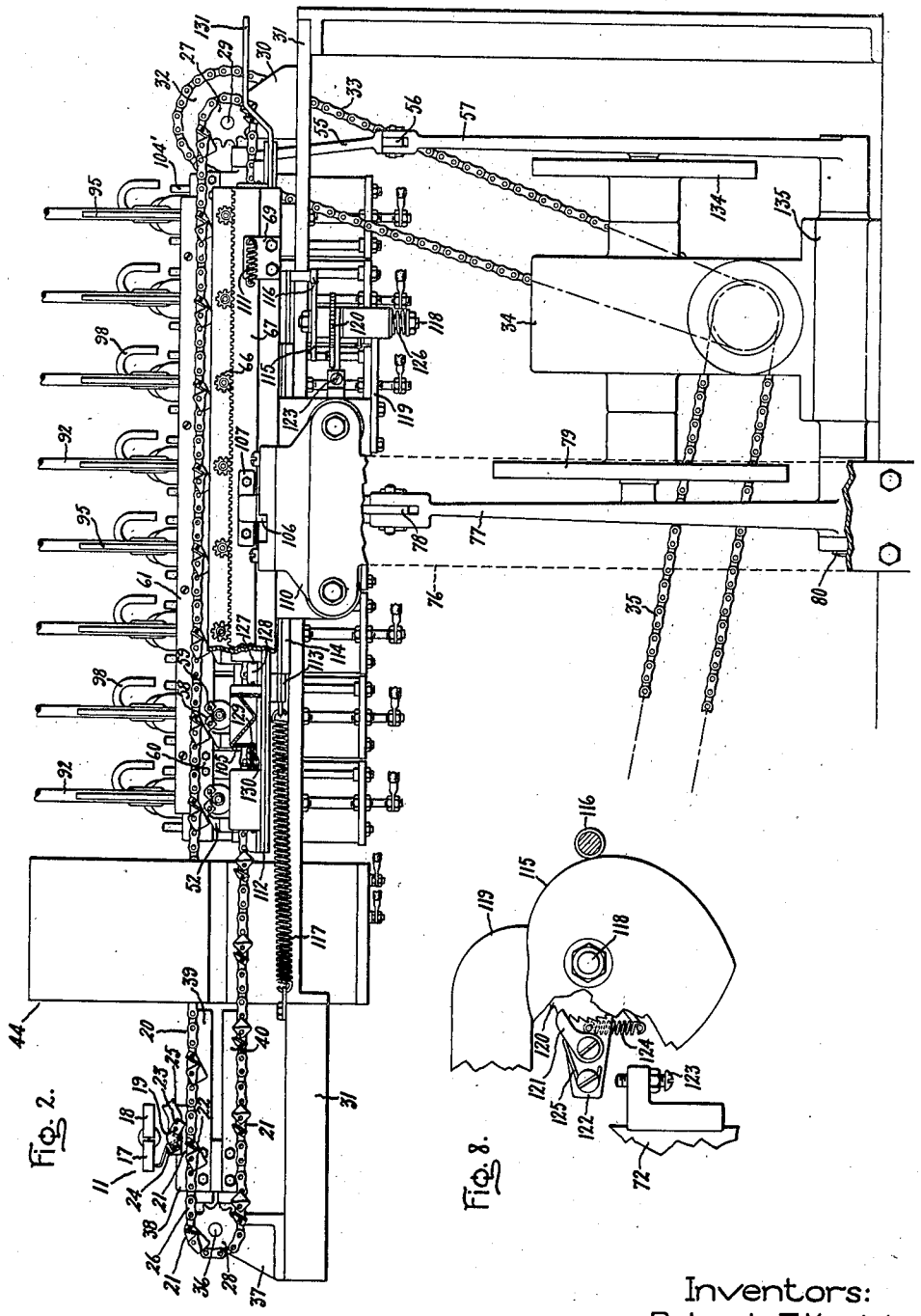

Fig. 2.

Fig. 8.

Inventors:
Robert F. Krejci,
William P. Zabel,
by Harry E. Dunham
Their Attorney.

July 4, 1939. R. F. KREJCI ET AL 2,165,105

APPARATUS FOR MANUFACTURING FILAMENTS

Filed Aug. 18, 1937 3 Sheets-Sheet 3

Fig. 5.

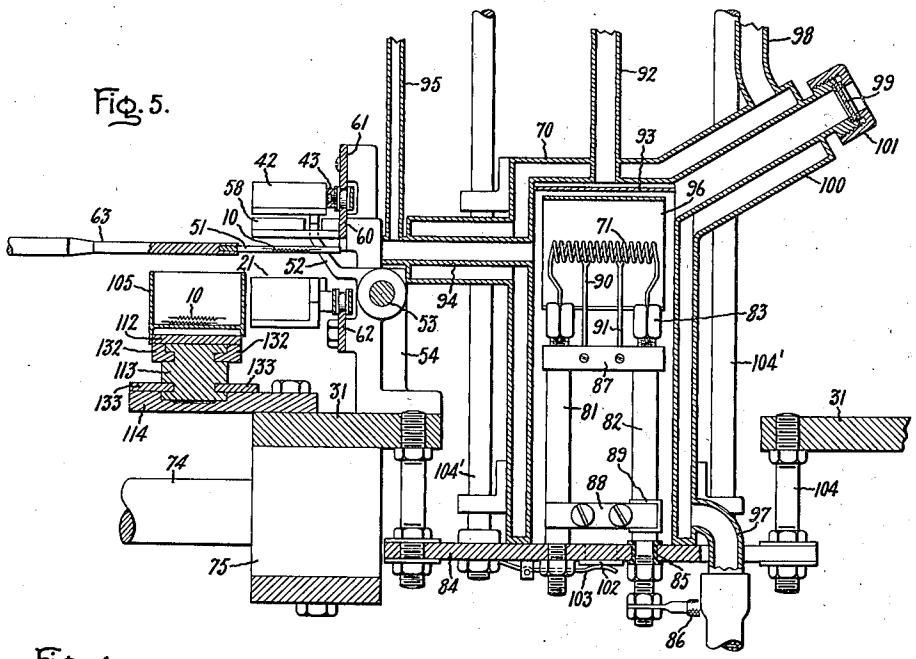

Fig. 4.

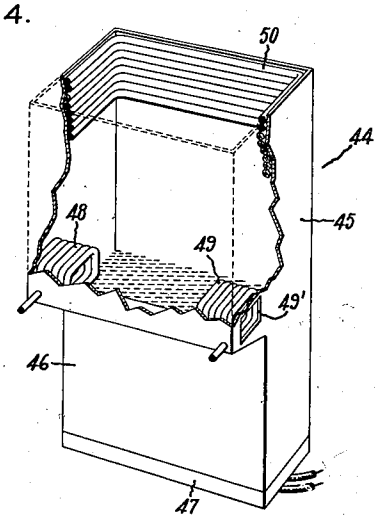

Fig. 7.

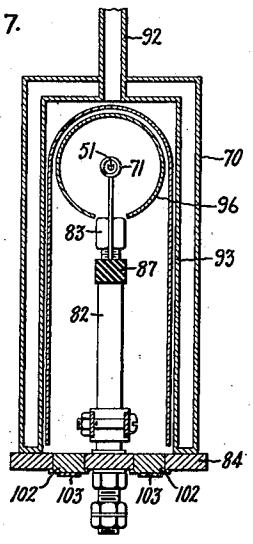

Fig. 6.

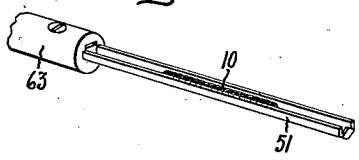

Inventors:
Robert F. Krejci,
William P. Zabel,
by Harry E. Dunham
Their Attorney.

Patented July 4, 1939

2,165,105

UNITED STATES PATENT OFFICE

2,165,105

APPARATUS FOR MANUFACTURING FILAMENTS

Robert F. Krejci and William P. Zabel, Cleveland Heights, Ohio, assignors to General Electric Company, a corporation of New York

Application August 18, 1937, Serial No. 159,727

5 Claims. (Cl. 176—4)

Our invention relates to apparatus for automatically coiling and heat treating fine wire used for filaments in incandescent lamps and the like and more particularly to automatic apparatus for coiling the filaments individually and heat treating them separately at rates of speed corresponding to the rate of coiling.

The present invention is an improvement upon the methods and apparatus for making filaments disclosed in applications Serial Nos. 132,763 and 133,854, William P. Zabel, one of the inventors herein, filed March 24 and 30, 1937, respectively. The present apparatus includes means for conveying the individual filaments after they have been coiled, preferably by apparatus of the type disclosed in Illingworth Patent 1,771,927, issued July 29, 1930, to heat treating apparatus similar to that shown in Zabel application Serial No. 133,854 hereinbefore referred to. According to our invention, a chain type conveyor having buckets thereon is provided for carrying the filaments away from the coiling apparatus at the same rate as they are produced, and a sufficient number of furnaces and associated apparatus are also provided to heat treat the filaments at the same rate as they are produced. Other features and advantages of our invention will be apparent from the description which follows and from the accompanying drawings of one species thereof.

In the drawings, Fig. 1 is a plan view of apparatus comprising our invention with the coiling apparatus only partially shown; Fig. 2 is a side elevation thereof; Fig. 3 is a horizontal section through a portion of the coiling apparatus while in the process of finishing a coiled-coil filament; Fig. 4 is a perspective view of the cleaning portion of our apparatus partially broken away to show the interior thereof; Fig. 5 is a vertical section at an enlarged scale along line 5—5 of Fig. 1 showing the principal parts of the heat treating portion of our apparatus; Fig. 6 is a perspectiv view at an enlarged scale of a boat for carrying a filament in and out of operative relation to the furnace; Fig. 7 is a vertical section of the furnace along line 7—7 of Fig. 1; and Fig. 8 is a plan view of ratchet mechanism for shifting the position of the filament receiving hoppers.

According to our invention, individual coiled-coil filaments 10 are produced at regular intervals by the coiling portion 11 of our apparatus which is only partially shown since it is essentially the same as the single head coiling apparatus shown in Illingworth Patent 1,733,881 of October 29, 1929. As shown in Figs. 1 and 3, the coiling operation consists in winding the continuous coil 12 of filament wire with its mandrel still in place on the temporary mandrel 13 which is withdrawn from the secondary coil after the portion constituting a filament 10 is severed from the remainder of the coil 12 by the knives 14 and 15. At the conclusion of this operation, an end of the filament coil 12 protrudes from the spindle 16, and the jaws 17 and 18 which have opened to release the preceding filament 10, advance and grip said end. A succeeding filament 10 is then coiled by the rotation of spindle 16 as both the jaws 17 and 18 and the temporary mandrel 13 are moved away therefrom. The rotation of the spindle 16 stops when the desired number of turns have been produced and the end of the temporary mandrel 13 is reached, but the jaws 17 and 18 and mandrel 13 continue to move until additional filament coil 12 is drawn out. This movement allows sufficient filament coil 12 to be left clear to form an uncoiled leg on the end of the filament 10 equal in length to that held by the jaws 17 and 18 and to form the forward end of the succeeding filament 10. After the knives 14 and 15 are operated, the temporary mandrel 13 again moves in the same direction longitudinally, withdrawing from the coils of the filament 10, and the jaws 17 and 18 separate, thereby releasing said filament 10.

The filament 10 falls clear of the coiling device and into the stationary bucket 19 mounted therebelow which holds it until the conveyor 20 moves a second bucket 21 into position below said stationary bucket 19. As the bucket 21 moves into position, the forward portion 22 thereof strikes the weighted portion 23 of the stationary bucket 19 causing it to turn and move away from the other half 24 thereof, and allows the filament 10 to fall through the opening therebetween. The bucket 19 is V-shaped with one half 24 fastened directly to the supporting arm 25 and the half 23 pivoted thereon and weighted so as to normally swing against the other half 24. The conveyor 20 includes a number of buckets 21 which are mounted at regular intervals on the chain 26. The chain 26 moves at a uniform rate in the direction indicated by the arrow and passes around the sprockets 27 and 28 at opposite ends of the machine. Sprocket 27 does the driving, being fastened to the shaft 29 which is supported by the bracket 30 extending from the table 31 and which is driven by the sprocket 32. The sprocket 32 is driven by the chain 33 which engages a sprocket on the driven shaft of the speed reducer 34 which in turn is driven by the coiling device by the chain 35. Sprocket 28 is an idler and is pivoted on the pin 36 held by the bracket

37 which is mounted on the table 31 and which guides the conveyor chain 26 adjacent said sprocket 28 on the coiling device 11 through the arm 38 and bars 39 and 40 attached thereto. The conveyor buckets 21 each consist of two sections 22 and 42 which are attached to the chain 26 by means of block 43 and which form the sides of a V in which the filament 10 is carried.

Movement of the conveyor 20 in the direction indicated carries the buckets 21 and the filaments 10 therein through the cleaning portion 44 of our apparatus which washes these parts with carbon tetrachloride vapors which dissolve and wash the oil, etc., therefrom. The cleaning portion 44 of our apparatus is shown in detail in Fig. 4 and comprises a container 45 having a well 46 for holding liquid carbon tetrachloride, and an electric heating element 47 attached to the bottom thereof for raising the temperature of the liquid so that the remainder of the container 45 is filled with the vapors thereof. The buckets 21 and chain 26 pass into the container 45 through an opening in one side, through the cooling coils 48 which condense the vapors attempting to pass out through the said opening, through the vapor in the container which passes down around the filament and between the coils thereof to thoroughly wash it, and then through the cooling coil 49 and an opening 49' in the other side of the container, the said coil 49 serving to condense the vapors about the filament and boat and cause them to drain off. In this case, the cooling coils 48 and 49 are formed from one piece of tubing which is soldered to the container where it passes therethrough, and the cooling fluid, preferably tap water, flows through the coil 49 at the right, then through coil 48 to the drain. A third cooling coil 50 is located at the open top of the container 45, as shown, to prevent the vapors from passing out said top.

From the cleaning portion 44 of our apparatus, the buckets 21 pass to the heat treating portion thereof which treats the filaments 10 in the manner disclosed in the Zabel dockets hereinbefore referred to. This portion of our apparatus is comprised of a plurality of duplicate sections in order to handle the full production of the coiling section 11 although the heat treatment is for a relatively short time (about five seconds). In this instance, there are eight such sections located so as to be in alignment with eight consecutive buckets 21 of the conveyor 20 and, as each succeeding series of buckets 21 passes into position before these sections, the halves 22 and 42 of said buckets 21 are separated to allow the filaments 10 to fall into the boats 51 therebelow. The half 42 of each of the buckets 21 is pivoted on the block 43 and normally is held against the other half 22 by the greater weight of the outer portion thereof, but when the filament 10 is released the end of a finger 52 is raised to strike the pivoted half 42 and swing it away from engagement with the other half 22. All eight fingers 52 are mounted on the rod 53 which is supported by three equidistantly spaced brackets 54 extending upward from the table 31 and which is turned, so as to move the fingers 52, by the arm 55. Arm 55, as shown in Fig. 2, is connected through the link 56 to lever 57 which is actuated by the cam 134 which it engages through a laterally extending roller (not shown). The cam 134 is mounted on the reduced speed shaft of the speed reducer 34 which in turn is mounted on the block 135 on which the lever 57 is also pivotally mounted.

Each of the filaments 10 released by the conveyor buckets 21 is guided into place in the boat 51 by the inclined surfaces of a pair of blocks 58 and 59 (Fig. 2) which are mounted on the bar 60. The bar 60 supports the section of the conveyor chain 26 adjacent the unloading positions thereof and is one of three such bars 60, 61 and 62 which are mounted on the brackets 54 and which guide the conveyor chain 26 in this area.

The boats 51 receiving the filaments 10 are, as shown in Fig. 6, of exceedingly small mass, being formed in this case from tungsten ribbon about .003 inch in thickness. The boats 51 conform to the requirements of the apparatus and method disclosed in the Zabel applications hereinbefore referred to and each is mounted on the end of a rod 63 which is held by the bearing 64 attached to bar 65. Each boat 51 is held upright by a gear 66 which is fastened to the end of the rod 63 and meshes with the rack 67 which is mounted on the side of bar 65 by means of the rollers 68 (Fig. 1). The rollers 68 shown are some of a plurality which ride in slots in bar 65 and support the rack 67 while the blocks 69, which are attached to said bar 65, hold it against said rack.

Once the filaments 10 are located in the boats 51, said boats are advanced into the furnaces 70 and into the heating coils 71 by movement of the bar 65 and the carriage 72 on which said bar 65 is mounted. The carriage 72 slides on rods 73 and 74 which are mounted at one end in the block 75 on the lower surface of the table 31 and at the other end in the arm 76 extending from the lower portion of said table 31 and is moved by lever 77 to which it is connected by the link 78. The lever 77 is actuated by the box cam 79 on the reduced speed shaft of speed reducer 34 which it engages through a roller (not shown) and turns about the shaft 80 extending from block 135. The heating coil 71 within each of the furnaces 70, as shown in Fig. 5, is supported by the posts 81 and 82 which are split to accommodate the ends of said coil and are clamped thereto by the nuts 83 screwed thereon. Post 81 is fastened to the plate 84 which is connected to the grounded side of the source of electricity for heating the coil 71 whereas post 82 is mounted on said plate 84 through the insulating bushings and washers 85 and is connected through conductor 86 to the other side of said source. Additional support is furnished the posts 81 and 82 by the insulating block 87 and by the straps 88 which engage post 81 directly and the post 82 through insulating block 89. Additional support is also furnished the heating coil 71 to keep the turns in alignment with each other by the wires 90 and 91 which extend upward from the insulating block 87 and are notched to engage the wire of the heating coil 71. The heat treatment takes place in a non-oxidizing atmosphere (in this case, hydrogen) which is introduced into the furnace 70 through pipe 92 and flows down around the outside of the deflector 93 (Fig. 7) to the bottom edge thereof and then into the furnace proper which causes it to be preheated and to wash the furnace 70 free of the heavier atmosphere. A steady flow of the non-oxidizing gas is introduced into the furnace 70 to prevent any displacement and consequent contamination of any of the gas therein due to leakage about the bottom of the furnace 70 and through the aperture therein through which the boat 51 is introduced. With this man-

ter of operation, some gas is forced out of the furnace 70 through the chamber 94 thereof and is conducted upward through the pipe 95 attached thereto which eliminates the possibility of flame at the outer opening of the chamber 94. The gas within the furnace 70 is agitated very little by the passage of the boat 51 in and out of the furnace 70. Probably very little, if any, of the outer atmosphere is carried into the furnace 70 therewith and the nonoxidizing gas always fills all except the very edge of the chamber 94. A metal reflector 96 is mounted about the heating coil 71 by suitable means (not shown) to redirect some of the radiated heat back onto said coil 71 and the boat 51 and filament 10. The complete furnace 70 is cooled by a flow of water between the double walls thereof. The cooling water is introduced into the furnace walls through the pipe 97 and flows out the bent end of the pipe 98 (Fig. 2).

The temperature of the heat treatment is set by adjustment of the current applied to the heating coil 71 in accordance with the readings shown by an optical pyrometer sighted through the window 99 in the tubular extension 100 of the furnace 70. The window 99 is made from a heat resisting glass and is held in place by the cap 101 screwed to the extension 100. Because of the explosiveness of a mixture of hydrogen and air, the furnace 70 is not clamped to the plate 84 but is allowed to rest thereon and two openings are made in the plate 84 which are closed off by the plugs 102. In case of an explosion within the furnace 70, the spring fingers 103 permit the plugs 102 to be pushed from the holes in the plate 84 so that the pressure within the furnace is reduced without damage to any of the parts. Each of the plates 84 supporting the furnaces 70 is hung in the opening in the table 31 on the bolts 104 and supports a pair of rods 104' at diagonal corners of the furnace 70 which guides it when it is raised from the plate 84.

The boats 51 are kept within the heating coil 70 for the heating period of the treatment which is very short because of the small mass of the parts to be heated and the high temperature thereof, and are then retracted slightly to the furnace chamber 94 where they remain for an interval to cool. From the furnace chamber 94 the boats 51 are moved back to a position over the hoppers 105 and are turned over so that the filaments 10 therein fall into said hoppers. The turning-over movement of the boats 51 is produced by the latter portion of the withdrawing movement as the rack 67 is then moved sideward by the passage of the roller 106 on the bracket 107 attached thereto into the diagonal slot 108 in the cam 109, thereby rotating the gears 66 on the rods 63 which carry said boats 51. The cam 109 is stationary and is mounted on the bracket 110 fastened to rods 73 and 74. Normally the rack 67 holds the boats 51 upright as it is held in that position by the spring 111 which extends between a post in said rack 67 and the block 69. The return movement of the boats 51 turns them over into position to receive succeeding filaments 10.

The hoppers 105 receiving the filaments 10 rest upon the bar 112 (Figs. 2 and 5) which in turn is mounted on the slide 113 located in the ways in plate 114 and are moved back and forth sideward automatically to cause the filaments 10 to pile up more evenly therein. The sideward movement of the hoppers 105 is produced by movement of a slide 113 created by the rotation of a different section of the cam 115 (Figs. 2 and 8) into position behind roller 116 on the post extending therefrom. The spring 117 which extends between the other end of said slide 113 and the table 31 pulls the slide 113 so that the roller 116 follows the cam surface. The cam 115, as shown in Figs. 1 and 8, is attached to the shaft 118 extending through the bracket 119 and is turned by the ratchet wheel 120 which is also attached to said shaft 118. The ratchet wheel 120 is turned by the pawl 121 mounted on the arm 122 which is struck by the end of the screw 123 attached to the carriage 72 during the forward movement thereof. The arm 122 is pivoted on the shaft 118 and is returned to its former position after the carriage 72 moves back by the spring 124 which extends between posts in said arm 122 and the bracket 119. The pawl 121 is kept against the ratchet 120 by the spring 125. The cam 115 is held in place during the return movement of the pawl 121 by the friction produced by the spring 126 over the lower end of shaft 118.

The filaments 10 are unloaded manually either by removing hoppers 105 individually from the apparatus or by removing the bar 112 with each of the hoppers 105 still in place. The hoppers 105 rest directly on the bar 112 and are held in place by protruding ridges 127 (Fig. 2) in both sides thereof which fit into correspondingly shaped grooves in the blocks 128 on said bar 112 and by the ball 129 backed by the spring 130 which enters a depression at the mid point in the hoppers 105. To remove the hoppers 105 separately, they are merely slid sideward from between the blocks 128, whereas if all of the hoppers 105 are removed at once, the bar 112 is slid longitudinally on the slide 113, through manual engagement with the handle 131, until both plates 132 (Fig. 5) on the bar 112 are removed from the side grooves in the slide 113. The slide 113 is retained in the ways in plate 114 by the plates 133 attached thereto which enter side grooves in said slide 113.

What we claim as new and desire to secure by Letters Patent of the United States is:

1. In a device of the class described, the combination of means for successively coiling portions of a filament wire and severing the coiled portions to form individual filaments, heat treating means for said filaments mounted adjacent to said coiling means, a conveyor for carrying said filaments separately from said coiling means to a position before said heat treating means comprising an endless belt, two-piece buckets mounted thereon at spaced intervals and having one half fastened directly to said belt and the other half pivoted thereon and weighted at one side so that it normally engages the first half and forms therewith a V trough in which the said filaments are carried, means for tipping the pivoted half of the conveyor buckets when they reach a position before the heat treating means to allow the filaments to drop therefrom and means for receiving said filaments and for carrying them into and out of operative relation to said heat treating means.

2. In a device of the class described, the combination of means for successively coiling portions of a filament wire and severing the coiled portions to form individual filaments, a stationary bucket mounted below said coiling means adapted to receive the filaments released thereby, an endless chain having buckets at spaced intervals thereon and adapted to carry said buckets below

the said stationary bucket to receive filaments discharged therefrom, a plurality of furnaces having heating means therein located adjacent to the path of movement of said chain, a plurality of boats located before said furnaces and below the path of movement of the buckets on said chain for receiving the filaments discharged therefrom and means for moving said boats to carry the filaments separately into and out of the furnaces to cause said filaments to be heat treated.

3. In a device of the class described, the combination of means for successively coiling portions of a filament wire and severing the coiled portions to form individual filaments, a stationary bucket mounted below said coiling means adapted to receive the filaments released thereby, an endless chain having buckets at spaced intervals thereon and adapted to carry said buckets below the said stationary bucket to receive filaments discharged therefrom, a plurality of furnaces mounted adjacent to the path of travel of said endless chain, each of said furnaces having a resistance coil mounted therein, means for introducing a non-oxidizing gas into said furnaces, a deflector therein for directing the incoming gas downward along the walls thereof and into the interior of the furnace at the bottom, a chamber extending from each of said furnaces in alignment with the resistance coil therein, a plurality of boats located before the furnaces and in position to receive the filaments discharged from the conveyor buckets thereat and means moving said boats through the furnace chambers into the resistance coils therein for a definite interval to cause the filaments therein to be heated and then retracting said boats into the chambers for an interval to allow them to cool and finally withdrawing them from the furnaces.

4. In a device of the class described for treating individual coiled filaments, the combination of a container for cleaning fluid having openings in opposite sides thereof, a heater located adjacent to said container for raising the temperature of the cleaning fluid therein to cause it to be vaporized into the upper portion thereof, means for preventing the vapor from passing from said openings in said container, heat treating means mounted adjacent to said container and means for conveying said individual filaments into said container to cause the filaments to be cleaned by the vapor therein and then into operative relation to said heat treating means.

5. In a device of the class described for treating individual coiled filaments, the combination of a container for cleaning fluid having openings in opposite sides thereof, a heater located adjacent to said container for raising the temperature of the cleaning fluid therein to cause it to be vaporized into the upper portion thereof, a cooling coil disposed within said container adjacent to each of said openings therein for preventing the vapor from passing from said openings, heat treating means mounted adjacent to said container and means for conveying said individual filaments into said container to cause the filaments to be cleaned by the vapor therein and then into operative relation to said heat treating means.

ROBERT F. KREJCI.
WILLIAM P. ZABEL.