US 20090093312A1

(19) **United States**

(12) **Patent Application Publication**

(10) **Pub. No.: US 2009/0093312 A1**

(43) **Pub. Date: Apr. 9, 2009**

Carlson

(54) **SYSTEM AND METHOD FOR CONNECTING GAMING DEVICES TO A NETWORK FOR REMOTE PLAY**

(75) Inventor: **Rolf E. Carlson**, Albuquerque, NM (US)

Correspondence Address:
KNOBBE MARTENS OLSON & BEAR LLP
2040 MAIN STREET, FOURTEENTH FLOOR
IRVINE, CA 92614 (US)

(73) Assignee: **Legal iGaming, Inc.**, Las Vegas, NV (US)

(21) Appl. No.: **12/331,332**

(22) Filed: **Dec. 9, 2008**

Related U.S. Application Data

(60) Division of application No. 10/913,301, filed on Aug. 5, 2004, which is a continuation of application No. 10/682,095, filed on Oct. 8, 2003, now abandoned, said application No. 10/913,301 is a continuation-in-part of application No. 09/698,507, filed on Oct. 26, 2000, now Pat. No. 7,260,834.

(60) Provisional application No. 60/417,913, filed on Oct. 9, 2002, provisional application No. 60/161,591, filed on Oct. 26, 1999.

Publication Classification

(51) **Int. Cl.**
A63F 9/24 (2006.01)
A63F 13/00 (2006.01)

(52) **U.S. Cl.** **463/42**

(57) **ABSTRACT**

A system and method for connecting remote player devices to regulated host gaming devices in a network to provide remote game play. A host gaming device is configured to provide game information to a plurality of remote player devices to allow remote play of the host game device. Whether each remote player device is permitted to receive gaming data is based upon, at least in part, the geographic location of the remote player device.

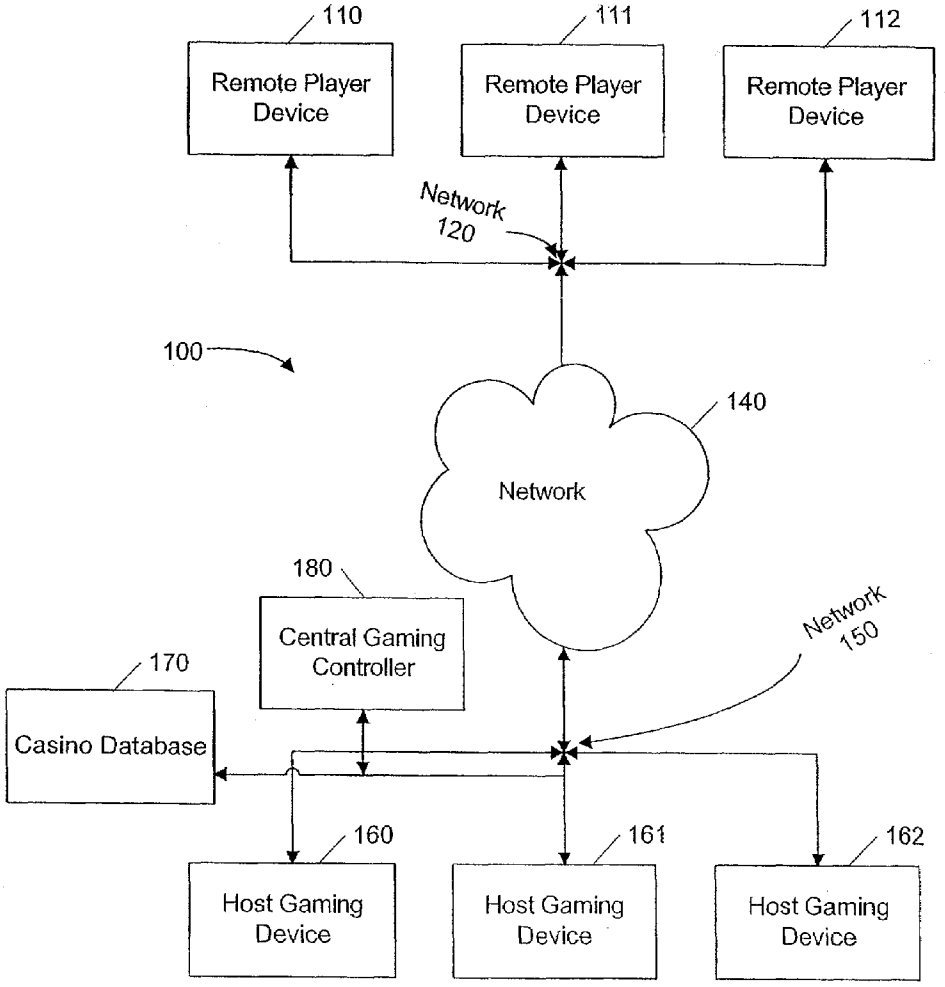

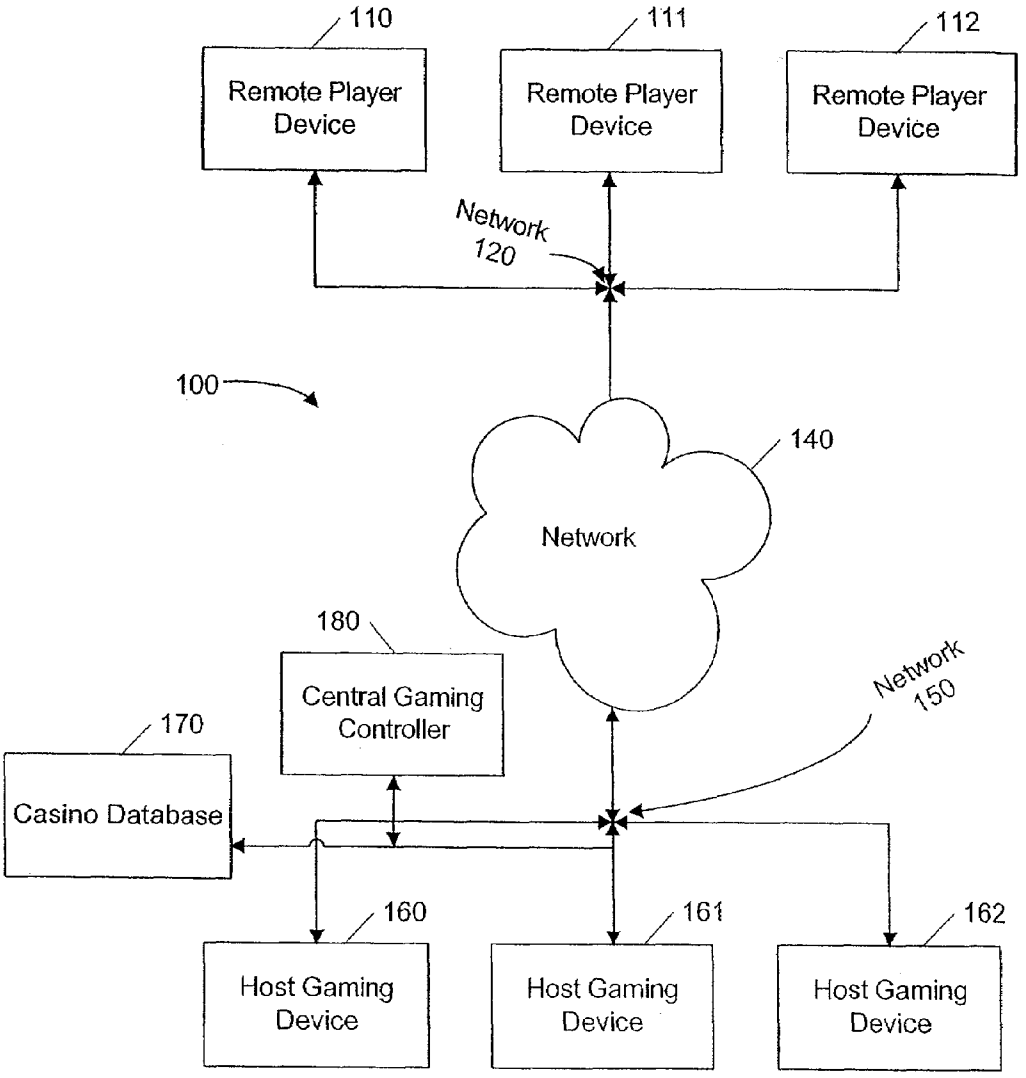
110
Remote Player Device
111
Remote Player Device
112
Remote Player Device
Network 120
100
140
Network
180
Central Gaming Controller
Network 150
170
Casino Database
160
Host Gaming Device
161
Host Gaming Device
162
Host Gaming Device

FIG. 1

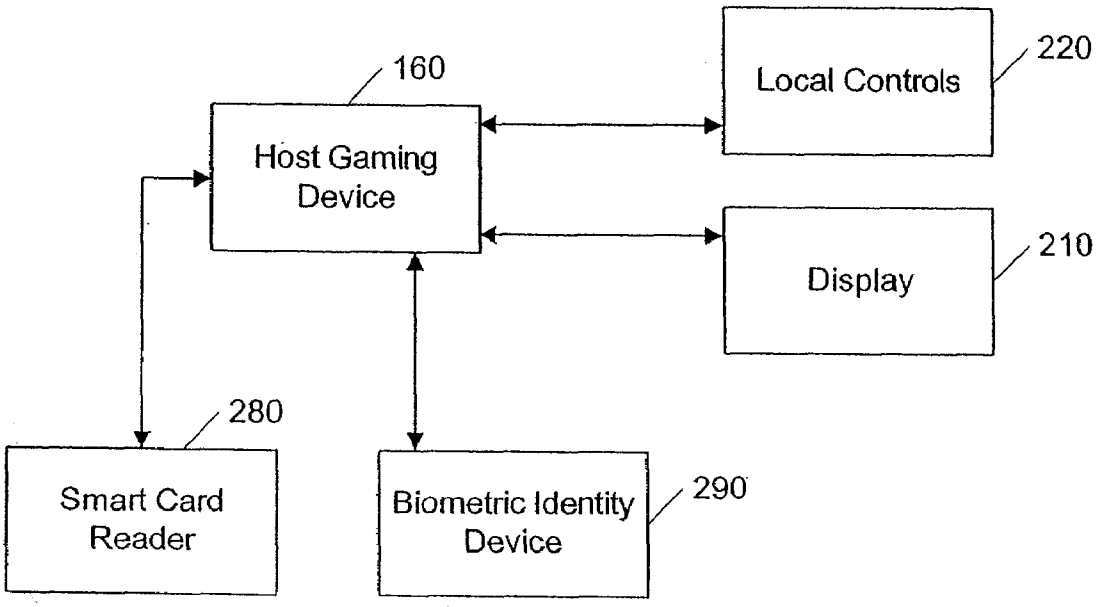
160
Host Gaming Device
Local Controls
220
Display
210
280
Smart Card Reader
Biometric Identity Device
290

FIG. 2

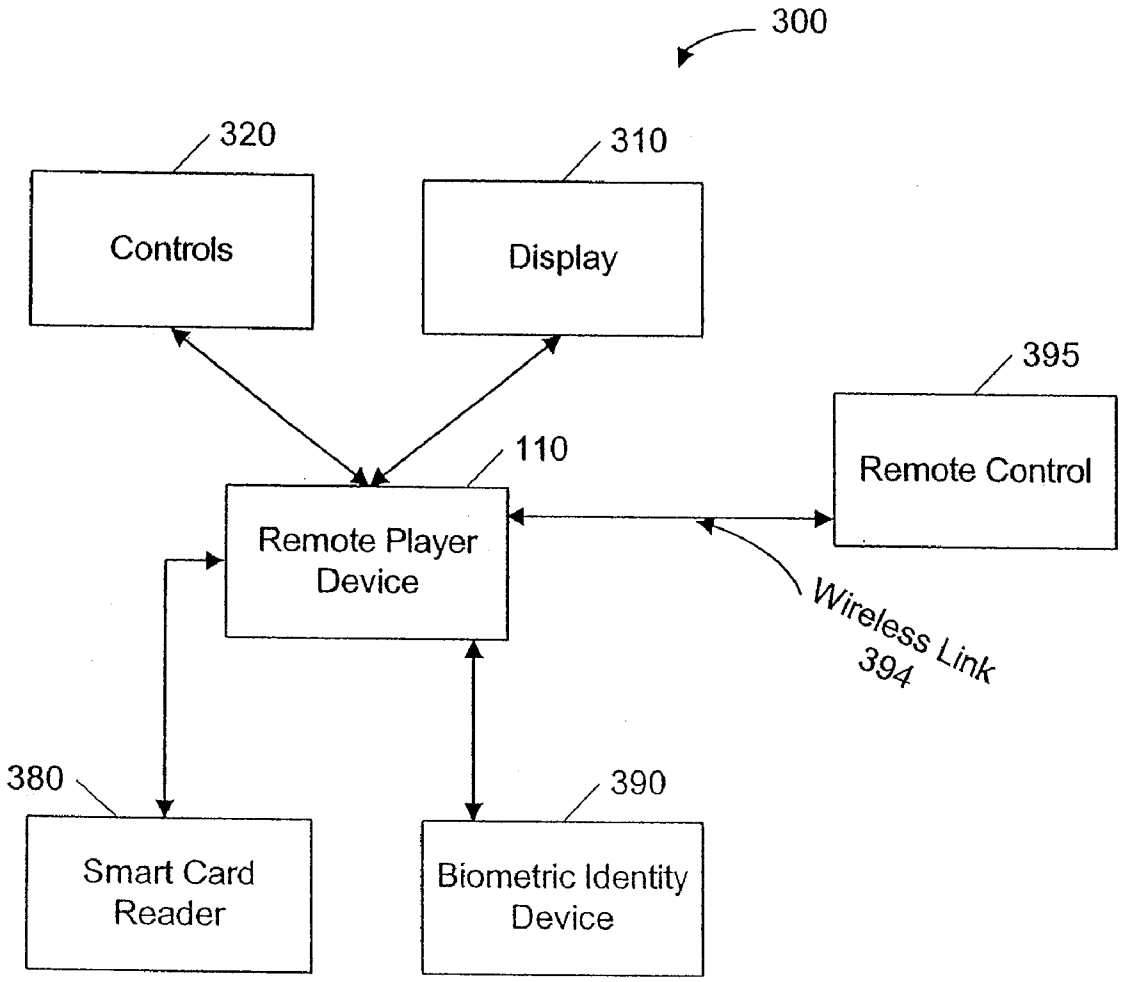
300
320
Controls
310
Display
395
Remote Control
110
Remote Player Device
Wireless Link 394
380
Smart Card Reader
390
Biometric Identity Device

FIG. 3

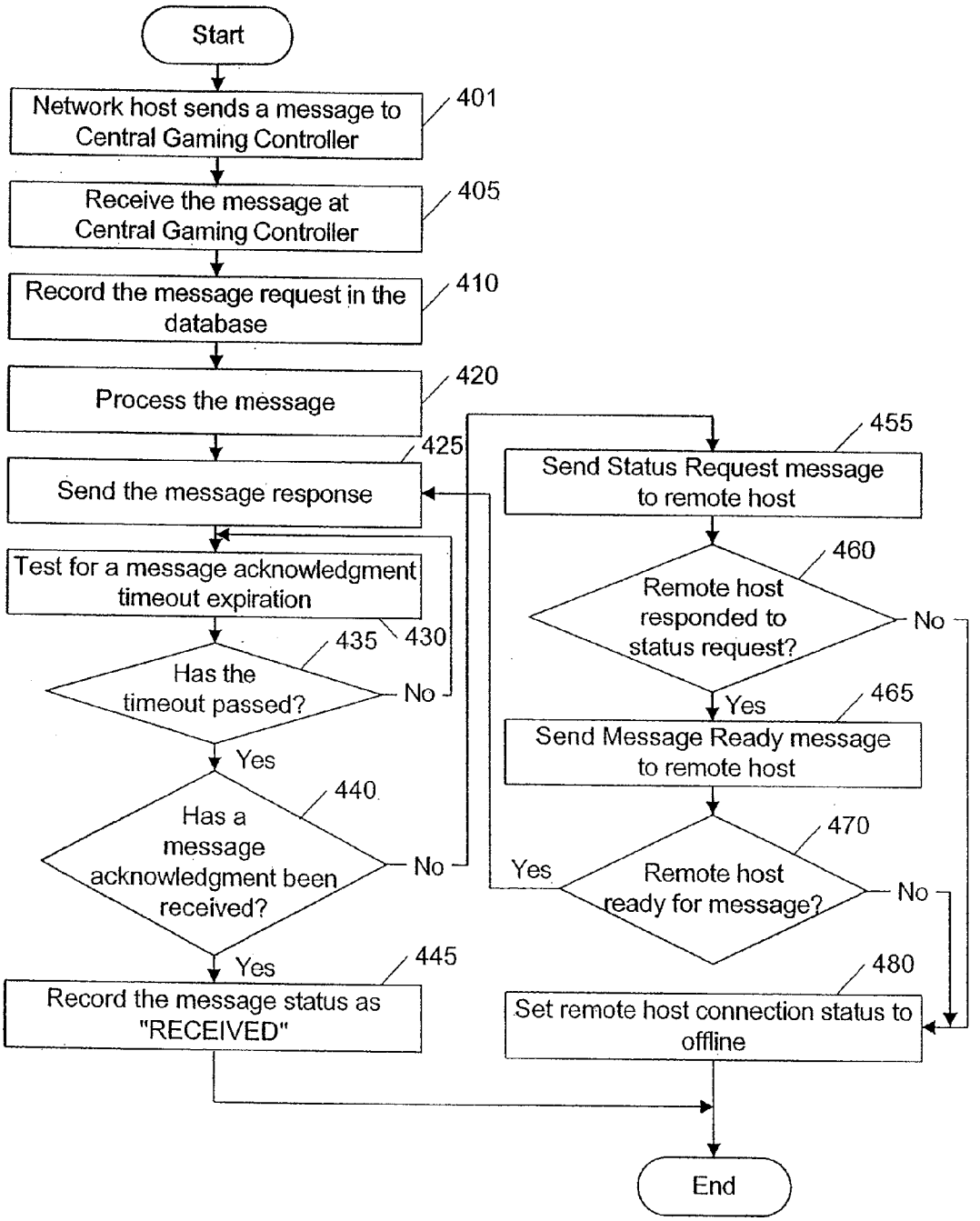
Start
Network host sends a message to Central Gaming Controller
401
Receive the message at Central Gaming Controller
405
Record the message request in the database
410
Process the message
420
Send the message response
425
Test for a message acknowledgment timeout expiration
430
Has the timeout passed?
435
No
Yes
Has a message acknowledgment been received?
440
No
Yes
Record the message status as "RECEIVED"
445
Send Status Request message to remote host
455
Remote host responded to status request?
460
No
Yes
Send Message Ready message to remote host
465
Remote host ready for message?
470
Yes
No
Set remote host connection status to offline
480
End

FIG. 4

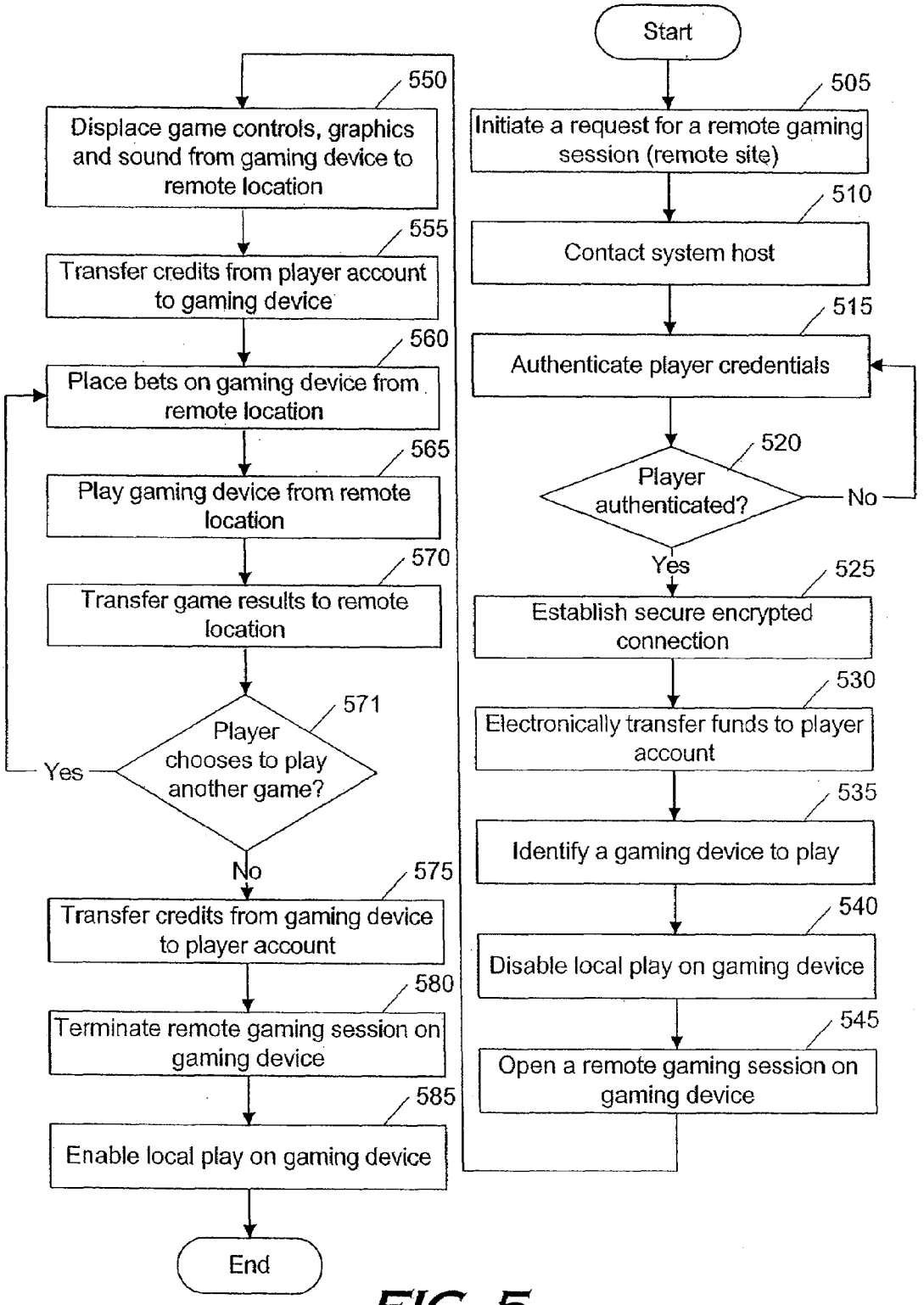
Start
505
Initiate a request for a remote gaming session (remote site)
510
Contact system host
515
Authenticate player credentials
520
Player authenticated?
No
Yes
525
Establish secure encrypted connection
530
Electronically transfer funds to player account
535
Identify a gaming device to play
540
Disable local play on gaming device
545
Open a remote gaming session on gaming device
550
Displace game controls, graphics and sound from gaming device to remote location
555
Transfer credits from player account to gaming device
560
Place bets on gaming device from remote location
565
Play gaming device from remote location
570
Transfer game results to remote location
571
Player chooses to play another game?
Yes
No
575
Transfer credits from gaming device to player account
580
Terminate remote gaming session on gaming device
585
Enable local play on gaming device
End

FIG. 5

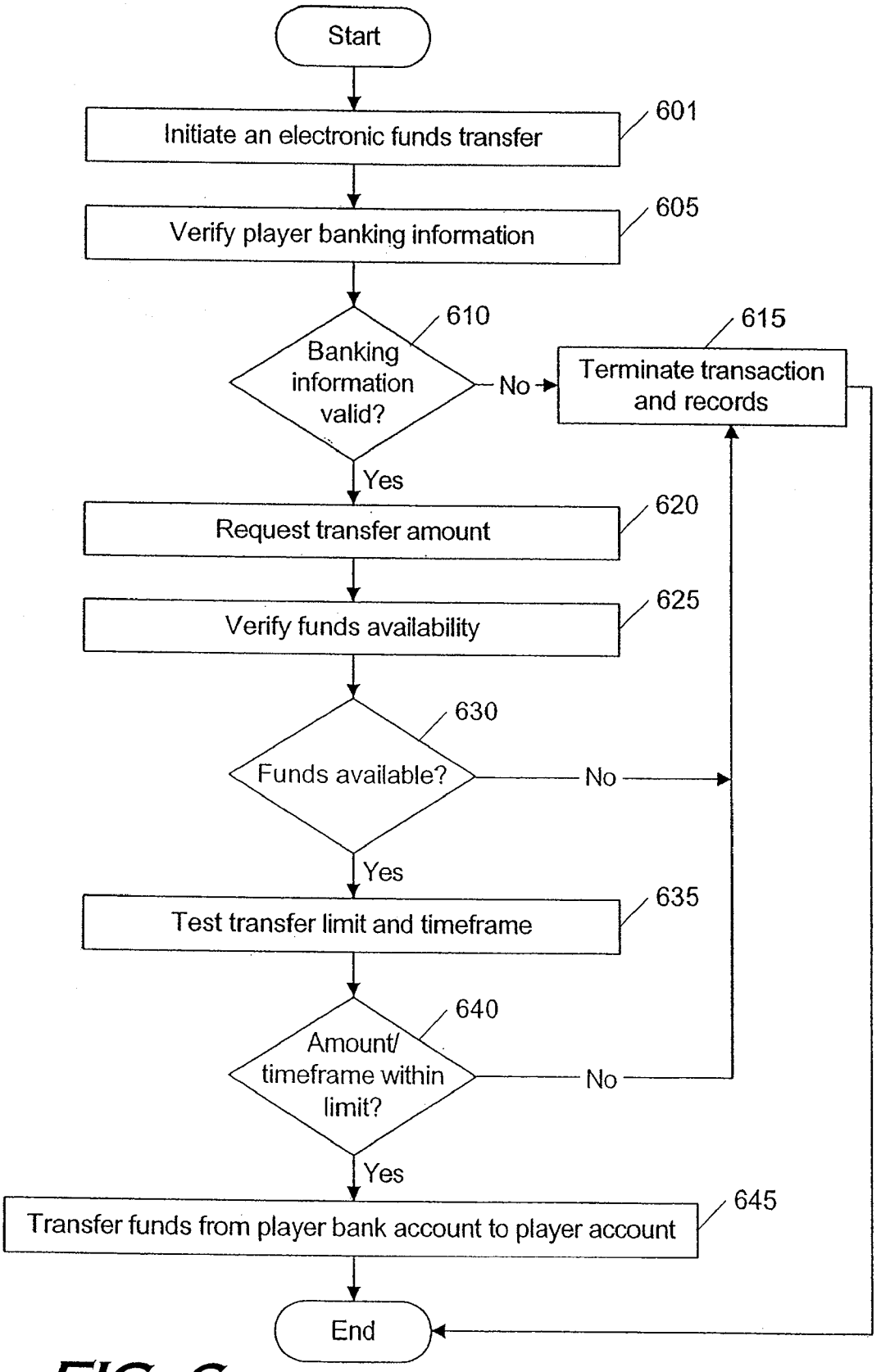
Start
Initiate an electronic funds transfer
601
Verify player banking information
605
Banking information valid?
610
No
Terminate transaction and records
615
Yes
Request transfer amount
620
Verify funds availability
625
Funds available?
630
No
Yes
Test transfer limit and timeframe
635
Amount/ timeframe within limit?
640
No
Yes
Transfer funds from player bank account to player account
645
End

FIG. 6

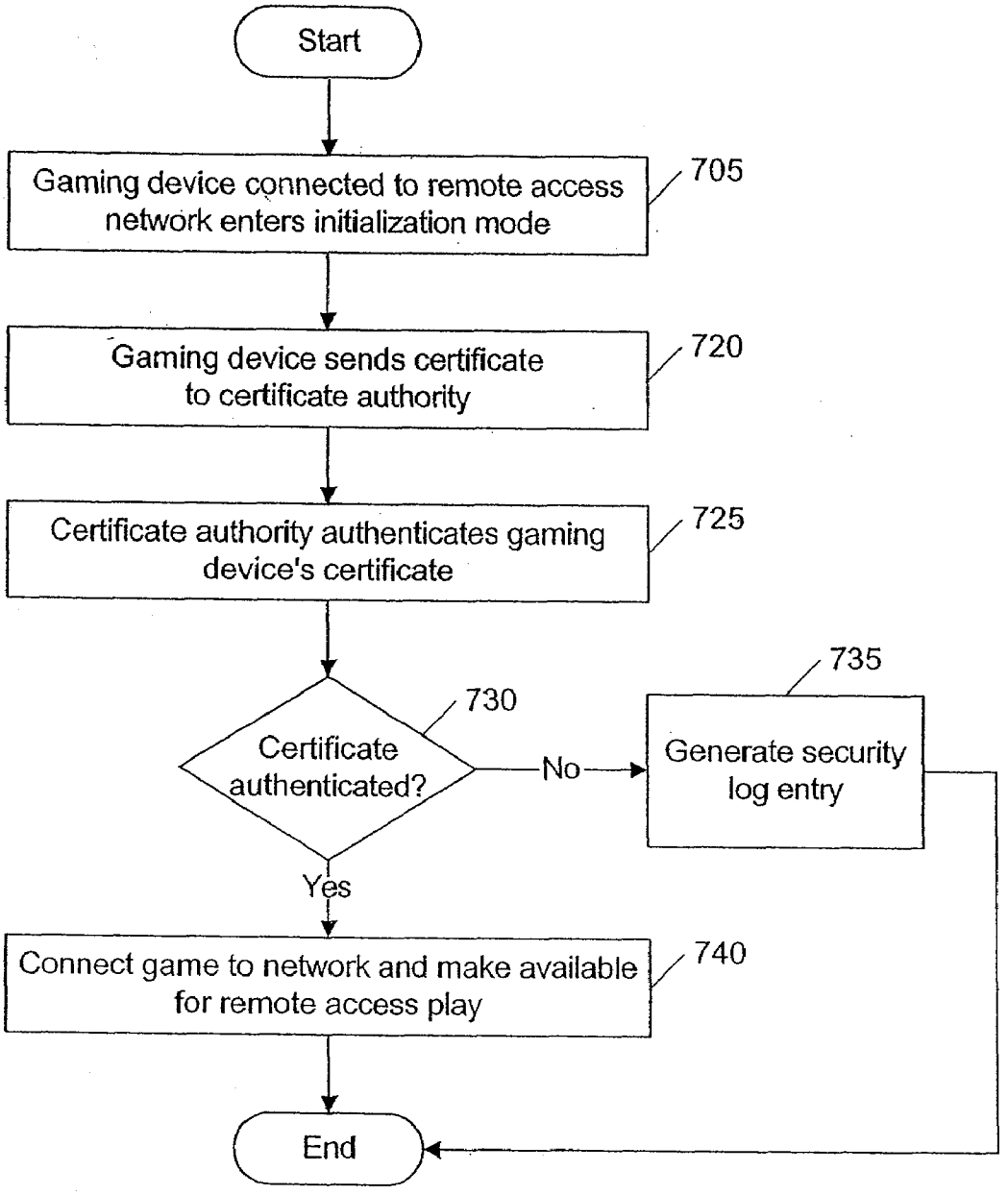
Start
Gaming device connected to remote access network enters initialization mode
705
Gaming device sends certificate to certificate authority
720
Certificate authority authenticates gaming device's certificate
725
Certificate authenticated?
730
No
Generate security log entry
735
Yes
Connect game to network and make available for remote access play
740
End

FIG. 7

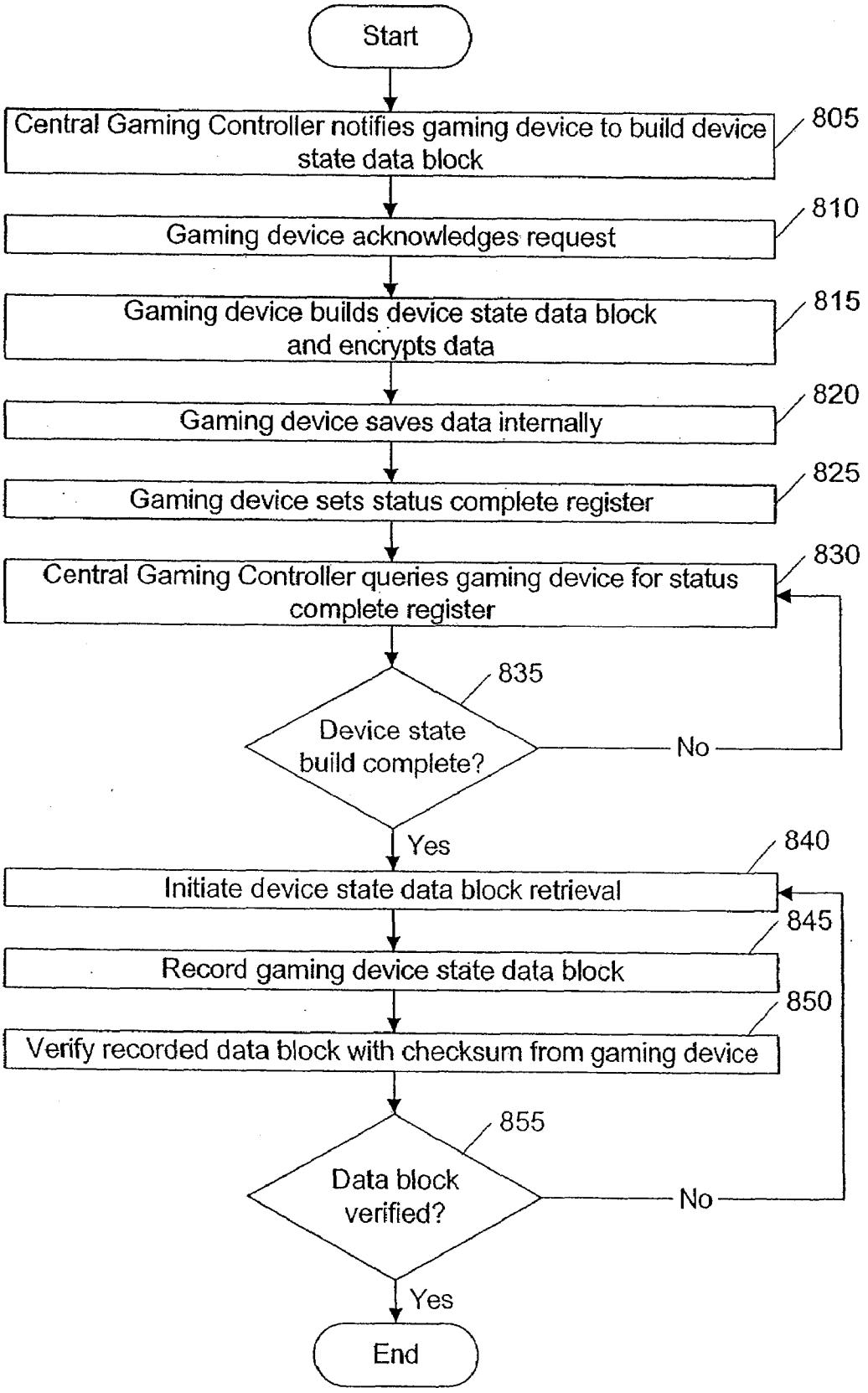
Start
Central Gaming Controller notifies gaming device to build device state data block
805
Gaming device acknowledges request
810
Gaming device builds device state data block and encrypts data
815
Gaming device saves data internally
820
Gaming device sets status complete register
825
Central Gaming Controller queries gaming device for status complete register
830
835
Device state build complete?
No
Yes
840
Initiate device state data block retrieval
845
Record gaming device state data block
850
Verify recorded data block with checksum from gaming device
855
Data block verified?
No
Yes
End

FIG. 8

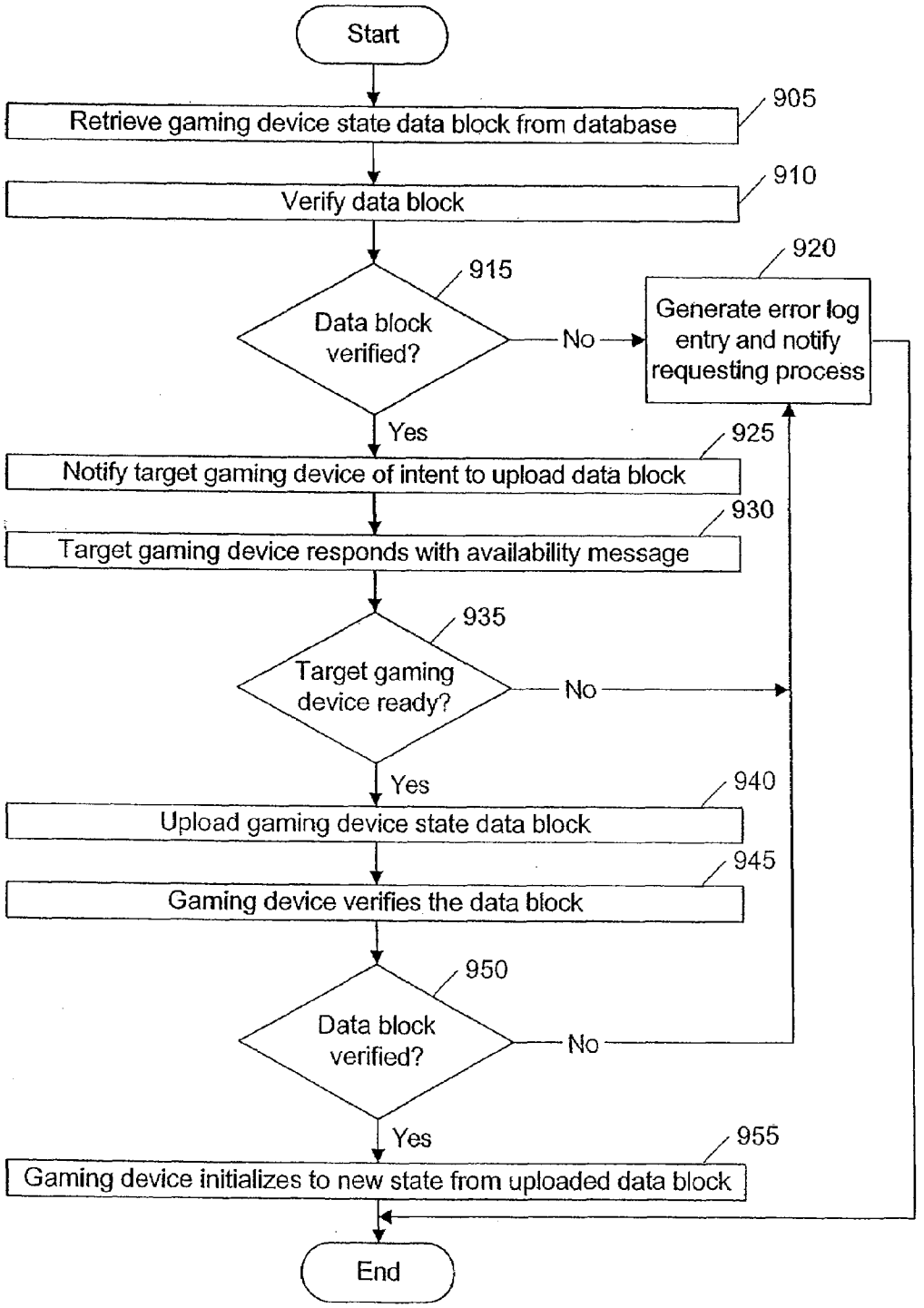
Start
Retrieve gaming device state data block from database
905
Verify data block
910
Data block verified?
915
No
Generate error log entry and notify requesting process
920
Yes
Notify target gaming device of intent to upload data block
925
Target gaming device responds with availability message
930
Target gaming device ready?
935
No
Yes
Upload gaming device state data block
940
Gaming device verifies the data block
945
Data block verified?
950
No
Yes
Gaming device initializes to new state from uploaded data block
955
End

FIG. 9

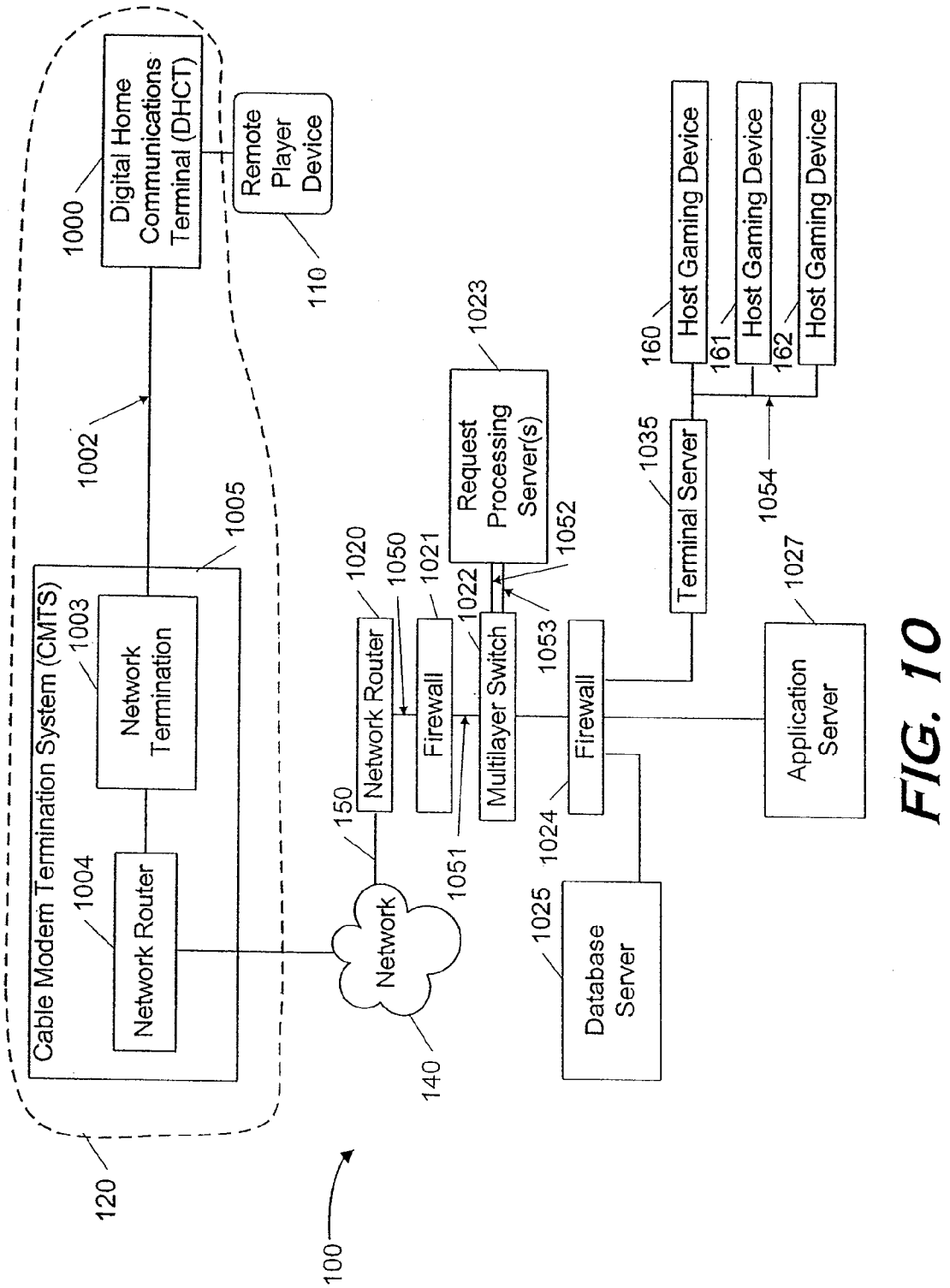
100
120
Cable Modem Termination System (CMTS)
1003
Network Termination
1004
Network Router
1005
1002
1000
Digital Home Communications Terminal (DHCT)
Remote Player Device
110
Network
140
150
Network Router
1020
1050
Firewall
1021
1051
1022
Multilayer Switch
1053
Request Processing Server(s)
1023
1052
Firewall
1024
Database Server
1025
Application Server
1027
1054
Terminal Server
1035
160
Host Gaming Device
161
Host Gaming Device
162
Host Gaming Device

FIG. 10

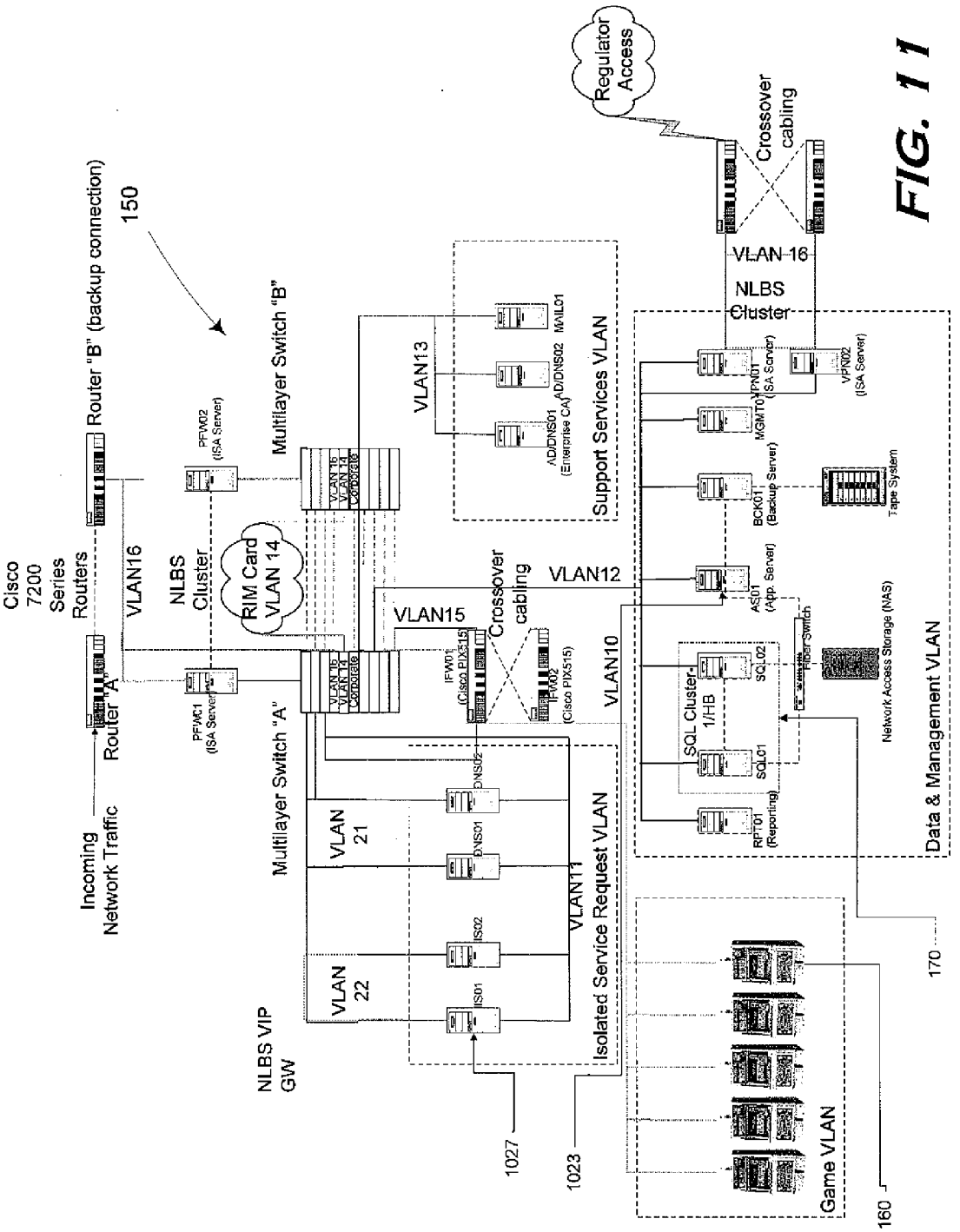
Regulator Access
Crossover cabling
VLAN-16
NLBS Cluster
Router "B" (backup connection)
150
Cisco 7200 Series Routers
Router "A"
Incoming Network Traffic
VLAN16
NLBS Cluster
RIM Card VLAN 14
Multilayer Switch "B"
Multilayer Switch "A"
PFW02 (ISA Server)
PFW01 (ISA Server)
VLAN13
VLAN15
VLAN12
VLAN10
VLAN11
VLAN 21
VLAN 22
Crossover cabling
IFW01 (Cisco PIX515)
IFW02 (Cisco PIX515)
Support Services VLAN
MMLO1
AD/DNS02
AD/DNS01 (Enterprise CA)
DNS02
DNS01
IS02
IS01
Isolated Service Request VLAN
NLBS VIP GW
1027
1023
VPN01 (ISA Server)
VPN02 (ISA Server)
MGMT01
BCK01 (Backup Server)
Tape System
AS01 (App. Server)
Fiber Switch
Network Access Storage (NAS)
SQL Cluster 1/HB
SQL02
SQL01
RPT01 (Reporting)
Data & Management VLAN
Game VLAN
170
160

FIG. 11

SYSTEM AND METHOD FOR CONNECTING GAMING DEVICES TO A NETWORK FOR REMOTE PLAY

RELATED APPLICATIONS

[0001] This application is a divisional of U.S. application Ser. No. 10/913,301, filed on Aug. 5, 2004, which is a continuation of U.S. application Ser. No. 10/682,095, filed on Oct. 8, 2003, which claims priority to U.S. Provisional Application No. 60/417,913, filed on Oct. 9, 2002, each of which is incorporated by reference in its entirety.

[0002] U.S. application Ser. No. 10/913,301, filed Aug. 5, 2004, is also a continuation-in-part of U.S. application Ser. No. 09/698,507, filed Oct. 26, 2000 entitled "CRYPTOGRAPHY AND CERTIFICATE AUTHORITIES IN GAMING MACHINES" which is based on, and claims priority to U.S. Provisional Application No. 60/161,591, filed Oct. 26, 1999. Each of the foregoing patents and applications are incorporated by reference in their entirety.

BACKGROUND OF THE INVENTION

[0003] 1. Field of the Invention

[0004] The present invention generally relates to electronic devices. In particular, the invention relates to methods and systems of interactive gaming.

[0005] 2. Description of the Related Technology

[0006] Traditionally, the way for a gaming operator to increase revenue from gaming devices is to increase the number of gaming devices available for play. In order for casinos to increase the number of gaming devices available for play, casino floor space must be added to house the additional gaming devices. The floor space allocated to house additional gaming devices must meet specific criteria as defined by the gaming authority for the jurisdiction in which the gaming devices are to be located. Providing additional floor space is an expensive process for casino operators and often requires constructing new casino properties. Also, adding gaming devices typically requires payment of additional licensing fees for each additional game.

[0007] A trend in the gaming industry has been to provide Internet gaming. Internet gaming allows players to make wagers on the outcome of casino style games similar to that described above, except that the player does not have to be physically located in a casino to do so. Internet players make wagers and play casino games using a personal computer and wager on games running on computers connected to the Internet.

[0008] More broadly, interactive gaming is the conduct of gambling games through the use of electronic devices. The popularity of Internet gambling sites has indicated a strong market for remotely accessible gaming, or other interactive gaming. Regulated casino operators strongly desire to provide interactive gaming while capitalizing on existing infrastructure. Thus there is a need for improved electronic devices that support regulated remote gaming.

SUMMARY OF THE INVENTION

[0009] The system of the present invention has several aspects, no single one of which is solely responsible for its desirable attributes. Without limiting the scope of this invention as expressed by the claims which follow, its more prominent features will now be discussed briefly. After considering this discussion, and particularly after reading the section entitled "Detailed Description of the Invention" one will understand how the features of this invention provide advantages which include providing remote gaming in regulated environment.

[0010] A gaming system and method of using the same to allow a host gaming device to be played from remote player devices to allow casino operators to obtain maximum advantage from their gaming licenses.

[0011] More particularly, in one embodiment gaming system may comprise a data network, a host gaming device connected to the data network, the gaming device configured to execute at least one game and a plurality of remote player devices connected to the data network. Each of the remote player devices is configured to receive game information provided by the host gaming device. Whether each remote player device is permitted to receive gaming data may be based upon, at least in part, the geographic location of the remote player device.

[0012] The host gaming device may be configured to allow no more than a predetermined number of remote player devices to concurrently receive game information provided by the host gaming device during the gaming session. This predetermined number may be determined by a gaming agency.

[0013] In another embodiment of a gaming system, at least one of the plurality of remote player devices may be permitted to receive game data based upon, at least in part, the geographic location of the remote player device, an age of a user of the remote player device.

[0014] A gaming system according to the invention may also include a central gaming controller configured to record gaming transactions on the host gaming device and on each remote gaming device.

[0015] The data network may be, in part, the Internet, and be comprised of one or more logical segment, which may include closed-loop networks. The host gaming device may be configured to identify the geographic location of a remote player device based, at least in part, on a logical segment corresponding to the remote player device. A mobile communications network, or a GPS device may also allow identification of the geographic location of the remote player device.

[0016] The host gaming device may be in a location approved by a gaming agency and include at least one game control configured to provide local use. This game control may be disabled when the host gaming device is providing game information to a remote player device. A host gaming device may also be configured to save an encrypted game state allowing a game to be resumed following a device or network failure.

[0017] A remote player device may be coupled to a credential device configured to receive information relating to a user of the remote player device. The information relating to a user may include the age of the user, or a password that is input by the user. The credential device is a smart card reader, a biometric device such as a fingerprint reader, or any type of input device. The credentials may be verified against information, such as age, password, or fingerprint in a database configured to provide information associated with each of a plurality of users of the gaming system.

[0018] In another embodiment, a gaming system may be comprised of a means for executing at least one game, the game providing game information during its execution, a local access means provides local access to the game information for a user in a location approved by a gaming agency,

player means for receiving game information, presenting the game information to a user and providing at least one game control, a means for providing the game information over a data network to a predetermined number of receiving means, means for determining the location of the receiving means, and means for disabling the local access means. Other similar embodiments may also be comprised of means for creating an auditable record of gaming transactions on the playing means and on the gaming means.

[0019] Another embodiment of a gaming system, in addition to the features of the embodiments discussed above, may also include customized promotional messages to players of gaming devices.

[0020] On a remote player device, an embodiment of a method of remotely accessing a host gaming device may include: establishing access to the host gaming device through a data network, receiving gaming related information from the host gaming device through the data network, presenting the gaming related information to a player, receiving at least one control signal from the player, sending the control signal to the host gaming device through the data network, and disabling local use of the host gaming device. In one embodiment, the method may also include recording each gaming transaction occurring on the remote player device. Another embodiment of the method may include providing a geographic location of the remote player device. In another embodiment of the method, the age of the user of the remote player device is also provided.

[0021] On a host gaming device, an embodiment of a method of providing remote access, including: verifying the geographic location of a remote player device, establishing a gaming session on a host gaming device from a remote player device through a data network, receiving at least one control signal from the remote player device through the data network, and sending gaming related information from the gaming device through the data network. One embodiment of a method may also include recording each gaming transaction occurring on the host gaming device,

[0022] In order to provide tolerance for failures of system components, a method of resuming an interrupted gaming session on a gaming device is provided. One embodiment of a method may include generating a gaming state of the gaming session on the first gaming device, encrypting the gaming state, transporting the encrypted gaming state from the gaming device. The method may also include the converse: transporting the encrypted gaming state from the first gaming device to a second gaming device, decrypting the gaming state on the second gaming device; and loading the game state into a second gaming device to resume the gaming session.

[0023] An embodiment of a gaming system which provides for resuming interrupted gaming sessions across a data network. The system may include a first host gaming device connected to the data network, the gaming device configured to execute at least one game, generate a gaming state based on execution of at least one game, encrypt the gaming state, and send the encrypted gaming state over the data network. A second host gaming device may be connected to the data network, the second gaming device configured to receive the encrypted gaming state over the data network, decrypt the gaming state, and resume executing at least one game from the gaming state. A plurality of remote player devices, configured to receive game information provided by the host gaming device, may be connected to the data network. The gaming state may include user payment or credit information, and game jackpot or payout information.

[0024] Another embodiment of a gaming system providing resumption of interrupted gaming sessions may include means for executing at least one game, means for generating a gaming state based on execution of at least one game, means for encrypting the gaming state, and means for sending the encrypted gaming state. The system may also include means for receiving the encrypted gaming state, means for decrypting the gaming state and means for resuming executing at least one game from the gaming state.

[0025] To enable gaming regulatory compliance, methods authenticating gaming system users are also provide. An embodiment of a method of authenticating a user of a host gaming device may include receiving a security certificate from the smart card, sending the security certificate from the gaming device to an authenticator device, receiving an authentication reply from the authenticator, and playing a game in response to the authentication reply.

[0026] An embodiment of the method may also include presenting the security certificate from the gaming device to a certificate authority for authentication over a data network.

[0027] An embodiment of a method of authenticating a user of a remote player device for playing a host gaming device may include receiving an indicia of identity for a user, sending the indicia of identity to an authenticator device, receiving an authentication reply from the authenticator device, and authorizing use of a host gaming device based on the indicia of identity. The indicia of identity for a user may be provided by a biometric device, a smart card, or a password provided by the user.

[0028] Another embodiment of a gaming system provides authentication of users. The system may include a data network, a host gaming device interfaced to the data network, a plurality of remote player devices interfaced to the data network, and a security device configured to provide player credentials to at least one remote player device. The each of the remote player devices may be configured to receive game information provided by the host gaming device. The host gaming device may provide game information to a predetermined number of permitted remote player devices. Whether a remote player device is permitted to receive gaming information may be based upon, at least in part, on player credentials provided by the security device.

[0029] In one embodiment, a method of remotely accessing a gaming device provides for creating records of gaming transactions on both host gaming devices and remote player devices sufficient to provide an auditable record for a gaming authority in the jurisdiction. The method may include establishing a gaming session on a gaming device for a remote player device through a data network, sending gaming related information from the gaming device through the data network, receiving at least one control signal from the remote player device through the data network, creating an auditable gaming session record representing each gaming transaction of a gaming session on the host gaming device and on the remote gaming device. In addition, the record may be sent to a third party, such as a gaming authority, through the data network.

[0030] In another embodiment of a gaming system, the gaming system includes a network comprised of a plurality of logical segments. A security policy controls the flow of data between logical segments. A host gaming device may be connected to the data network, the gaming device configured

to execute at least one game. A plurality of remote player devices may be connected to the data network. The plurality of remote player devices are each configured to receive game information provided by the host gaming device, and to control a gaming session established on the gaming device, subject to the security policy. The security policy may be based, at least in part, on the geographic location of a logical segment.

[0031] One embodiment of the gaming system may include a promotional message server to deliver customized promotional messages to users of the gaming system. In this embodiment, a gaming system may include a data network, a promotional message server configured to provide customized promotional messages. Each message may be customized with information associated with a user of the gaming system. In addition, a gaming system may include a host gaming device interfaced to the data network, and a plurality of remote player devices interfaced to the data network. The plurality of remote player devices are each configured to receive game information provided by the host gaming device and to receive and present promotional messages.

[0032] In another embodiment, a gaming system may include a means for data communication, means for executing at least one game, means for providing game information over the data network to a predetermined number of receiving means, a plurality of means for receiving game information over the data communication means. Each means for receiving game information may be coupled to a means for receiving customized promotional messages. A gaming system may also include a means for presenting promotional messages in conjunction with gaming data.

[0033] A related method of displaying information on a remote player device is also provided. The method may include receiving a promotional message on a remote player device, presenting the promotional message in conjunction with gaming information for an amount of time; and removing the promotional message from the remote player device. Information in the promotional message may be used to calculate the amount of time to present the promotional message.

[0034] A remote player interface of a gaming system may have a number of embodiments. In one embodiment of a gaming system, the gaming system includes data network, a host gaming device interfaced to the data network, and at least one remote player device interfaced to the data network. The remote player device is configured to receive game information provided by the host gaming device. The remote player interface of the gaming system may include a video display device in communication with the remote player device and a remote control device in communication with the remote player device. The remote control device is configured to control operation of a game.

[0035] An embodiment of method of remotely accessing a gaming device may include establishing a gaming session on the host gaming device from a remote player device through a data network, receiving gaming related information from the host gaming device through the data network, presenting gaming related information to a player via a video display device, receiving at least one control signal generated by a remote control device for controlling the gaming session, and sending the control signal to the host gaming device through the data network.

BRIEF DESCRIPTION OF THE DRAWINGS

[0036] FIG. **1** depicts a simplified block diagram of a gaming system according to one embodiment of the invention.

[0037] FIG. **2** depicts a simplified block diagram of system elements relating to a host gaming device of FIG. **1** according to one embodiment of the invention.

[0038] FIG. **3** depicts a simplified block diagram of system elements relating to a remote player device of FIG. **1** according to one embodiment of the invention.

[0039] FIG. **4** is a flowchart depicting the sequence of events for acknowledging command messages in a gaming system as embodied in FIG. **1**.

[0040] FIG. **5** is a flowchart depicting the sequence of events for establishing a remote gaming session, playing a game, and terminating the remote gaming session in a gaming system as embodied in FIG. **1**.

[0041] FIG. **6** is a flowchart depicting the sequence of events for transferring funds from a player's source of funds in the gaming system of FIG. **1**.

[0042] FIG. **7** is a flowchart depicting the sequence of events for a host gaming device of FIG. **2** to connect to a network using security certificates and a certificate authority.

[0043] FIG. **8** is a flowchart depicting the sequence of events for a gaming device of FIG. **2** to build and deliver an encrypted block of data representing the complete state of the gaming device.

[0044] FIG. **9** is a flowchart depicting the sequence of events for retrieving a block of data representing the state of a gaming device from a database and loading the block into a gaming device as performed by a gaming system embodiment as in FIG. **1**.

[0045] FIG. **10** is a more detailed block diagram of a gaming system as depicted in FIG. **1**.

[0046] FIG. **11** is a detailed block network diagram of a portion of a gaming system as depicted in FIG. **10**.

DETAILED DESCRIPTION OF THE PREFERRED EMBODIMENT

[0047] The following detailed description is directed to certain specific embodiments of the invention. However, the invention can be embodied in a multitude of different ways as defined and covered by the claims. In this description, reference is made to the drawings wherein like parts are designated with like numerals throughout.

[0048] In a traditional casino environment, gaming devices are generally located on a gaming floor. Gaming devices are subject to regulation by gaming regulatory agencies. Regulations may limit the locations where gaming devices may be placed and by limit users of gaming devices to those of legal age to gamble in the respective jurisdiction. Regulatory agencies for a given jurisdiction may also limit the number of licensed gaming devices provided to a licensee. Where gaming devices are physically located on a casino gaming floor, verification of whether a device is being used in its licensed location within the jurisdiction may be determined by physical inspection of the gaming floor. Further, monitoring of the gaming floor in casinos ensures that players are of legal age as set by the jurisdiction.

[0049] An embodiment of a gaming system according to the present invention allows a licensed host gaming device to be used by one or more remote player devices geographically separated from the host gaming device, but still located within the jurisdiction of a gaming authority. FIG. **1** depicts a simplified block diagram of an embodiment of a gaming system **100** according to the invention. One or more host gaming devices **160**, **161**, **162** are licensed gaming devices. Although three host gaming devices are shown on FIG. **1**, the gaming

system **100** may employ any number of host gaming devices ranging from one to thousands. For convenience of discussion, set forth below is a description of certain aspects of the host gaming device **160**. It is to be appreciated that the other gaming devices may contain the following or different aspects.

[0050] A host gaming device may be any device, comprised of electronic, mechanical, or a combination of electronic and mechanical components, which is used for gaming and which affects the result of a wager by determining win or loss. A host gaming device **160** is connected to a data network **150**. In the embodiment depicted in FIG. **1**, the data network of gaming system **100** is comprised of three logical segments. Gaming network **150** connects each host gaming device **160** and related elements such as the database **170** and central gaming controller **180**. Remote network **120** connects remote player devices **110**, **111**, **112** to the system. Backbone network **140** provides interconnection between the gaming network **150** and the remote network **120**.

[0051] The database **170** may be computer server running database software, or any other commercially available database solution. In one embodiment, as depicted, the database **170**, is a casino database. In other embodiments, the database may also contain other data related, or unrelated to the casino operation.

[0052] Remote network **120** connects remote player devices **110**, **111**, **112** to the system. Each remote player device **110** allows a user to play a game executing on a host gaming device **160**. For convenience of discussion, set forth below is a description of certain aspects of the remote player device **110**. It is to be appreciated that the other remote player devices may contain the following or different aspects. Although three remote player devices are shown on FIG. **1**, the gaming system **100** may employ any number of remote player devices ranging from one to thousands.

[0053] The remote network **120** may be any form of computer network, as discussed below. In one particular embodiment, the remote network **120** is part of a network provided by a cable television system. FIG. **10** depicts an embodiment of a gaming system where the remote network **120** is provided through a digital home communications terminal (DHCT) **1000**, such as a set-top box.

[0054] Each host gaming device **160** may be located in any location approved by a gaming agency, such as a casino gaming floor. A host gaming device **160** provides a legally regulated random number generator. Once generation of random number has been performed, a game result is determined. Any further interaction through the game's user interface is for the benefit of a user. For example, in one embodiment of a gaming system, the host gaming device may be a slot machine. After payment is made, through a coin, token, credit device, etc, the player pulls a lever arm to execute play. In a mechanical game, for example, a slot machine, a game result may be determined by the interaction of spinning wheels. In a host gaming device **160** of an embodiment of the present invention, however, pulling the arm triggers generation of a random number which determines the game result. Thus any spinning wheels or its electronic equivalent is purely for entertainment of the user. A host gaming device **160** plays at least one game of chance, including, but not limited to, Slots, Blackjack, Poker, Keno, Bingo, or Lotteries.

[0055] FIG. **2** depicts a more detailed block diagram of an embodiment of a gaming system **100** showing additional gaming system elements coupled to the host gaming device **160**. The host gaming device **160** may include local controls **220** such as an arm. The host gaming device **160** may have a display **210** to present the results of a game to a user. Further, the gaming device **160** may have a smart card reader **280**. Functions of the smart card reader **280** may include receiving payment for a game, or identifying a user for promotional or loyalty programs. A biometric identity device **290**, such as a fingerprint scanner, may be used for similar functions by the gaming system.

[0056] Networks **120**, **140**, **150** may include any type of electronically connected group of computers including, for instance, the following networks: Internet, Intranet, Local Area Networks (LAN) or Wide Area Networks (WAN). In addition, the connectivity to the network may be, for example, remote modem, Ethernet (IEEE 802.3), Token Ring (IEEE 802.5), Fiber Distributed Datalink Interface (FDDI) Asynchronous Transfer Mode (ATM), Wireless Ethernet (IEEE 802.11), or Bluetooth (IEEE 802.15.1). Note that computing devices may be desktop, server, portable, hand-held, set-top, or any other desired type of configuration. As used herein, the network includes network variations such as the public Internet, a private network within the Internet, a secure network within the Internet, a private network, a public network, a value-added network, an intranet, and the like. In embodiments of the present invention where the Internet is the backbone network **140**, gaming network **150** and remote network **120** may form a virtual private network (VPN) transported over the Internet.

[0057] In preferred embodiments, the remote network **120** may be a closed-loop network, such as the cable network depicted in FIG. **10**. A closed-loop network **120** may have a limited geographic scope which allows the geographic location of a remote player device **110** to be identified. For example, a given cable network may be limited to a specific hotel. Each hotel room may be provided with a remote player device **110** which may then be identified with that location. In other embodiments, the remote network **120** may be a mobile telephone network which is capable of identifying a caller's geographic location.

[0058] As depicted in the simplified block diagram of FIG. **3**, a remote player interface **300** may comprise a remote player device **110**, a display **310** for presenting game information and a control **320** to provide user game control for the remote player device **160**. In one embodiment, a remote player interface **110** may also comprise a remote control **395** to provide game controls. In preferred embodiments of the remote control, the connection **394** between the remote control **395** and the remote player device **160** may be any type of wireless connection, including infra-red based protocols, or a RF wireless protocol such as Bluetooth (802.15.1). The remote control **395** may also be connected to the remote player device **160** through a wired connection such as Universal Serial Bus (USB), serial, or equivalent connection. The remote control **395** may also include controls customized for gaming. A handheld computer may also comprise a remote control **395**.

[0059] The display **310** may be a television, a personal computer, or a handheld computer device. A fixed or wireless telephone handset may comprise a display **310** and controls **320** of a remote player interface. In some embodiments the controls **320** may be integrated with display **310**, as for instance, in a touch screen.

[0060] In one embodiment, the game information may be a random number which represents the result of the game, information related to gaming device jackpots, or player credits. In another embodiment, the gaming information may be multimedia, sound and images, including, in one embodiment, video, representing the execution of a game. In another embodiment, game information may also be software for execution on a remote player device **110** or on any element of a remote player interface **300**, such as a remote control **395**, which interactively presents the game through the remote player interface **300**.

[0061] To enable regulatory conformance of the gaming system, gaming device users must be geographically within an approved jurisdiction and of legal age in the jurisdiction. In a regulated gaming environment, such as a gaming floor, physical control of the premises allows enforcement of this requirement. For remote player devices **110** not operated in the regulated gaming environment of a gaming floor, the age of the user of a remote player device **110** must be verified before game information is provided by a host gaming device **160**. Credentials may be received from a user using a variety of security devices and compared to records, such as in a database **170** to confirm identity and thus age of the user.

[0062] To ensure compliance with regulatory requirements, a gaming system **100** may identify the geographic location of a remote player device **110**. As discussed above, a network **120** may be a closed-loop network **120** whose devices are thereby identified in geographic location by the location of that network. Other embodiments may employ a GPS system on the remote player device **110** to provide the geographic location of the device **110**. In other embodiments, the remote network **120** may be a mobile communications network which provides the geographic location of network clients, such as a remote player device **110**.

[0063] In one embodiment, a security device may be a smart card reader **380** that is coupled to the remote player device **110**. In embodiments using a smart card reader, a user inserts a smart card into the reader which provides credentials sufficient to verify the age of the user. In one such embodiment, indicia present on the smart card reader are compared to records in a casino database **170** to verify the age of the user.

[0064] In other embodiments, a remote player device **110** may be coupled to a biometric identity device **390**, such as a fingerprint scanner. In one embodiment, information received from the biometric identity device **390** may be compared to records in a casino database **170** to verify the age of the user. In other embodiments a biometric identity device **390** may be retinal scanner or facial recognition device.

[0065] In some embodiments, the controls **320** may include an input device (not pictured in FIG. **3**) coupled to a remote player device **110** to receive a password or PIN as a security device. The password or PIN may be compared to information, such as records in a casino database **170** to verify the identity, and thus the age, of the remote player device user. For example, the input device may be a keyboard, rollerball, pen and stylus, mouse, or voice recognition system. The input device may also be a touch screen associated with an output device. The user may respond to prompts on the display by touching the screen. The user may enter textual or graphic information through the input device. The controls **320** may be coupled to a display **310** in the form of a personal computer, a television, a television with a set-top box, a handheld computer, or a telephone, fixed or mobile, handset.

[0066] Embodiments of a remote player device **110** may be a television, a cable interactive set-top box, a remote control, a personal computer, or a mobile or fixed telephone handset. Another embodiment may comprise a handheld computer coupled to a fixed or preferably wireless network. Also, a host gaming device **160** may also be a remote player device **110**.

[0067] In one embodiment, a remote gaming device **110** may be in a location approved by a gaming agency with controls **320** and display **310** which match the appearance of a stand-alone gaming device. For example, a remote gaming device **110** may be appear to be a slot machine with an arm control **320**, a mechanical or electronic "slots" display **310**. In other embodiments, remote gaming devices **110**, regardless of location, may have controls and displays which match the appearance of a host gaming device **160**. This may include control devices coupled to personal computers or set-top boxes which may be customized for one or more games.

[0068] Indicia of identity and age received from a smart card reader **380**, biometric identity device **390**, or user entry of a password may also be compared to records stored on the remote player device **110**. For example, a remote player device **110** in a hotel room may be programmed by hotel staff to store identification information for eligible guests in the room containing the gaming device without the identification information being included in the casino database **170**. In these embodiments, access to the remote player device thus may itself be an indicium of legal age to the central gaming controller **180** or host gaming device **160**.

[0069] A central gaming controller **180** may manage the interaction of remote player devices and host gaming devices. The central gaming controller **180** may comprise one or more server computers or may be integrated with a host gaming device. In the embodiment depicted in FIG. **10**, the application server **1027** and request processing servers **1023** comprise the central gaming controller **180**.

[0070] One embodiment of a gaming system **100** comprises a single remote player on a remote player device **110** establishing a gaming session on a host gaming device **160** with no local player using the host gaming device **160**. In this embodiment, the local controls **220** of a host gaming device **160** become disabled for local play during the remote gaming session. Correspondingly, a host gaming device **160** in this embodiment also becomes unavailable for remote play while a player uses the local controls **220** to use the host gaming device **160**.

[0071] Another embodiment comprises a single player using the local controls **220** of a host gaming device **160** and a single remote player on remote player device **110** concurrently. Thus in this embodiment, the local game controls **220** on the host gaming device **160** are not disabled during the remote gaming session.

[0072] Another embodiment of the gaming system **100** comprises a single local player of the host gaming device **160** and multiple remote players on a plurality of remote player devices **110** having concurrent gaming sessions. A similar embodiment comprises multiple concurrent remote players and no local players on the host gaming device **160** because the local controls **220** may be disabled during the remote gaming sessions.

[0073] Another embodiment of a gaming system **100** comprises one or more remote player devices **110** which are physically located in a location approved by a gaming agency and networked to a host gaming device **160** that hosts both local and remote player sessions. Players physically located

in the casino may occupy a remote player device **110** and play the games provided by the host gaming device **160**. Concurrently, gaming sessions to one or more remote player devices **110** physically located outside the casino may be provided. Thus, in this embodiment, players may concurrently play using the host gaming device **160**, a physically remote player device **110**, or a remote player device **110** in a location approved by a gaming agency.

[0074] Another embodiment of the invention comprises one or more remote player devices **110**, physically located in a location approved by a gaming agency and at least one host gaming device **160**. In this embodiment, player sessions may only be established on a host gaming device **160** from a remote player device **110** if that remote player device **110** is physically located in a location approved by a gaming agency, such as a casino gaming floor. Players may also play the host gaming device **160** using local controls **220** concurrently with remote player sessions. Thus, in this embodiment, players may concurrently play using the host gaming device **160**, or a remote player device **110** that is located in a location approved by a gaming agency.

[0075] In each of the above disclosed embodiments, the remote player devices **110** that may concurrently receive game information from a host gaming device **160** may be limited to a predetermined number that is determined by a regulatory gaming agency for the jurisdiction.

[0076] A remote player device **110** that is physically located in the casino in a location approved by a gaming agency, such as a casino gaming floor, may differ from a remote player device physically located outside the casino floor. In one embodiment, a remote player device **110** located in a location approved by a gaming agency resembles the appearance of a stand-alone gaming device and may thus be similar in appearance and operation to the host gaming device **160**.

[0077] In one embodiment, a remote player device **110** requests game data from the host gaming device **160** by sending a request for a game to a central gaming controller **180**. The central gaming controller **180** then transmits the request for a game to the host gaming device **160**. The host gaming device **160** receives the request and provides game data to the central gaming controller **180** that passes to the remote player device **110**. That information is then translated into a game by the remote player device **110** and displayed or performed to the player. The remote player device **110** may contain on-board hardware and software that may be required to present a game. The regulated portion of hardware and software required to execute a game, such as a random number generator, is on the host gaming device **160** and the information transmitted to the remote player device **110** each time a game is requested.

[0078] Gaming devices according to an embodiment of the invention may use mixed-protocol delivery systems for game content and game results. Game information and results comprising image and sound data may be delivered by packet based network protocols such as IP datagrams, by connection-oriented network protocols, or by a combination of both. Streaming media protocols may also be employed. During a given gaming session, these communication methods may be used interchangeably or concurrently.

[0079] In one embodiment, communication over the data networks **120**, **140**, or **150**, may use IP datagrams to package image and sound data comprising a host gaming device interface and display, encrypts it, and delivers it to the remote player device.

[0080] Internet Protocol (IP) is a network layer protocol used by many corporations, governments, and the Internet worldwide. IP is a connectionless network layer protocol that performs addressing, routing and control functions for transmitting and receiving datagrams over a network. The network layer routes packets from source to destination. An IP datagram is a data packet comprising a header part and a data part. The header part includes a fixed-length header segment and a variable-length optional segment. The data part includes the information being transmitted over the network. As a connectionless protocol, IP does not require a predefined path associated with a logical network connection. Hence, IP does not control data path usage. If a network device or line becomes unavailable, IP provides the mechanism needed to route datagrams around the affected area.

[0081] The remote player interacts with a game through a remote player interface **300**. A remote player device **110** may send commands back to the central gaming controller **180** as, in one embodiment, IP datagrams. The IP datagrams are interpreted by the central gaming controller **180** and used to proxy user interface interaction between the gaming device and the remote player. Game results may also be packaged as IP datagrams and delivered to the remote player through this method.

[0082] Alternative embodiments may use connection-oriented protocols such as TCP, or a combination of connection oriented protocols and connectionless packet protocols such as IP. Transmission Control Protocol (TCP) is a transport layer protocol used to provide a reliable, connection-oriented, transport layer link among computer systems. The network layer provides services to the transport layer. Using a two-way handshaking scheme, TCP provides the mechanism for establishing, maintaining, and terminating logical connections among computer systems. TCP transport layer uses IP as its network layer protocol. Additionally, TCP provides protocol ports to distinguish multiple programs executing on a single device by including the destination and source port number with each message. TCP performs functions such as transmission of byte streams, data flow definitions, data acknowledgments, lost or corrupt data re-transmissions, and multiplexing multiple connections through a single network connection. Finally, TCP is responsible for encapsulating information into a datagram structure.

[0083] Static content comprising the game interface or other elements of the game may be delivered to the remote player device **110** and stored on the remote player device. This delivery of content may use a mixed-protocol as described above. A static image may be a fixed image or an animation activated by the remote control device. Such images may further be overlaid with additional game content such as images and sound that is delivered dynamically during game play.

[0084] In an embodiment of the invention, a central gaming controller **180** converts image and sound data comprising the gaming device interface and display from the remote machine into a data stream (for example but not limited to MPEG-2), encrypts it, and delivers it to the remote player device **110**. The remote player interacts with the game using the remote player interface **300** to send commands back to the central gaming controller as IP datagrams. The IP datagrams may be interpreted by the central gaming controller **180** and used to

proxy user interface interaction between the gaming device **160** and the remote player device **110**. Game results may also be packaged as a data stream and delivered to the remote player through this method.

[0085] FIG. **4** is a flowchart depicting a method employed when a command message is acknowledged by a central gaming controller **180** according to one embodiment of a gaming system **100**. Depending on the embodiment, additional steps may be added, others removed, steps merged, or the order of the steps rearranged. Note that in some embodiments, not all messages received by the central gaming controller **180** need be acknowledged. Starting at step **401**, a command message is sent to the central gaming controller **180** by a host on the network. The host may be remote player device **110** used for remote play, or other authorized network devices. Next, at step **405**, a qualified request message is received by the central gaming controller **180**. Moving to step **410**, the message is then recorded in a database. The database may be a casino database **170**. Proceeding to step **415**, the message is processed and a response prepared. Next at step **420**, the response is recorded in the database. Moving to step **425**, the response is sent back to the requesting device. At step **430**, a test to determine whether an acknowledgment of the message has been received is made. Continuing at step **435**, if the timeout value has passed control continues to step **440**, if the timeout period has not expired control returns to step **430**. Moving to step **440**, whether the message has not been acknowledged by the originating host is tested. If acknowledgement has been received, control proceeds to **445**, if not control proceeds to step **455**. At step **445**, the message status is recorded as "RECEIVED" and the process moves to the end state. Returning to step **455**, where the process flow continues following an unacknowledged message, the system sends a status request message to the sending host. Next, at step **460**, if the originating device responds to the message then flow continues to step **465**, otherwise control moves to step **480**. Moving to step **465**, a diagnostic message is sent to query whether the originating device is ready to receive the original message. Next at step **470**, if the originating host responds that it is ready to receive the original message, then control transfers to step **425** but if the originating host fails to respond then control moves to step **480**. Moving to step **480**, the status of the originating host is set to offline until such time as the originating host can respond or reinitializes, and the process moves to the end state.

[0086] FIG. **5** is a flowchart depicting a method used when a request for a remote gaming session is received, when playing a game, and when terminating the remote gaming session. Depending on the embodiment, additional steps may be added, others removed, steps merged, or the order of the steps rearranged. Starting at **510**, a request for a remote gaming session is received as a request for a secured encrypted connection to the central gaming controller **180**. Included in the request are the remote players security credentials in the form of a security certificate, for example, X.509 certificate. Next at **515**, the security credentials are authenticated. This authentication may be performed by submitting the security certificate to a certificate authority for authentication. Moving to **520** if the player is not authenticated, control reverts to **515**. Continuing to step **525**, the central gaming controller **180** establishes a secure encrypted connection with the remote player device **110**. Next, at step **530**, if required the player transfers funds to use during the remote gaming session. Continuing to step **535**, the player then chooses a host gaming device **160** to play. Next, at step **540**, in one embodiment, when a host gaming device **160** is chosen for remote access play the local controls of the host gaming device **160** is disabled to prevent local play. Moving on to step **545**, a remote play session is opened on the host gaming device **160**. Continuing at step **550**, after a remote gaming session is established on the host gaming device, the central gaming controller **180** sends a message to the host gaming device **160** instructing it to displace representations of its user controls, graphics and sounds to the remote player interface **300**. The central gaming controller **180** directs the host gaming device **160** controls over the secured encrypted connection and manages the remote gaming session. Next at step **555**, the remote player may transfer funds from a player account to the host gaming device **160** for wagering on the host gaming device **160**. Moving to step **560**, a wager is made. Next at, **656** a game is played. Continuing to step **570**, the central gaming controller **180** delivers the results of the game to the remote player interface **300**. Next at step **571**, the remote player may repeat the sequence from step **560**. Next at step **575**, if there are any credits on the host gaming device **160** when the player terminates the remote gaming session, the central gaming controller **180** automatically transfers those credits back to the players account. Moving to step **580**, the central gaming controller **180** terminates the remote gaming session with the host gaming device **160**. Continuing to step **585**, the central gaming controller **180**, enables local play on the host gaming device **160**, control is then transferred to the end state.

[0087] FIG. **7** is a flowchart depicting a method for a host gaming device **160** to become connected to a network using security certificates and a certificate authority. Depending on the embodiment, additional steps may be added, others removed, steps merged, or the order of the steps rearranged. Starting at **705**, a host gaming device **160** starts the process of connecting to a network as part of its initialization mode. Continuing to step **720**, at a point during initialization, the host gaming device **160** submits a security certificate to a certificate authority for authentication. Moving to step **725**, the certificate authority authenticates the certificate. Next at step **730**, if the certificate is authenticated control moves to step **740**, otherwise control moves to step **735**. Continuing on to step **740**, the host gaming device **160** is permitted onto the network and the process moves to its end state. Returning to step **735**, if the certificate is not authenticated then a log entry is generated and the host gaming device **160** is not permitted onto the network.

[0088] Embodiments according to the invention may also use instant messaging and/or email messaging systems. Typical instant messaging systems permit computer users to type text messages and add file attachments into a host program and have the host program automatically deliver the text through a virtual direct connection to a target computer. Public email systems are those available for general use, as over the internet. Examples of public instant messaging systems in use today include but are not limited to chat programs like IRC, MSN Messenger, AOL Instant Messaging and a host of others. Private systems are restricted to a casino or gaming system. Typical email messaging systems permit messages and file attachments to be entered into a host program and addressed to a specific recipient on a network. These messages may not be delivered directly to the addressee, but are sent to a storage area where the recipient may retrieve the message at a time of their own choosing.

[0089] Gaming devices **160** and remote player devices **110** routinely exchange information with a central gaming controller **180** for, typically, but not limited to, account and game tracking functions. In one embodiment of the invention, devices may send and receive data over public and/or private email-type messaging systems. The message body of any particular message may vary, using a proprietary or non-proprietary format, and may be encrypted or in human-readable format. Messages may be sent at a time determined by the message originator, typically, but not exclusively, in response to an event. The recipient of the message may be any device capable of consuming the message. The message recipient may be responsible for checking the prescribed message storage area for messages addressed to it. The message recipient may reply to a received message or may generate a new message to a specific recipient, a group of recipients, or all recipients connected to the system. Remote player devices **110** may periodically check for new messages in the system and process them.

[0090] According to one embodiment of the invention, gaming devices **160** may send and receive data over public and/or private instant messaging systems. The message body of any particular message may vary, using a proprietary or non-proprietary format, and may be encrypted or in human-readable format. Messages may be sent at a time determined by the message originator, typically, but not exclusively, in response to an event. The recipient of the message may be any device capable of consuming the message. Both the gaming device **160** and the message recipient may queue incoming and outgoing messages. Queuing messages permits devices involved in instant message communications to accept new messages while processing received messages and to generate outgoing messages for delivery as system resources permit.

[0091] In another embodiment according to the invention, devices may send and receive data over public and/or private email-type messaging systems. The message body of any particular message may vary, using a proprietary or non-proprietary format, and may be encrypted or in human-readable format. Messages may be sent at a time determined by the message originator, typically, but not exclusively, in response to an event. The recipient of the message may be any device capable of consuming the message. The message recipient may be responsible for checking the prescribed message storage area for messages addressed to it. The message recipient may reply to a received message or may generate a new message to a specific recipient, a group of recipients, or all recipients connected to the system. Gaming system devices **110** and **160** may periodically check for new messages in the system and process them.

[0092] Embodiments according to the invention may present promotional messages during remote play sessions. Messages sent may comprise instant messages for promotional information, notification of events, or other pieces of information that can be communicated electronically. Promotional messages may also include jackpot and bonus information. A promotional message server may be used to construct and send promotional messages. In one embodiment, a computer server, comprising a central gaming controller **180**, may also comprise the promotional message server.

[0093] A user interface may be provided to construct message templates. These templates are then used to construct a deliverable message. Embodiments of a message template may comprise a timeout value that indicates how long the message is to be displayed, the frequency with which the message displays in relationship to other scheduled messages, a limitation value that prevents the message from being displayed too often and an expiration date after which the message is no longer used in the system. Custom graphics and display modes may also be specified for a message template, such as icons, animations, and various scrolling methods.

[0094] A remote player device **110** may present a promotional message for an amount of time determined from the contents of the promotional message. The promotional message may be presented to a user in conjunction with gaming information. The presentation may contain icons, animations, and various scrolling methods. In addition multimedia such as sound and video may be utilized.

[0095] The promotional message server may also provide a dynamic data insertion function to insert player information such as the player's name or birthday into a message prior to delivery. Dynamic data insertion may be accomplished through the use of specialized tags within the message body. When encountered, the tag characters within the message are replaced with data from a related data source. The specific tag's character sequence is associated with a specific subset of the data in the data source, such as a player's name in a data source of player information. Processing comprises reading the data source and its subsets, parsing the specialized tags from the message template, indexing the data source and replacing the tag characters with data from the data source to create a deliverable message for each item in the data source. This sequence continues until all the data in the data source has been included in messages. The messages may be delivered as they are created or queued until all items in the data source have been used to create messages, then all messages may be sent at the same time.

[0096] In one embodiment, a gaming system **100** may comprise a card reader installed in a gaming device **280** or remote player device **380**. Promotional messages may be based on information obtained about a player that is either stored on a card inserted into the card reader or by using identifying information from the card to access the casino's proprietary database systems **170**.

[0097] One embodiment of the promotional message server may also provide a dynamic grouping function in which a subset of players currently gaming is selected and collected into a group. Casino operators may address a message template to this dynamic subset of current players and send a specific message or messages exclusively to that subset. These messages may be constructed using the dynamic data function. The dynamic grouping function may use criteria specified by the casino and available in the casino's proprietary database systems **170** and criteria generated by live gaming activity to establish a profile that players must meet to be selected. The criteria may comprise loyalty points the player has earned, a player's birthday, length of current gaming session, or other data that is collected by the casino on players and gaming activity.

[0098] The dynamic grouping function may be scheduled to run at time intervals determined by the casino. Each time the interval is reached the promotional gaming server searches for current players that meet the established criteria and builds a dynamic group then sends the assigned message to that group of players exclusively. The gaming devices **160**, remote player device **110**, card readers installed in gaming devices **280** and remote player device **380**, and casino pro-

prietary database systems **170** may provide data to search for players that meet the specified criteria and assemble them into a dynamic group.

[0099] In one embodiment of the invention, the casino may advertise a casino sponsored event. The casino may use a user interface display to construct the message and schedule its delivery start time, duration of the message e.g. number of hours, days, weeks, or months that the message will run, and specific values that weight the message's delivery interval and frequency amongst other promotional messages scheduled in the system. The style of message may also be specified, including but not limited to flashing, scrolling, scroll direction, and the use of custom graphics. The casino operator may also specify the criteria players must meet to receive the message. Once the casino operator accepts the promotional message configuration, the promotional message server may deliver the message across a network to remote player devices **110** or host gaming systems **160**.

[0100] An embodiment of a gaming system **100** may provide for the electronic transfer of funds to a gaming device for the purpose of making wagers. When a player chooses a gaming device **160** to play remotely, funds are electronically transferred to the gaming device and appear as credits on the gaming device **160**. The player then uses those credits to make wagers on game outcome. When the player is finished, the system transfers any remaining credits on the gaming device back to the source of funds or to an alternate storage. Limitations on the amount of funds transferred may be set for a minimum or maximum amount transferred, a minimum or maximum amount transferred within a given time period, or a minimum or maximum amount transferred for the life of the account, or a combination of any of these. The limitation may also vary between accounts, permitting one account to have a different limitation on transfers than another. When the limitation set is reached, further transactions are prevented until the limitation is resolved. The limitation may be set voluntarily by the player, by the casino, or by a gaming authority. Limitations may be set for all players within a specific jurisdiction or for selected players only. The source of funds used by a player for remote access play may be maintained in a database located on a computer that is directly or indirectly connected to the casino network **150**.

[0101] FIG. **6** is a flowchart depicting an embodiment of the invention whereby a player transfers funds from a bank account to a player account for the purpose of wagering on games. Depending on the embodiment, additional steps may be added, others removed, steps merged, or the order of the steps rearranged. Starting at step **601**, a remote player device **110** initiates an electronic funds transfer. Continuing to step **605**, the central gaming controller **180** verifies the remote players banking information. Next at step **610**, if the banking information is valid, control transfers to step **620**, otherwise control moves to step **615**. Continuing at step **620**, the remote player device **110** prompts the player to enter the amount of the transfer. Moving to step **615**, the central gaming controller **180** verifies fund availability. Next at step **630**, if funds are not available control moves to step **615**. Otherwise, control moves to step **635**, where, in a one embodiment, the central gaming controller **180** may consult a casino database **170** and determine whether the remote players total gaming activity exceed limits placed on that activity. Next at step **640**, if the limit is reached control moves to step **615**. Otherwise, continuing at step **645**, the transfer is completed. Returning to step **615**, if the players banking information is not correct, funds are not available or a transfer limit is reached, then the transaction is canceled and control transferred to the end state.

[0102] An embodiment of a gaming system **100** may record the interaction between remote players and host gaming devices **160** during remote gaming sessions for the purpose of resuming games in-progress after a communications failure. If at anytime the connection between the remote player and a gaming device becomes unavailable, the system has a sufficient record of player positions to restart the game as at the time just prior to the failure. Thus an embodiment of a gaming system may record, transfer, and reinstate on a like device an encrypted block of data representing the precise state of a particular gaming device **160** at the time that the data block is requested. The encrypted block of data is generated by the gaming device **160** and transferred using a communication protocol. The encrypted block of data may be used to continue a game in-progress that was interrupted by a gaming device **160** failure or other system failure. In addition, the payer's wager and credit data along with gaming payout data may be included in the data block. The data may also be transported to another gaming device **160** for the purpose of completing an interrupted game or resuming a gaming session. The destination gaming device **160** receives the encrypted block of data, decrypts it, and loads the game state into its own systems, allowing a game in-progress to complete or a game session to continue.

[0103] FIG. **8** is a flowchart depicting a method for a gaming device **160** to build and deliver an encrypted block of data representing the complete state of the gaming device. Depending on the embodiment, additional steps may be added, others removed, steps merged, or the order of the steps rearranged. Starting at **805**, a central gaming controller **180** sends a message to a host gaming device **160** to initiate the build of the encrypted data block. Continuing to step **10**, the gaming device responds with an acknowledgement. Next, at step **815**, the gaming device **160** begins the build process. When finished with the build and encryption process, at step **820**, the gaming device saves the data block to non-volatile memory in the gaming device. Continuing to step **825**, the gaming device **160** sets an indication that may be queried by the central gaming controller **180** as to the status of the build/encryption process. Moving to step **830**, the central gaming controller **180** checks the gaming device's status. Next at step **835**, if the build/encryption process is complete, control continues to step **840**, otherwise control returns to step **830**. Moving to step **840**, the central gaming controller **180** retrieves the data block from the gaming device **160**. Next, at step **845**, when the central gaming controller **180** has retrieved the data block it saves the data block to a database. Continuing to step **850**, the central gaming controller then checks the validity of the saved data block. If the data block is not verified then the central gaming controller initiates another retrieval by returning control to step **840**.

[0104] FIG. **9** is a flowchart depicting a method for retrieving an encrypted block of data representing the state of a gaming device from a database and loading the encrypted block into a gaming device. Depending on the embodiment, additional steps may be added, others removed, steps merged, or the order of the steps rearranged. Starting at step **905**, the central gaming controller **180** retrieves a saved encrypted data block from the database. Next at **910**, the controller **180** verifies the integrity of the data block. Continuing to **915**, if the data block is verified, control continues to step **925**, if not

control moves to step **920**. Returning to the flow of control at **925**, the central gaming controller **180** notifies a target gaming device **160** of an intent to upload the data block. Next, at step **930**, the target gaming device **160** responds with a message indicating whether it is available for the upload. Moving to step **935**, if the target device is ready control moves to step **940**, if not control is diverted to step **920**. Returning back to step **940**, the encrypted data block is uploaded to the target gaming device **160**. Next at step **945**, the target gaming device **160** verifies the encrypted data block. Moving on to step **950**, if the data block was verified, the gaming device moves on to step **955**, if not verified, control moves to step **920**. Continuing on to step **955**, the gaming device **160** initializes its state to the new state defined by the received data block and the process moves to the end state. Returning back to step **920**, which is reached on error conditions, an error log entry is generated and the requesting process notified.

[0105] FIG. **10** is a block diagram depicting one embodiment of a gaming system according to the present invention wherein the host gaming devices **160** are available for remote play over a network that connects to a cable modem termination system. The cable modem termination system **1005** is located at the head-end of a cable television provider who makes broadband network connectivity available as a service to its customers. Cable television customers who subscribe to broadband or digital television services access the remote network **120** through a digital home communications terminal (DHCT) **1000**. The remote player device **110** may be a stand-alone cable modem or a set-top box that includes a cable modem and a digital television broadcast decoder. The DHCT **1000** may, in some embodiments include the remote player device **110**. The remote player interface **300** may be any device or combination of devices that remote players operate to interact with the remote player device **110**, for example, a television with remote control or a personal computer. To connect to the central gaming controller **180**, a remote player uses the remote player device **110** to send messages, using, in one embodiment, IP datagrams, through the DHCT and the cable modem termination system **1005**. The cable modem termination system **1005** uses a network router **1004** to route the IP datagrams over a network connection **140** to the central gaming controller **180**. The backbone network connection **140** can be any type of network connection such as a dedicated Ti or fiber optic over which network traffic can be exchanged. In preferred embodiments the backbone network **140** is part of a closed loop network. However, in other embodiments, a public network such as the Internet may form at least a portion of the backbone network. Encryption of the data may be performed, either at the endpoints such as remote player device **110**, at a host gaming device **160**, at a central gaming controller **180**, over network **120**, or only over network **140**.

[0106] Network traffic from the remote network **120** and backbone network **140** travels over a number of virtual local area networks (VLAN) configured using a multilayer network switch **1022**. Segmenting the internal network into VLANs creates security zones whereby only permitted network traffic appears on a given VLAN.

[0107] IP datagrams are received over the backbone network **140** through network router **1020** and firewall **1021**. Network router **1020** filters IP datagrams that are not coded with the configured port for access to the gaming network **150**. If an IP datagram passes the network router **1020** it then must pass the firewall **1021** in order for the IP datagram to be processed by the request processing server(s) **1023** which comprise a portion of a central gaming controller **180** in this embodiment.

[0108] The firewall **1021** has two network interfaces **1050**, **1051**; the external-facing network interface **1050** is connected to the router **1020** and the internal-facing network interface **1051** is connected to the multilayer network switch **1022**. In this configuration the firewall **1021** acts as a type of network switch that may perform additional security checks on the IP datagram, then move the datagram to the internal-facing network interface **1051** where the multilayer network switch **1022** moves the datagram to the VLAN where request processing server(s) **1023** are located.

[0109] Each request processing server **1023** has two network interfaces **1052**, **1053**, both connected to the multilayer network switch **1022**. Each network interface **1052**, **1053** may be configured on a different VLAN of the multilayer network switch **1022**. The multilayer network switch **1022** moves IP datagrams between the firewalls **1021** internal-facing network interface **1051** and the request processing server(s) **1023** external-facing network interface **1052**. This embodiment provides a layer of protection for the host gaming devices **160** in the event that the request processing server (s) **1023** are compromised.

[0110] When an IP datagram arrives at a request processing servers **1023** external-facing network interface **1052**, the request processing server **1023** interprets the IP datagram and issues commands over its internal-facing network interface **1053** to the application server **1027**. The request processing server **1023** may reject invalid commands or make other determinations as to the appropriateness of a request that prevent the request from being passed on to the application server **1027**. Likewise, the request processing server **1023** may request data from the application server for use in building its own response to the request, which may or may not require an acknowledgement from the remote player device **110** as described below.

[0111] Command messages received by the application server **1027** may be recorded in a database using the database server **1025**. The application server **1027** then executes the command, which may include any function relevant to the operation of the host gaming device **160** and may or may not return data to the request processing server **1023** for delivery to the remote access player. In one embodiment, the database server **1025** may comprise the casino database **170**. In other embodiments the database server **1025** and the application server **1027** may comprise the casino database **170**.

[0112] Some commands may require the remote player device **110** to acknowledge the receipt of information sent from the central gaming controller **180**. For commands that require acknowledgement, the central gaming controller **180** queues the status of the messages that are sent to the remote player device **110**. The status of messages sent but not acknowledged is stored in a database as "open" using the database server **1025**. When the remote player device **110** receives the message it sends an acknowledgment message back to the central gaming controller, which in turn marks the message in the database as "closed"; indicating that the message has reached its destination and has been acknowledged. If the message is not acknowledged within a specified timeout, the message is resent. FIG. **4** depicts the sequence of events for the receipt, queuing and response loop for qualifying messages.

[0113] Recording of messages between the remote player device **110** and a host gaming device **160** by the central gaming controller **180** allows each game or transaction, on both the host gaming device **160** and remote player device **110**, to be recorded. This allows each host gaming device or remote player device to be individually auditable using standard accounting practices in the gaming jurisdiction where the game is located. In one embodiment, a third party, such as a gaming authority may be sent the records of games and transactions online by the gaming system **100**.

[0114] When the application server **1027** receives a command request that requires communication with gaming devices **160**, **161**, **162** it connects to those devices using terminal server **1035**. Terminal server **1035** provides Ethernet connectivity to the RS232 serial interface **1054** of the game. Through that interface the remote player device **110** communicates to the gaming devices **160**, **161**, **162** using a communications protocol supplied by the gaming machine manufacturer. The protocol includes commands that permit the remote operation of the gaming devices **160**, **161**, **162** and the reporting of game results so that the application server **1027** can control remote play.

[0115] FIG. **11** depicts a more detailed network diagram of one embodiment of network **150** and elements of a gaming system **100** connected to network **150**. This includes a host gaming device **160**, and a database **160**. As in the embodiment of FIG. **10**, a central gaming controller **180** may be comprised of request processing servers **1027** and an application server **1023** connected to one or more VLANs of network **150**.

[0116] While the above detailed description has shown, described, and pointed out novel features of the invention as applied to various embodiments, it will be understood that various omissions, substitutions, and changes in the form and details of the device or process illustrated may be made by those skilled in the art without departing from the spirit of the invention. The scope of the invention is indicated by the appended claims rather than by the foregoing description. All changes which come within the meaning and range of equivalency of the claims are to be embraced within their scope.

What is claimed is:

1. A gaming system, comprising:
a network;
at least two servers, each of the at least two servers coupled to the network; and
at least one gaming machine coupled to the communication network, the at least one gaming machine configured to transmit transaction data to each of the at least two servers.

2. The gaming system of claim **1**, wherein each of the at least two servers is configured to transmit an acknowledgement of the receipt of the transaction data to the gaming machine.

3. The gaming system of claim **1**, where the at least two servers are located in different geographic locations.

4. The gaming system of claim **1**, wherein the gaming machine and the at least two servers operate a gaming session.

5. The gaming system of claim **3**, wherein the gaming machine and one of the servers continues operating the gaming session if the other server is disabled.

6. The gaming system of claim **1**, wherein the transaction data is encrypted using a plurality of private keys.

7. The gaming system of claim **6**, wherein the plurality of private keys are symmetric keys.

8. The gaming system of claim **1**, wherein the transaction data is encrypted using a plurality of asymmetric keys.

9. The gaming system of claim **8**, wherein the asymmetric keys comprise at least one public key and at least one private key.

10. A gaming system, comprising:
a network;
at least two servers, each of the at least two servers coupled to the network, each server comprising:
means for receiving transaction data;
means for processing transaction data; and
at least one gaming machine coupled to the communication network, the at least one gaming machine comprising:
means for transmitting transaction data, wherein the transaction data is transmitted to each of the at least two servers.

11. The gaming system of claim **10**, wherein each of the at least two servers is configured to transmit an acknowledgement of the receipt of the transaction data to the gaming machine.

12. The gaming system of claim **10**, where the at least two servers are located in different geographic locations.

13. The gaming system of claim **10**, wherein the gaming machine and the at least two servers operate a gaming session.

14. The gaming system of claim **13**, wherein the gaming machine and one of the servers continues operating the gaming session if the other server is disabled.

15. The gaming system of claim **10**, wherein the transaction data is encrypted using a plurality of private keys.

16. The gaming system of claim **15**, wherein the plurality of private keys are symmetric keys.

17. The gaming system of claim **10**, wherein the transaction data is encrypted using a plurality of asymmetric keys.

18. The gaming system of claim **17**, wherein the asymmetric keys comprise at least one public key and at least one private key.

19. A method for a gaming system comprising:
operating a game session between a gaming machine, a first and a second server;
processing user input;
generating transaction data based on the user input; and
transmitting the transaction data to at least two servers.

20. The method of claim **19**, wherein each of the at least two servers is configured to transmit an acknowledgement of the receipt of the transaction data to the gaming machine.

21. The method of claim **19**, where the at least two servers are located in different geographic locations.

22. The method of claim **19**, wherein the gaming machine and one of the servers continues operating the gaming session if the other server is disabled.

23. The method of claim **19**, wherein the transaction data is encrypted using a plurality of private keys.

24. The method of claim **23**, wherein the plurality of private keys are symmetric keys.

25. The method of claim **19**, wherein the transaction data is encrypted using a plurality of asymmetric keys.

26. The method of claim **24**, wherein the asymmetric keys comprise at least one public key and at least one private key.

* * * * *