Sept. 5, 1933. H. L. COMPTON 1,925,951

BOTTLE CAPPING MACHINE FEEDING ATTACHMENT

Filed Jan. 11, 1932

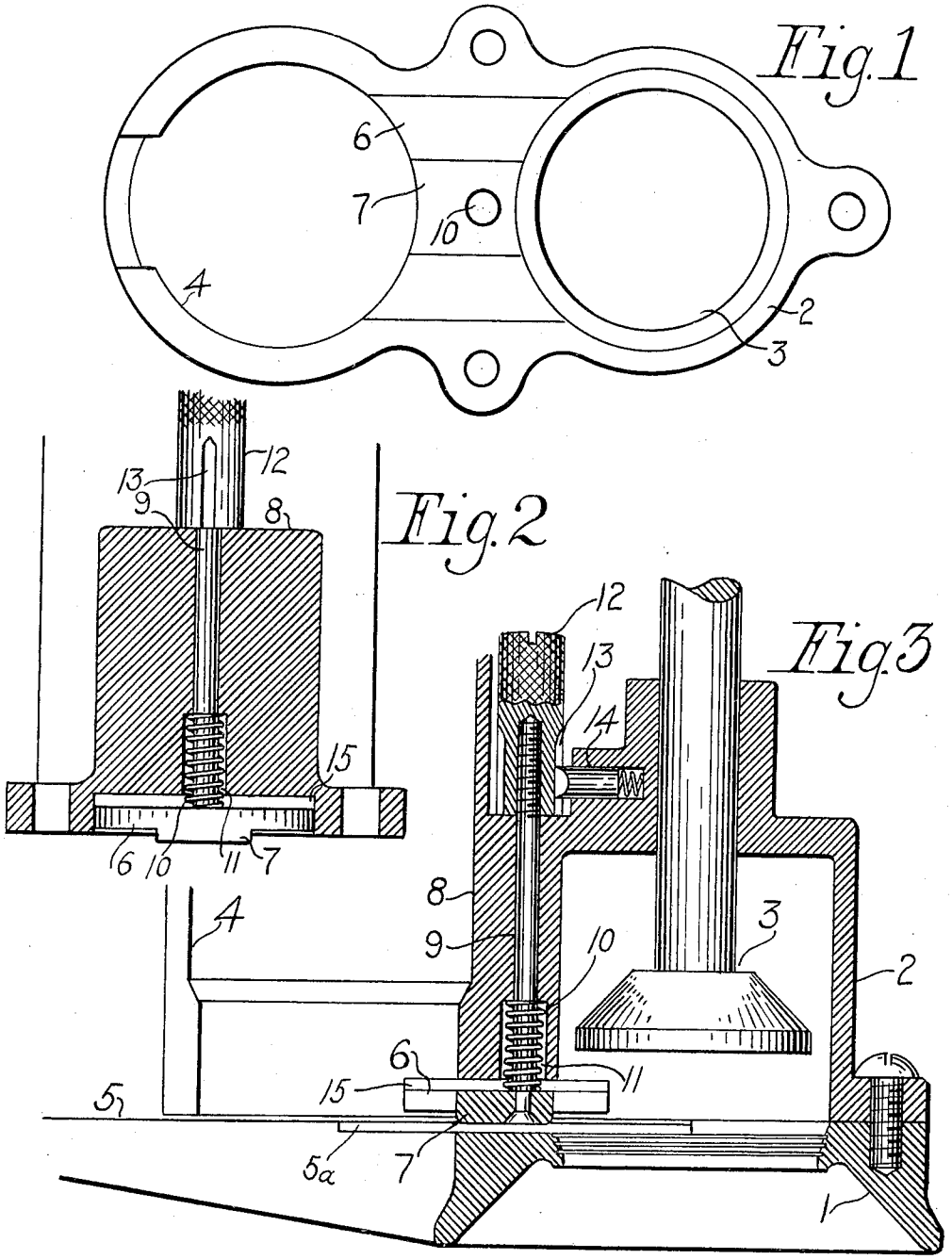

Inventor

Harry L. Compton,

By Edwin Guthrie,

Attorney

Patented Sept. 5, 1933 1,925,951

UNITED STATES PATENT OFFICE

1,925,951

BOTTLE CAPPING MACHINE FEEDING ATTACHMENT

Harry L. Compton, Washington, D. C., assignor to American Dairy Supply Company, Washington, D. C.

Application January 11, 1932. Serial No. 586,006

7 Claims. (Cl. 226—92)

This invention relates to attachments for capping machines constructed to apply the common paper board disks to the mouths of milk bottles as closures therefor.

Milk bottle caps in common use vary somewhat in form and materials. In some instances the disks are plain circular flat pieces of paper board without attachments of any kind. Others are provided with modified edge portions, or projecting edge extensions, and still others carry tabs ordinarily secured to the disks by staples, the tab being included to enable the user of the milk to withdraw the disk. The tabs may be placed upon the surface of the disks, or in cavities sunken in the disks. As commonly manufactured the staple or staples project more or less above and below the disks. Whatever the cap structure and the slight variations of thickness incidentally occurring, it is the object of this invention to produce an attachment for standard capping machines that will continuously and repeatedly feed caps one at a time to the plunger chamber of the machine without interruption or jamming and destruction of any caps as the operation proceeds. To accomplish the object stated this invention consists in a special construction comprising a spring pressed plate disposed in the common wall between the cap magazine chamber and the plunger chamber and controlled by a combination of graduated devices adapted for adjusting the plate to suit the thickness of the caps to be fed.

The preferred construction is illustrated in the accompanying drawing, of which Fig. 1 represents a bottom view of the chambers and common wall between them, and shows the shape of the movable plate. Fig. 2 is a vertical sectional view through the wall. Fig. 3 is a vertical section of the chambers and the base thereof forming part of the machine.

Throughout the drawing and description the same number is used to refer to the same part.

The milk bottle is received in the conical entrance 1 of the portion of the machine that supports the plunger chamber 2, having the usual plunger 3, a cap magazine chamber 4, and a slideway 5 upon which the caps are fed in the ordinary manner. The depression 5*a* is intended to take care of any projection of the wire staples below the disks.

The bottom portion of the wall between the chambers includes the movable plate 6 having a middle part 7 extending downwardly below the remaining surface of the plate. The wall 8 between the chambers encloses movably a vertical rod 9, and at the bottom of the wall in an extension recess 10 is located a coil spring 11 encircling the lower end of the rod which is as shown secured to the middle of the plate 6. The upper end of the rod is screw threaded and engaged by a thumb nut 12, which has spaced vertical grooves 13 arranged to be engaged by a spring pin 14. Thus the positions into which the nut may be turned are graduated.

In operation, plate 6 being suitably raised or lowered in its adjustment in the recess 15 by means of the thumb nut, caps of a particular thickness will be served one at a time under the plate 6 and its downward extension 7. But, if a cap is fed a trifle thicker or with the wire staple projecting unduly, the plate rises in the recess 15 and the thicker cap passes without incident. The parts described are constructed to take care of variations such as described in the usual course of capping bottles in numerous succession and as determined by practical experience with capping machines generally.

This invention is not intended to be confined to any precise size or shape of the elements set forth.

Having now described the invention and its use, I claim:—

1. In a capping machine attachment, the combination with a cylindrical cap magazine chamber, of a cylindrical plunger chamber, the said chambers having a common vertical wall between them, a recess formed at the bottom of said wall and having curved sides in correspondence with the cylindrical interior surfaces of said chambers, a plate movably fitting the said recess, a rod secured to the plate and extending movably upward in the said wall, said recess having an upward extension in said wall, a coil spring encircling said rod in said extension of the recess and acting to press said plate downwardly, and graduated devices for moving the rod vertically against the force of the spring.

2. In a capping machine attachment, the combination with a cylindrical cap magazine chamber, of a cylindrical plunger chamber, the said chambers having a common vertical wall between them, a recess at the bottom of said wall having side edges concave in form corresponding with the interior cylindrical surfaces of said chambers, a plate movably fitting said recess and thereby held against displacement horizontally, a rod secured to the middle of said plate and extending movably upward in said wall, said bottom recess having an upward extension, a coil spring encircling the lower end of the said rod in said

extension of the recess whereby the said plate is pressed downwardly, and graduated adjusting devices acting upon the upper end of the rod against the force of the said spring.

3. In a capping machine attachment, the combination with a cylindrical cap magazine chamber, of a cylindrical plunger chamber, the said chambers having a common vertical wall between them, a recess formed at the bottom of said wall and having curved sides in correspondence with the cylindrical interior surfaces of said chambers, a plate movably fitting the said recess, said plate having a downwardly extending portion, a rod secured to the plate and extending movably upward in the said wall, said recess having an upward extension in said wall, a coil spring encircling the said rod in said extension of the recess and acting to press said plate downwardly, and graduated devices for moving the rod vertically against the force of the spring.

4. In a capping machine attachment, the combination with a cylindrical cap magazine chamber, of a cylindrical plunger chamber, the said chambers having a common vertical wall between them, a recess formed at the bottom of said wall and having curved sides in correspondence with the cylindrical interior surfaces of said chambers, a plate movably fitting the said recess, the said plate having its middle portion provided with an extension downwardly, a rod secured to the plate and movable up and down in the said wall, said recess having an upward extension in said wall, a coil spring encircling the said rod in the extension of said recess and acting to press said plate downwardly, and graduated devices for moving the rod vertically against the force of the spring.

5. In a capping machine attachment, the combination with a cylindrical cap magazine chamber, of a cylindrical plunger chamber, the said chambers having a common vertical wall between them, a recess formed at the bottom of said wall and having curved sides in correspondence with the cylindrical interior surfaces of said chambers, a plate movably fitting the said recess, the said plate having its middle portion provided with an extension downwardly, a rod secured to the said middle portion of the plate and extending movably upward in the said wall, said recess having an upward extension in the said wall, a coil spring encircling the said rod in the said extension of the recess and acting to press the plate downwardly, and graduated devices for moving the rod vertically against the force of the spring.

6. In a capping machine attachment, the combination with a cylindrical cap magazine chamber, of a cylindrical plunger chamber, the said chambers having a common vertical wall between them, a recess formed at the bottom of said wall and having curved sides in correspondence with the cylindrical interior surfaces of said chambers, a plate movably fitting the said recess, a rod secured to the plate and extending movably upward in said wall, a coil spring encircling the rod in said extension of the recess and acting to press the plate downwardly, the upper end of said rod being screw threaded and projecting above said wall, a thumb nut engaging the threaded end of the rod to move the rod vertically against the force of the spring, said nut having spaced notches, and a spring pin arranged to engage the said notches individually when the nut is turned.

7. In a capping machine attachment, the combination with a cap magazine and a plunger chamber having a common wall between them, said wall having a vertical cavity at the bottom opening downwardly, a coil spring in said cavity, a bolt movable lengthwise within said cavity and spring, and a member extending below said cavity and adjustable by the movements of the bolt, said member being constantly pressed downwardly by said spring.

HARRY L. COMPTON.