Jan. 24, 1939. H. ROCHOW 2,144,936

ARRANGEMENT FOR ELECTRIC INTERCOMMUNICATION

Filed April 18, 1935

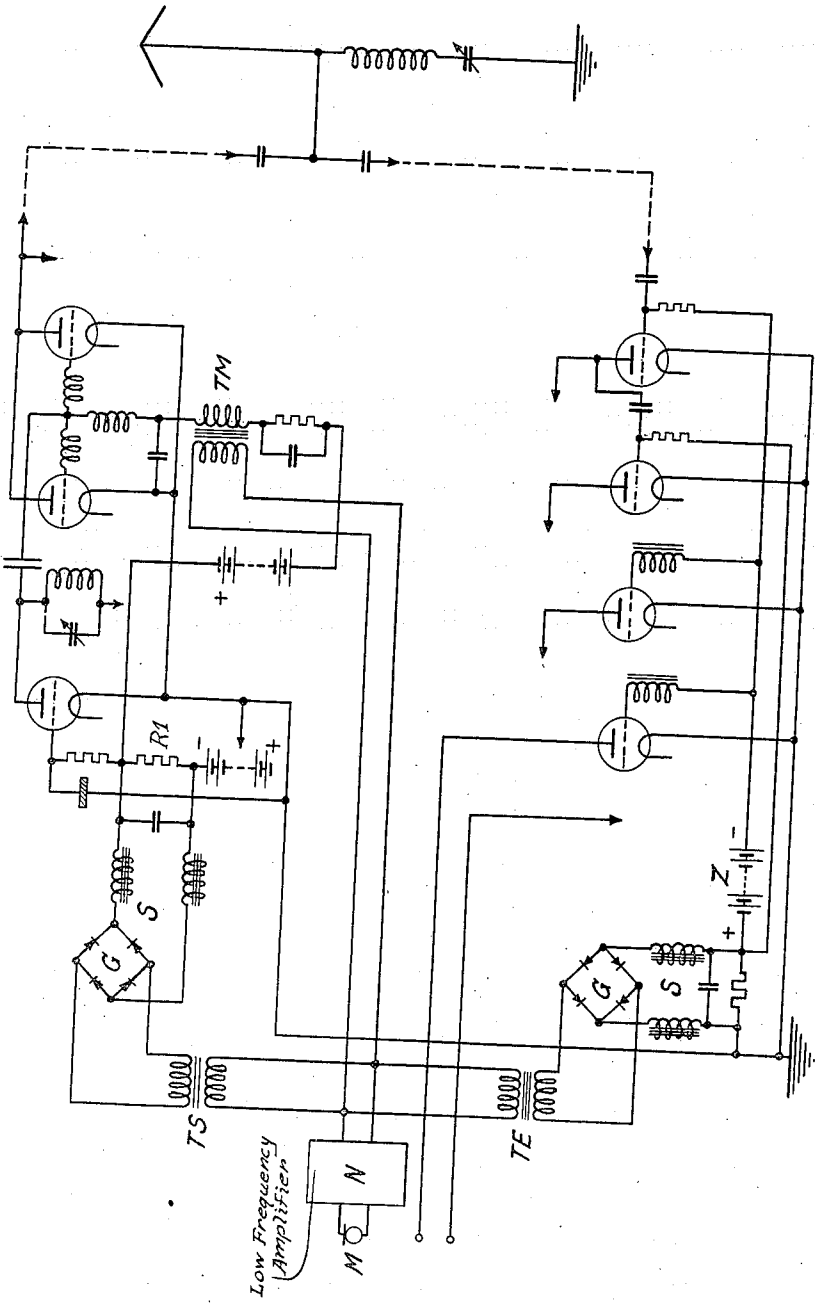

Inventor:
Hans Rochow
by R.C. Hopgood
Attorney

Patented Jan. 24, 1939

2,144,936

UNITED STATES PATENT OFFICE

2,144,936

ARRANGEMENT FOR ELECTRIC INTERCOMMUNICATION

Hans Rochow, Berlin-Tempelhof, Germany, assignor to C. Lorenz Aktiengesellschaft, Berlin-Tempelhof, Germany, a company

Application April 18, 1935, Serial No. 16,973
In Germany April 25, 1934

1 Claim. (Cl. 250—13)

The invention is concerned with a circuit arrangement for electric intercommunication between two stations. It is well known to provide for such purposes a switching device which is operated manually and in such a manner that at each station the receiver is rendered inactive when the transmitter is cut in. If the direction of intercommunication is changed, then at both stations the switching must be effected manually. It has also been suggested to so improve these arrangements that the switching is made with the aid of relays which are controlled by speech, i. e. the arrangement of relays is such that the receiver of the station just speaking is switched by a relay energized by the speaking currents over an amplifier. Arrangements of this kind have the disadvantage however that the relays must be very sensitive and accurately adjusted in order to ensure a good intercommunication. In addition the relays must be slow releasing in order not to become deenergized during the short pauses intervening between the individual words. This on the other hand however entails the disadvantage that at the beginning of the speech certain parts thereof are cut off by the relays, unless very complicated arrangements are employed, i. e. arrangements, which are not adapted for use with apparatus required to be as light as possible.

The invention solves the problem by deriving from the speech currents a continuous current which by displacing the grid potential acts to start the transmitter and to stop the receiver.

The invention will be understood from the following description and be particularly pointed out in the appended claim, reference being had to the accompanying drawing which is a diagrammatic representation of an embodiment of the invention.

The microphone M is included in the input circuit of a low frequency amplifier N. The output circuit of the low frequency amplifier is connected with two transformers TS and TE. In the secondary circuits of these transformers bridge connections of the Graetz type are disposed which contain dry rectifiers of a well known kind. The rectified currents are passed over filter circuits S in order to control the transmitter and receiver. The connection is such that the continuous currents shall produce in the transmitter and receiver actions which are the reverse of each other. The transmitter when voice-actuated is so biased that the controlling transmitter which is quartz controlled, does not oscillate. By the influence of speech a continuous voltage is applied over resistance R1 to the controlling transmitter, this voltage being such that this transmitter will be caused to oscillate and to control the final stage working in push-pull manner. An action exactly the reverse of this is produced in the receiver. The continuous voltage renders the bias of the receiver negative so that the receiver will be insensitive. This is attained by leading the continuous voltage to the resistance R2. Resistance R2 is included in the grid circuit of all the stages. The high frequency stage and the two low frequency stages are however additionally biased by a battery Z, i. e. biased negatively, whilst the grid of the audion is connected directly to the resistance. When the arrangement is subjected to speech, the whole level of the receiver gets displaced. The output circuit of the low frequency amplifier N is connected not only with the transformers TS and TE but also with a transformer TM, i. e. the modulation transformer of the transmitter. Here the final stage is modulated in a well known manner with the aid of the method of modulating grid potentials.

The additional current consumption for the controlling arrangement according to the invention is very small. The arrangement may for example be such that the resistances R1, R2 each require a current of 5 ma.

What is claimed is:

A two-way radio telephone station comprising a radio transmitter including a three-element vacuum tube having grid biasing means for normally preventing operation of said transmitter, a radio receiver including a three-element vacuum tube having grid biasing means normally rendering said receiver operative, a connection between said vacuum tubes for maintaining the cathode elements of said tubes at the same potential, a source of low frequency currents for modulating said transmitter, and means including separate rectifier elements having their output circuits directly connected respectively to said vacuum tubes for supplying direct current from said low frequency current source to vary the biasing voltages of said vacuum tubes to render said transmitter operative and to render said receiver inoperative.

HANS ROCHOW.