(No Model.)

F. VIERING.

RAILROAD SWITCH LOCK.

No. 505,804. Patented Sept. 26, 1893.

Fig. 1.

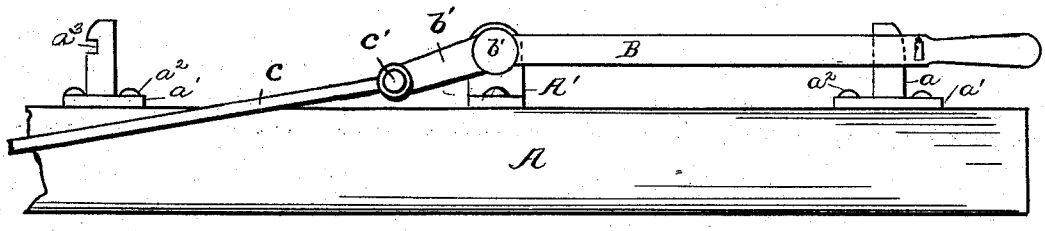

Fig. 2

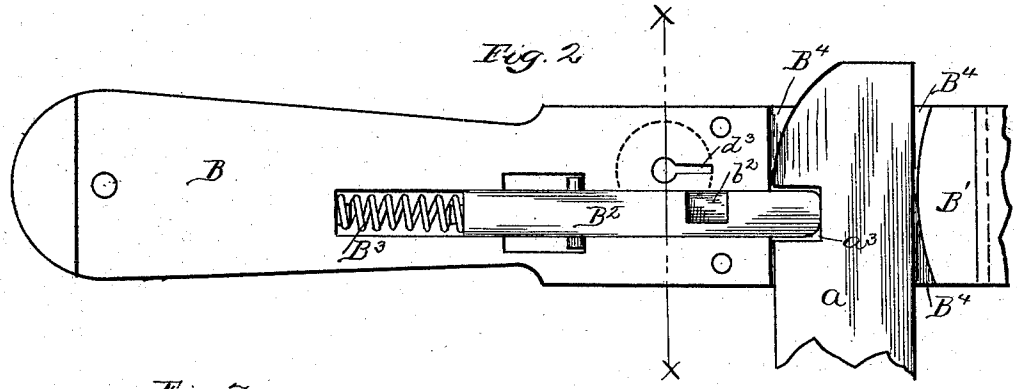

Fig. 3

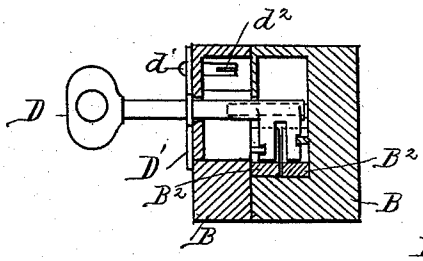

Fig. 4.

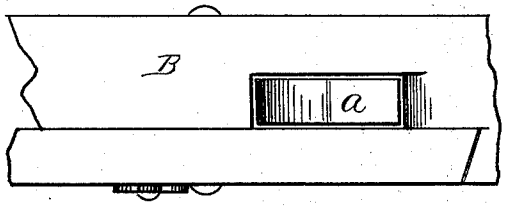

Fig. 5.

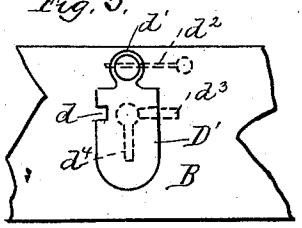

Witnesses:

H. E. Harrison.

John. D. Allan

Inventor.

Frederick Viering

by J. H. Stevenson

Atty

UNITED STATES PATENT OFFICE.

FREDERICK VIERING, OF ALLEGHENY, PENNSYLVANIA.

RAILROAD-SWITCH LOCK.

SPECIFICATION forming part of Letters Patent No. 505,804, dated September 26, 1893.

Application filed May 19, 1892. Serial No. 433,597. (No model.)

To all whom it may concern:

Be it known that I, FREDERICK VIERING, a citizen of the United States, residing at Allegheny, in the county of Allegheny and State of Pennsylvania, have invented certain new and useful Improvements in Railroad-Switch Locks; and I do declare the following to be a full, clear, and exact description of the invention, such as will enable others skilled in the art to which it appertains to make and use the same, reference being had to the accompanying drawings, and to the letters of reference marked thereon, which form a part of this specification.

My invention relates to improvements in railroad switch locks and the object is the provision of a simple, durable and inexpensive device which will be practical and efficient for the intended purpose.

The invention consists of a switch lock embodying novel features of construction and combination of parts as disclosed herein.

In the accompanying drawings Figure 1 is a full length side view of my switch lock shown in position on a railroad tie. Fig. 2 is a plan view of my invention. Fig. 3 is a cross sectional view taken on line *x x* of Fig. 2. Fig. 4 is a top sectional view of the lock proper, and Fig. 5 is a side view showing the key guard, &c.

A represents a rail tie.

"*a*" "*a*" are the lock posts each one having notches "a^3".

"*a'*" is a base plate for the post "*a*," and it is secured to the tie A by bolts "a^2."

A' is the pivot post for the lever B. This lever B has a short arm *b'* to operate the switch rod C, the latter being secured to the arm *b'* at *c'*. The lever B contains near the handle end my locking device which consists of one or more bolts B^2, and a spring or springs B^3. This rod B^2 is operated by a key D.

D' is the key hole escutcheon and is pivoted at *d'* and has a locking notch *d* to lock the key when it is desired to hold the bolt B^2 back to prevent locking. This is frequently desired when there are several trains to switch at a time and it will be readily seen that the switchman can in this way be relieved from opening the lock by the key, if the bolt is held back as aforesaid. This locking is accomplished by the shank of the key entering the notch *d* and being held in place by a constant pressure of the escutcheon against the key shank by means of the spring d^2. To get the key D into my locking device it first enters the key way d^4 when it is turned quarter round and then enters the second way d^3.

From the drawings and description the operation of my switch lock will be easily understood and I will simply state that the lever is connected by the short arm with the switch rod and by moving the lever from post to post the switch is operated and is locked in the required position by the spring locking bar engaging the notch on either post and the bar is secured rigid by the locking devices, as is evident.

Having thus described my invention, what I claim and desire to secure by Letters Patent of the United States is—

In a switch lock, the combination of the lock posts, the lever pivoted between the posts and having a recess to receive the posts, the switch or shifting rod connected to the lever, the slot in the lever and the bolt arranged in and movable in said slot, the spring acting on said bolt, the pivoted key hole escutcheon having the locking notch, the key ways at right angles to each other, the key adapted to enter the ways as described, and operating on the sliding bolt, and the spring for holding the key, all as described.

In testimony whereof I affix my signature in presence of two witnesses.

FREDERICK VIERING.

Witnesses:

JOHN H. CRATTY,

W. P. RAPP.