(19) Europäisches Patentamt
European Patent Office
Office européen des brevets

(11) EP 4 036 307 A1

(12) EUROPEAN PATENT APPLICATION

(43) Date of publication:
03.08.2022 Bulletin 2022/31

(21) Application number: **22154829.0**

(22) Date of filing: **02.02.2022**

(51) International Patent Classification (IPC):
D21J 3/00 *(2006.01)*

(52) Cooperative Patent Classification (CPC):
D21J 3/00

(84) Designated Contracting States:
AL AT BE BG CH CY CZ DE DK EE ES FI FR GB GR HR HU IE IS IT LI LT LU LV MC MK MT NL NO PL PT RO RS SE SI SK SM TR
Designated Extension States:
BA ME
Designated Validation States:
KH MA MD TN

(30) Priority: **02.02.2021 EP 21154700**

(71) Applicant: **Organic Disposables sp. z o.o.**
04-953 Warszawa (PL)

(72) Inventors:
- **Brzyski, Rafal**
  05-077 Warszawa (PL)
- **Ziólkowski, Michal**
  01-407 Warszawa (PL)
- **Szafranski, Mateusz**
  95-045 Parzeczew (PL)
- **Holovin, Andrii**
  03-285 Warszawa (PL)
- **Jezak, Monika**
  26-610 Radom (PL)
- **Sosinski, Jakub**
  05-085 Kampinos (PL)
- **Przybyszewski, Pawel**
  04-479 Warszawa (PL)
- **Ciamulski, Tomasz**
  04-953 Warszawa (PL)

(74) Representative: **LDS Lazewski Depo & Partners**
ul. Prosta 70
00-838 Warsaw (PL)

(54) APPARATUS AND METHOD FOR THE PREPARATION OF A THREE-DIMENSIONAL BIODEGRADABLE FIBRE NETWORK PRODUCT OF NATURAL ORGANIC FIBRES, SAID PRODUCT AND USE THEREOF

(57) The invention relates to an apparatus and a method for the preparation of three-dimensional biodegradable fibre network product, wherein the apparatus performs the method comprising foaming natural organic fibres in aqueous solution, mould filling with the foamed natural organic fibres, wherein the mould has a plurality of pores, forming a three-dimensional biodegradable fibre network product by providing electromagnetic energy to the foamed natural organic fibres to control a pressure build-up internally within the mould, wherein the plurality of pores is adapted to evacuate liquid and steam generated by providing electromagnetic energy to the foamed natural organic fibres.

The invention also relates to a three-dimensional biodegradable fibre network product prepared by the inventive method and use of said product as a plant growth substrate, filtration medium, filling and/or acoustic and mechanical damping structure.

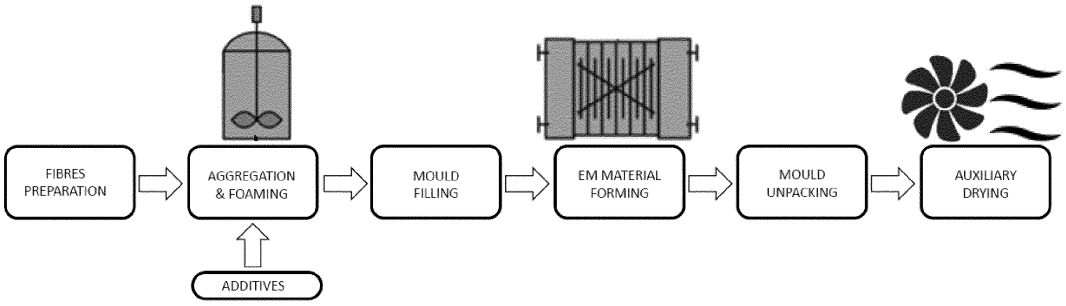

Fig. 1

EP 4 036 307 A1

Description

Technical Field

[0001] The present invention relates to an apparatus and a method for the preparation of a biodegradable three-dimensional fibre network product from defibrated natural organic fibres using electromagnetic (EM) energy. The invention relates also to said product and use thereof as a plant growth substrate, filtration medium, filling and/or acoustic and mechanical damping structure.

Background Art

[0002] Natural organic fibres of plants or animal origin have been widely used for many years in many industries, such as paper and wood industry, due to advantageous mechanical properties including good tensile strength, low weight and specific stiffness, but also due to its renewable character and ability to be broken down by bacteria making them environment friendly.

[0003] In the paper industry, cellulose fibres used as raw material are wetted, converted into a pulp, pressed, and dried giving sheets of paper having a substantially flat shape, wherein the fibres are oriented substantially in the sheet-plane direction, which results in a product having a good tensile strength in said sheet-plane direction. Compression into thin sheets of paper allows for effective removal of water from the material, whereas production of thicker sheets is limited and requires more energy to dry the final product.

[0004] Recently, foam forming techniques become the subject of interest in the production of lightweight products for thermal insulation and sound absorption. Burke, et al., "Properties of lightweight fibrous structures made by a novel foam-forming technique", (2019), Cellulose 26, 2529-2539, describes a method for the production of lightweight fibrous structures of low densities. The method is based on the use of liquid foam as a carrier medium for dispersed Kraft fibres by slow draining and drying until all foam has disappeared. The procedure resulted in bulk samples whose height (up to 25 mm) and density were controlled by initial fibre concentration and liquid fraction of the foam. The problem with this method is degradation of the foam during draining of water excess and long time required for draining and drying to preserve as much of the structure in the initial web form secured by the foam.

[0005] Timofeev, et al., "Drying of foam-formed mats from virgin pine fibers", (2016), Drying Technology, 34:10, 1210-1218, describes drying of foam-formed mats from virgin pine fibres using the steps of fibre foam preparation, draining of the liquid, and drying with the use of different drying methods, namely convective drying in the oven, impingement drying assisted by vacuum, combined impingement-infrared drying, and through-air drying. Shrinkage of the final product was observed in all tested drying methods with the lowest shrinkage observed for combined techniques.

[0006] Alimadadi, et al., "3D-oriented fiber networks made by foam forming", (2016), Cellulose 23, 661-671, describes form forming method to create the networks of 3D fibre orientation (3DFN). The described method results in the production of sheets having out-of-plane fibre orientation with high bulk and low density by creation of the 3D fibre orientation in the foam and maintaining the orientation during the forming, pressing, and drying stages.

[0007] Wood fibres are widely used for the manufacturing of fibreboards (such as MDF or HDF), however, in order to obtain desired properties of the fibreboard, fibres are mixed with a synthetic binder and formed into panels by hot-pressing. Synthetic binders used in the production of fibreboards are not environmentally friendly and such materials have limited uses.

[0008] US 2001024716A1 discloses a method of producing an open low-density absorbent fibrous structure comprising combining hydrophilic fibres with a structuring composition to form a mixture, said structuring composition comprising a binder material and a removable phase; producing a foam within said mixture and binding said fibres together with substantially water-insoluble bonds into a continuous, porous network, wherein said binder material stabilizes the porous network. Various noncompressive drying techniques including air drying and microwave drying are disclosed to evacuate removable phase. However, said drying techniques require that essentially all of the removable phase is transformed from a liquid phase into a vapour phase, which is either time consuming or expensive in terms of energy demand.

[0009] WO 2018237279 discloses perforated structures such as molds for manufacturing fibre-based materials by passing gas or liquid through the perforated structure, where different sets of perforations are grouped in zones to form a shape that is conformal to the product, Examples of the products that may be obtained with said molds are limited to structures of relatively small thickness such as carton, trays, conformal packaging, feminine hygiene products or diapers.

[0010] There is a need to provide methods of manufacturing of biodegradable three-dimensional fibrous web structures of arbitrary shapes and easily controllable properties, such as density and stiffness. Forming of such materials using defibrated cellulose fibres and other biodegradable components still presents a challenge.

[0011] It is well known in the industry of fibre-based products, that drying requires spending large amounts of energy to evacuate water or other solvents used in the processing of fibre-based products. On the other hand, transportation and transfer of fibrous suspensions is more convenient using suspensions having high water content. Decreasing water content in said fibrous suspensions may lead to clogging of the equipment or undesired properties of the final product. For these reasons, fibrous suspensions of high water content are often used and said water is preferably removed by filtration, as removal of the water by evaporation is very energy-con-

suming. Apart from water, volatile organic compounds (VOCs) are used as a liquid carrier or solvent, that allows for lowering of the temperature needed for their evaporation. However, volatile organic compounds are not environment friendly and attempts are made to develop more green processes.

[0012] Theoretically, as much as 0.6 kWh per each kg of water is needed for its evaporation. This does not include energy needed to heat water to a boiling point. In practise, more than 1 kWh is needed per each kg of water for its removal in industrial processes.

Summary of Invention

[0013] The authors of the present invention unexpectedly found that various three-dimensional biodegradable fibre network products can be obtained with low energy demand by providing electromagnetic energy to a foamed aqueous solution of natural organic fibres inside a porous mould.

[0014] An aspect of the present invention is to provide an apparatus for the preparation of a three-dimensional biodegradable fibre network product using electromagnetic energy.

[0015] Another aspect of the present invention is to provide a method for the preparation of a three-dimensional biodegradable fibre network product using electromagnetic energy. According to these aspects, the apparatus and method allow to control density and anisotropy inside the product and forming it into any shape. In a particular aspect, the apparatus and method allow very short forming times of the product. Moreover, the apparatus allows automation and large-scale production of a three-dimensional biodegradable fibre network product.

[0016] The apparatus and method according to these aspects of the present invention are defined by independent claims. Preferable embodiments are defined in dependent claims.

[0017] Another aspect of the present invention is to provide a three-dimensional biodegradable fibre network product prepared by the method according the invention.

[0018] Yet another aspect of the present invention is to provide a use of said product as a plant growth substrate, filtration medium, filling and/or acoustic and mechanical damping structure.

Brief Description of Drawings

[0019] Preferred embodiments of the present invention are subsequently described with respect to the accompanying drawings, in which:

Fig. 1 is a block diagram illustrating the method according to an embodiment,

Fig. 2 illustrates a closed mould according to an embodiment,

Fig. 3 is an example illustrating the interior of a mould,

Fig. 4 illustrates a mould according to an embodiment in cross-section with indication of pressure gradients,

Fig. 5 shows water retention curve for the material according to an embodiment,

Fig. 6 illustrates different embodiments of a mould integration with electromagnetic (EM) field delivery device, cross-sectional view,

Fig. 7 illustrates an apparatus according to an embodiment, in exploded view,

Fig. 8 illustrates the embodiment of Fig. 7 in assembled view,

Fig. 9 illustrates the product prepared according to example 1,

Fig. 10 illustrates the product prepared according to example 2,

Fig. 11 illustrates the product prepared according to example 3.

Description of Embodiments

[0020] It is noted that references in the specification to "an embodiment", "one embodiment", "another embodiment", etc., indicate that the embodiment described may include one or more features. Additionally, when features are described in connection with one embodiment, it should be understood that such features may also be used in connection with other embodiments whether or not explicitly described unless clearly stated to the contrary.

[0021] In a first aspect an apparatus for the preparation of a three-dimensional biodegradable fibre network product is provided, the apparatus comprising: a mould comprising a plurality of pores and configured to be filled with foamed natural organic fibres in aqueous solution, an electromagnetic energy provider for providing electromagnetic energy to the foamed natural organic fibres inside the mould, and a controller component configured to control the electromagnetic energy provided by the electromagnetic energy provider to control a pressure build-up internally within the mould, wherein the three-dimensional biodegradable fibre network product is prepared based on evacuating liquid and steam from the mould through the pores by the provided electromagnetic energy.

[0022] The pores of the mould are small enough that evaporated liquid within the mould results in a pressure build-up within the mould by the application of the elec-

tromagnetic energy. The electromagnetic energy provider is thus preferentially capable of dielectrically heating the aqueous solution within the mould until steam is formed which causes the pressure build-up. The liquid and steam evacuate through the pores of the mould, thereby shaping the natural organic fibres into their three-dimensional network and drying the solution.

[0023] In a preferred embodiment a surface share of the pores with regard to the surface encapsulating the volume within the mould is small such that internal pressure can build up, wherein the ideal share is preferentially dependent on a size of the mould. This is the case because the surface to volume ratio differs among different mould volumes.

[0024] For an internal mould volume of up to 1 litre the surface share of the pores is in an embodiment between 0.2% and 20%, preferably between 1% and 15% and most preferably between 4% and 12%. For the volume between 1 litre and 10 litres the surface share of the pores is in an embodiment between 0.5% and 40%, preferably between 2% and 20% and most preferably between 6% and 14%, and for the volume between 10 litres and 100 litres the surface share of the pores is in an embodiment between 1% and 60%, preferably between 4% and 40% and most preferably between 10% and 30%.

[0025] In an even more preferred embodiment, the shape of the mould is considered in addition to its volume for determining the most appropriate surface share of the pores.

[0026] In a preferred embodiment the controller component is configured to control the electromagnetic energy dependent on a distribution and/or size of the pores of the mould and a desired pressure within the mould.

[0027] Distribution and/or size of the pores is the factor in the moulds that allows the liquid/steam to exit the mould. Too large pores cause the mass to leak out of the mould with the fibres. Too small pores can become clogged too easily. In addition, it is worth mentioning that one hole (pore) with an area of 2 mm^2 is capable to suppress the flow of gas (steam) or fluid (water or liquid) less than two holes with the same surface sum, i.e., 1 mm^2 + 1 mm^2.

[0028] In a preferred embodiment the pore size is between 0.2 mm and 3 mm, preferably between 0.5 mm and 2 mm and most preferably between 0.8 mm and 1.5 mm.

[0029] In a preferred embodiment the pores are shaped as round holes and a diameter of the pores is between 0.2 mm and 3 mm, preferably between 0.5 mm and 2 mm and most preferably between 0.8 mm and 1.5 mm. While also other shapes of pores are feasible, it has been shown that the optimum shape of the pores is round.

[0030] This range allows the fibres to remain within the mould and not to leak, while at the same time the pores are large enough to avoid substantial clogging of the pores.

[0031] In a preferred embodiment the mould comprises or consists of a dielectric material having a softening point above 100°C

[0032] The dielectric material does not interfere with the (alternating) electromagnetic field and allows that the electromagnetic energy is not absorbed by the mould but by the content of the mould.

[0033] In a preferred embodiment the mould comprises or consists of metal, wherein the mould is a functional part of the electromagnetic energy provider.

[0034] If the mould comprises or consists of metal, it may for instance help to generate an electromagnetic field for providing the electromagnetic energy.

[0035] Fig. 6 illustrates different embodiments a), b), c) and d) of a mould integration with the electromagnetic energy provider, referred to as electromagnetic field delivery device (EM), in cross-sectional view:

a) EM device is a mould at the same time and material fills fully the EM cavity; this version is suitable for implementation as open-closed mould, i.e., a porous mould that may be closed and opened so as to remove the final product. The EM device acting as mould and surrounding the cavity is then provided with pores as needed.

b) Mould is made separately of EM cavity and is inserted inside it, In this example, the mould is preferably made of dielectric material so as not to interfere with the electromagnetic field.

[0036] In cases a) and b) the EM device preferably comprises a "closed cavity", the electromagnetic energy may be provided to the cavity using a cavity magnetron as known from microwave ovens. The cavity needs to be opened to access the finished product.

[0037] In cases c) and d) a different EM device forming a "tunnel cavity" is illustrated.

[0038] c) Mould is introduced between parallel plates of EM capacitor or into a EM tunnel. The tunnel cavity formed by the parallel plates of the EM tunnel is not limited in one spatial direction, in the example of Fig. 6 in the horizontal direction. Thus, the mould material can be inserted into the cavity without need to open the cavity. For instance, this allows a continuous process of moving the mould through the tunnel, or, in a different embodiment, of moving only the fibrous material through mould and tunnel. In the later case, not only the EM tunnel cavity is open in one spatial direction but also the mould is open in the same spatial direction.

[0039] d) Mould is missing upper and lower walls which are replaced by EM device parts; this embodiment may also not have vertical mould walls for continuous bulk material production captured between parallel plates or through the EM tunnel. A perspective view of this example is also illustrated in Fig. 7 and will be described below.

[0040] In a preferred embodiment the electromagnetic energy provider comprises a cavity and is configured to provide electromagnetic energy, in particular a radio frequency (RF) alternating electromagnetic field, radio

wave or microwave electromagnetic radiation, over the cavity.

[0041] In an embodiment the cavity is a closed cavity or a tunnel cavity and the electromagnetic radiation causing a dielectric heating is generated as appropriate based on the selected electromagnetic device.

[0042] The wavelengths of the electromagnetic radiation are not particularly limited. Preferably, a wavelength which acts to efficiently heat the foamed natural organic fibrous material is chosen. To this end, a frequency of the electromagnetic radiation is preferably chosen below 300 GHz and in particular between 10 MHz and 300 GHz.

[0043] In an embodiment the mould limits at least part of the cavity such that the foamed natural organic fibres in aqueous solution fully fill the cavity of the electromagnetic energy provider. This example is illustrated in view a) of Fig. 6.

[0044] In an embodiment the mould is implemented as closed porous mould, wherein the final product is removed from the mould after opening the closed porous mould. The mould according to this embodiment may optionally integrate parts of the walls of the cavity of the electromagnetic energy provider or not. It may be used with closed cavity and tunnel cavity electromagnetic energy providers.

[0045] In an embodiment the electromagnetic energy provider comprises two substantially parallel plates acting as electrodes. These electrodes can also be integral part of the mould and then comprise pores, cf. view d) of Fig. 6, or be separate from the mould, cf. view c) of the mould.

[0046] In an embodiment the mould is made separate from the electromagnetic energy provider and insertable into and removable therefrom. This embodiment is an alternative to integrating the mould and the electromagnetic energy provider and makes it easier to change the shape and layout of the final product.

[0047] In an embodiment at least one of the faces of the mould is integrally formed by one of the electrodes.

[0048] In an embodiment the mould is open in one spatial direction such as to enable continuous bulk material production along that direction.

[0049] In the example of Fig. 7, which further develops view d) of Fig. 6, an exploded perspective view of an apparatus 10 for the preparation of a three-dimensional biodegradable fibre network product is illustrated.

[0050] The apparatus 10 comprises a mould 20 which is partially integrated with a tunnel cavity of an electromagnetic energy provider 30. A bulk material 40 of foamed natural organic fibres in aqueous solution is inserted into the tunnel cavity along a direction indicated with an arrow A.

[0051] The electromagnetic energy provider 30 comprises in this example two parallel plate electrodes 32, 34. Together with dielectric faces 22, 24 the material 40 is restricted in four directions and only direction A is open. The size of the open surfaces is small compared to the remaining surfaces such that pressure as desired can build up.

[0052] While passing through the tunnel cavity, the material 40 is provided with electromagnetic energy, the required pressure builds up and steam evacuates through pores 26, 36 on the electrodes 32, 34 and the dielectric faces 22, 24, respectively.

[0053] The application of the electromagnetic energy is controlled by a controller 50, which, in this example, is illustrated in wired connection with electrodes 32, 34. It should be noted that the distribution of pores 26, 36 is only exemplary and schematic. Also, the form and shape of the electrodes 32, 34 and the remaining faces 22, 24 are not limiting and may be varied as desired.

[0054] Fig. 8 illustrates the apparatus 10 of Fig. 7 in an assembled view.

[0055] According to another broad aspect, the present invention provides a method for the preparation of a three-dimensional biodegradable fibre network product, the method comprising the following steps:

a. foaming natural organic fibres in an aqueous solution to obtain a foamed aqueous solution;
b. filling a mould with the foamed aqueous solution obtained in step a), wherein the mould has a plurality of pores;
c. forming a three-dimensional biodegradable fibre network product by providing electromagnetic energy to the foamed aqueous solution obtained in step a) to control a pressure build-up internally within the mould;

wherein the plurality of pores is adapted to evacuate liquid and steam generated by providing electromagnetic energy to the foamed natural organic fibres.

[0056] In a preferred embodiment, during proving of the electromagnetic energy to the foamed natural organic fibres in step c) at least a portion of the liquid and steam evacuating through the plurality of pores is removed outside of the area of electromagnetic energy operation.

[0057] During providing of the electromagnetic energy to the foamed aqueous solution in a mould, the plurality of pores allows to discharge not only steam, but also water or liquid comprised in a mould outside of the area of the operation of electromagnetic energy. Due to the fact, that this phenomenon take places at early stages of electromagnetic energy provision, a portion of liquid evacuating through the pores is of relatively low temperature and therefore significant portion of water contained in the form is evacuated without the need of its evaporation. Therefore, energy demand is reduced by energy needed to heat all the liquid to a boiling point of water and energy needed for phase transition of this mass into a gaseous state (steam).

[0058] The method according to an embodiment of the invention allows to use fibrous suspensions having high water content, that can be easily transported during initial phases of formation of a fibrous product, as said water can be efficiently removed during the step of providing

of electromagnetic energy to the foamed aqueous solution in a porous mould. Therefore, formation of the fibrous product and removal of water is combined in one step, which significantly reduces energy consumption and simplifies the process.

[0059] In a preferred embodiment, viscosity of a foamed aqueous solution in step a) is kept low during provision of electromagnetic energy in step c). Viscosity of a foamed aqueous solution obtained in step a) is preferably controlled by the use of biodegradable non-fibrous additives, such as those described herein. Low viscosity of the foam facilitates discharging of liquid and steam from pores of the mould during pressure build-up within the mould. At least portion of a liquid and steam evacuating from the pores can be continuously removed outside of an area of electromagnetic energy operation. This portion of a liquid and steam no longer absorbs electromagnetic energy, which significantly improves energy efficiency of the process.

[0060] In a preferred embodiment, the mould has a plurality of pores each having a pore size of 0.01 to 3 mm, preferably of 0.5 to 2 mm, most preferably from 0.8 to 1.5 mm.

[0061] In a preferred embodiment, a share of a total pore area in relation to a internal mould volume is between 0.05 and 0.15 cm^{-1}, preferably is between 0.05 and 0.1 cm^{-1}, most preferably is 0.1 cm^{-1}.

[0062] In a preferred embodiment, a surface share of the pores with regard to the surface encapsulating the volume within the mould is small such that internal pressure can build up, wherein

a. for an internal mould volume of up to 1 litre the surface share of the pores is between 0.2% and 20%, preferably between 1% and 15% and most preferably between 4% and 12%,
b. for the volume between 1 litre and 10 litres the surface share of the pores is between 0.5% and 40%, preferably between 2% and 20% and most preferably between 6% and 14%, and
c. for the volume between 10 litres and 100 litres the surface share of the pores is between 1% and 60%, preferably between 4% and 40% and most preferably between 10% and 30%.

[0063] In a preferred embodiment, a power density of electromagnetic energy provided to the foamed natural organic fibres in step c) is of 0.5 to 100 kW per kg of the foamed aqueous solution obtained in step a), preferably is of 1 to 25 kW per kg of the foamed aqueous solution obtained in step a), most preferably of 2 to 5 kW per kg of the foamed aqueous solution obtained in step a).

[0064] According to the method of the present invention, foaming natural organic fibres is performed in aqueous solution. The parameters of the foam, and particularly the degree of foaming, have a significant effect on the internal structure of the final fibre network product prepared by the method of the present invention. Foam is a good dispersing medium for fibres in the three-dimensional network and any suitable method of foaming known in the prior art can be used for the method according to the present invention. The size of the foam bubbles determines the distribution of fibres in the three-dimensional space. Therefore, controlling the bubbles allow for obtaining a controlled density gradient in the fibre network product prepared by the method of the present invention.

[0065] In one embodiment, foaming natural organic fibres in aqueous solution is performed by introducing a gas into the pulp.

[0066] The size and homogeneity of the foam bubbles are influenced by the different phases of the forming process. The stage of preparing the batch of material gives the possibility of shaping the character of the foam by adding to the mass some additives: blowing agents increase the amount of the gas filling the bubbles, surfactants control the foam's susceptibility to foaming. The appropriate selection of foam stabilizers allows the foam to maintain the desired properties until the fibres stiffen and take over the role of a supporting skeleton a structure that has so far been held by vanishing bubbles.

[0067] In one embodiment, an aqueous solution used for foaming natural organic fibres comprises at least one biodegradable non-fibrous additive comprising a foam stabilizer, foaming agent, biodegradable blowing agent or combination thereof.

[0068] Biodegradable foam stabilizers in form of polysaccharides can be used with the method of the present invention. In particular, chitosan and/or agar are preferable biodegradable foam stabilizers. Their main goal of foam stabilizers is to extend the life of wet foam, and to support the mechanical stability of the final product.

[0069] Biodegradable foaming agents meeting environmental standards can be used with the method of the present invention. In particular, coco glucoside is a preferred foaming agent.

[0070] Biodegradable blowing agents introduced into the water solution can also be used as an aid in the formation of foam. The preferred blowing agents are sodium carbonate and sodium bicarbonate, which have minimal impact on the environment.

[0071] In another embodiment, aqueous solution used for foaming natural organic fibres further comprises at least one further additive for controlling biomechanical properties of the obtained fibre network product, wherein said further additive comprise a polysaccharide, polysaccharide derivative, lignin, lignin derivative, cellulose, and a cellulose derivative.

[0072] Other non-fibrous additives can be used with the method of the present invention to define end parameters of the material. Some of the additives have a double role, as a material stabilizer and foam enhancers. Preferably, biomaterials, that are at least partially dissolvable in water are used. Preferred non-fibrous additives are agar and chitosan, polysaccharides, that are helping with

moisture control and stiffness of the product. Agar gel acts as a foam stabilizer, that extends the life of wet foam, and after electromagnetic forming it acts as a gluing agent, improving the strength of bonds between fibres.

[0073] Hydrophilic additives (e.g., chitosan) can be added for agricultural uses of the product obtained by the method according to the present invention, for maintaining moisture for a prolonged time. Biological additives (e.g., grapefruit extract) can be used for extension of the material lifecycle.

[0074] Water insoluble, hydrophobic additives (e.g., mineral powders) can be added for creating solutions for construction applications for water repellence.

[0075] In one embodiment, polysaccharides are used as a foam additive to increase the durability of the fibre network product after the forming process. The suitable polysaccharides comprise agarose, chitosan and combination thereof. Agarose mechanically stabilizes the material after forming, by strengthening the bonds between the fibres and securing their surface mechanically. Chitosan, in addition to performing the function of mechanical strengthening, is known for its biocidal properties, protects the material against excessive biological aging.

[0076] In another embodiment, starch is also used as a foam additive, which increases the stiffness of the material after the molding process.

[0077] Starch is a potential additive, that has impact on mechanical properties of the final material. It makes the outer layer more rigid and brittle.

[0078] In one embodiment lignin is used as an additive. Lignin may be introduced to increase mechanical strength and water resistance of final product.

[0079] Furthermore, in the present invention, chemical and mechanical derivatives of cellulose can be used as mechanical stabilizers or modifiers of the fibre surface. Examples include cellulose ethers, for example, methyl cellulose and ethyl cellulose, known for their use as industrial rheology modifiers. They can be used as foam stabilizing agents and modifier of interactions between the fibre network product and solvents, either polar or nonpolar. Other cellulose derivatives including hydroxypropylmethylcellulose and cellulose nanofibrils are suitable additives using the method according with the present invention.

[0080] The method according to an embodiment of the invention allows for controlling of density gradient of the three-dimensional biodegradable fibre network product in any direction in the whole space of the mould.

[0081] Density gradient of the three-dimensional biodegradable fibre network product prepared by the method according to the present invention is controlled by the arrangement of the plurality of pores in a mould. Density gradient of the three-dimensional biodegradable fibre network product prepared by the method according to the present invention is also controlled by the kind and/or power density of electromagnetic energy provided to the foamed natural organic fibres. Preferably, density gradient of the three-dimensional biodegradable fibre network product prepared by the method according to the present invention is controlled by the arrangement of the plurality of pores in a mould and by the kind and/or power density of electromagnetic energy provided to the foamed natural organic fibres. Mould with fewer pores having foamed fibres subjected to electromagnetic energy with higher power densities of electromagnetic energy results in obtaining higher density gradient in the three-dimensional biodegradable fibre network product.

[0082] The density of the fibre network product prepared by the method according to the present invention is also controlled by the density of the foam. Lowering foam density, leads to a fibre network product with lower density, and with higher density gradient.

[0083] Providing electromagnetic energy to the foamed natural organic fibres in a mould with a plurality of pores results in volumetric heating of the foamed natural organic fibres, that leads to the generation of steam and increase in pressure. This results in reorientation of the fibres in certain direction from the inside of the mould. These directions are controlled by the arrangement of the pores adapted to evacuate water and steam. More generally, the pores are adapted to evacuate liquid and steam. The arrangement of the pores comprises pore size, pore shape, pore direction, number of pores in the mould, distance from the pores. The arrangement of the pores sets direction of the steam release path causing compaction of the fibres at the walls of the mould, leading to reinforcement of the final fibre network product. Density gradient of the fibre network product is therefore controlled in a wide range. Keeping the pressure uniformly spread inside the mould and at low level provides a more uniform density of the fibre network product. On the other hand, with higher pressures and/or less uniform pressure distribution higher density gradient are obtained in the fibre network product. In one specific example, the method provides a three-dimensional biodegradable fibre network product, which is empty inside. Also, the density of the structure is controlled by the amount of natural organic fibres put into the mould.

[0084] Providing electromagnetic energy comprises one or more phases, preferably an initial phase and a final phase. During the initial phase electromagnetic energy is delivered intensively to reach water boiling point, which results in forcing the excess of water out of the mould. This initial phase saves energy and time required to evaporate the remaining water, which should be removed and preserves the fibrous web/mesh structure from collapsing/shrinking inside the mould. During the final phase of providing electromagnetic energy, bonds between natural organic fibres are created forming fibre network product. Depending on desired properties of the fibre network product, different electromagnetic energy levels can be required in consecutive phases, for instance, in order to prevent local overheating of the material.

[0085] In the present invention, only natural organic

fibres are used as raw material. These natural organic fibres can be of any type and size. Physical and mechanical properties of the fibre network product prepared according to the present invention, such as strength and flexibility can be controlled by the proportion of different fibres. A similar situation occurs with the biological properties of the fibre network product obtained with the present invention. Combination of different proportions of fibres will have a significant impact on biological resistance.

[0086] As an example, pure cellulose fibres as well as ligno-cellulose fibres that have been defibrated mechanically can be used as natural organic fibres for the present invention. Cellulose fibres similar to those used in paper production (after removing the lignin), plant fibres, and other organic fibres, multiversity of which is expected due to their nature can be used. Also, ligno-cellulose fibres that are fractioned mechanically (without removing the lignin) are suitable.

[0087] Natural organic fibres of one type or as mixture of different type of fibres can be used with the present invention (e.g., by weight: 50% cellulose fibres, 50% hemp fibres - a composition that is more crack resistant than 100% cellulose). Crack resistance is achieved by incorporating long (up to 30mm) natural fibres into the foam. The likely mechanism is that there is an increase in the interaction between a greater number of fibres per volume of the product.

[0088] In one embodiment, the content of natural organic fibres in three-dimensional fibre network product is at least 95% on a dry basis.

[0089] In one embodiment, the length of natural organic fibres is from 0.1 cm to 3.0 cm.

[0090] In one embodiment, natural organic fibres are cellulose fibres.

[0091] In another embodiment, natural organic fibres are ligno-cellulose fibres.

[0092] Yet, in another embodiment, natural organic fibres are a combination of cellulose fibres and ligno-cellulose fibres.

[0093] Referring to Fig. 1, the method of the present invention is illustrated, wherein in the initial fibres preparation step, stock natural organic fibres, such as cellulose fibres are being defibrated using already known methods. The obtained defibrated natural organic fibres are suspended in water to obtain an aqueous solution.

[0094] Next, aggregation and foaming of the natural organic fibres in aqueous solution is performed. There are many methods supporting the foam creation during this phase. It could be done by injecting a gas through nozzles, shaking/ultrasounds, mechanical mixing or increasing the gas saturation by increasing the pressure in the mixing chamber (generating overpressure relative to the forming process pressure). At this step, additional additives can be added.

[0095] Next, mould filing is performed and foamed natural organic fibres are placed in a mould of arbitrary size and shape. Three-dimensional mould is used to control the of shape the fibre network product as well as to limit the foamed material expansion during the fast thermodynamical process (scaling of production speed). The mould has a plurality of pores to allow for evaporation of steam and gases during forming. The number of pores and its size allows for control of the density gradient and other physical characteristics of the fibre network product obtained in the method according to the present invention. Pores can be small, but also can have a form of missed walls or parts of the walls of the mould. The mould is made of material, having a softening point above 100°C. In one embodiment the mould is at least partially made of a dielectric material selected from PVC, PVL, silicon, PTFE, PTFE GF30, PP-H, PEEK, ceramics, or combination thereof. In a preferred embodiment, the mould is made of dielectric material, having a softening point above 100°C.

[0096] Next, EM material forming is performed as depicted in Fig. 1. During this step electromagnetic energy is provided to the foamed natural organic fibres in the mould. Kind of electromagnetic energy in terms of frequency and power density is adapted to desired properties of the final fibre network product prepared.

[0097] In the EM material forming step, some of the foam bubbles are degraded, however most bubbles grow as a result of an increase in the volume of gases with increasing temperature. When the process reaches the boiling point, the degradation of the old bubbles does not matter anymore, as new ones are intensely formed in the entire volume of the mold. They do not allow the fibre network to collapse until it is rigid enough to maintain a stable structure.

[0098] In one embodiment, electromagnetic energy having a frequency in a range of 10 - 100 MHz is provided to the foamed natural organic fibres. This frequency range is preferable for implementation of electromagnetic energy delivery device in a form of parallel plate capacitor or almost parallel plate capacitor. Relation of wavelength to the device size allows for such implementation. Such implementation allows for automation of the material forming in continuous process, while the material is moving along parallel plates. The capacitor is popular implementation in the industry around 27 - 35 MHz frequency range. Another advantage of this frequency range is that electromagnetic energy can be better dissipated in losses in natural organic fibrous material and polymer additives.

[0099] In another embodiment, electromagnetic energy having a frequency in a range of 300 MHz - 25 GHz is provided to the foamed natural organic fibres. This frequency range is preferable for implementation of electromagnetic energy delivery device in a form of a resonator, usually built as a closed cavity or a tunnel with the resonance inside the tunnel. Another advantage of this frequency range is that electromagnetic energy can be better dissipated in water, especially at 2.4 GHz resonance of water particles. The tunnel resonances are popular implementation in the industry around 900 MHz fre-

quency.

[0100] In another embodiment, electromagnetic energy used for forming a three-dimensional biodegradable fibre network product has a frequency in a range of 24.00 GHz - 24.25 GHz.

[0101] Preferably, in the method according to the invention electromagnetic energy is provided uniformly. This can be achieved by a combination of uniform electromagnetic field generation technique and physical movement (longitudinal or rotations) of the mould within the semi-uniform electromagnetic field.

[0102] Preferably, during the foamed natural organic fibres is subjected to electromagnetic energy, a ventilation system is used, allowing for removal of moisture from the space surrounding the form. The efficiency of the ventilation increases for shorter forming times (higher powers of electromagnetic energy can be applied). The delivery of warm air can further optimize the forming process in combination with the delivery of electromagnetic energy.

[0103] When bonds between fibres start to form and the foam starts to disappear (stable shape of the material begins), mould may be optionally unpacked and further drying of the obtained fibre network product can be done by applying a flow of dry air and conventional heating (with or without applying of electromagnetic energy). This optional step is marked as auxiliary drying on Fig. 1.

[0104] Referring to Fig. 2, the shape of a closed mould according to an embodiment is illustrated. Three of the four walls are flat and perpendicular to each other, the fourth is spherical. All of the outer surfaces have different normal vectors. On the two flat walls and the spherical one there are pores in a form of round holes drilled through the walls. Diameters of those holes and distribution density are varied.

[0105] In Fig. 3, the interior of a mould from Fig. 2 is illustrated for better understanding of the invention. The walls of the mould limit and determine the shape of the formed material. They are themselves impermeable to water vapor, but thanks to the holes, water vapor escapes through three of the four walls of the mould.

[0106] Fig. 4 shows a cross section of the mould according to an embodiment (the same as shown in Fig. 3 and Fig. 4) with an indication of pressure gradients depending on mould shape and pore placements. During the EM forming process, the temperature of the foamy material inside the mould increases simultaneously throughout the entire volume of the mould. It is because EM energy is accumulated over the entire volume of foamy material, i.e. by all the mass contained in the mould. When the temperature reaches the boiling point of water, an intense process of water vapor formation begins, the more intense the higher the power density used in the process. This creates a pressure build-up that seeks to escape through the pores in the mould walls. The lines of the steam flow currents are shaped by pressure gradients, and those in the area of the pores coincide with the vectors normal to the wall surfaces in these places. Those lines of steam flow generate pressure on fibres, which are wet in the first phase of the process and susceptible to displacement and crushing. That is why the density of the final fibre network product may be non-uniform. Moreover, we can distinguish many directions along which the density increases. These density gradients coincide with the pressure gradients shown in Fig. 4.

[0107] It is worth noting, the greater the local total open area of the mould, the smaller the pressure gradients it generates. The steam leakage rate, however, also depends on the size of individual pores, their shape, and the density of their distribution. As illustrated in Fig. 4, more steam will flow through the area of the pores on the spherical wall at the same time than through the remaining open areas of the mould. This is due to the much larger diameter of the pores on the spherical wall and a relatively large number of them. However, the density distribution in the product obtained from such mould has a smaller material density gradient from the spherical side, but it remains much more even over a large area - similar to the pressure gradient distribution shown in Fig. 4. Fragments of a final fibre network product obtained according to an embodiment, which was located adjacent to the flat walls in the regions corresponding to the pores in the mould have a greater density of the material, the fibre network product is strengthened, but only in a small area covered by the "action" of the mould pores. It is significant that from the side of the third flat wall, which is adjacent to the solid wall (without pores) of the mould, it is more difficult to distinguish a clear differentiation of density, the density gradient is absent, and the obtained fibre network product is softer.

[0108] In the state of the art, pores in bottom part of the mould could normally serve as drainage holes for water excess removal by gravitation or by additional application of vacuum. However, such process usually leads to some degradation of the foam. In presented forming method, the draining step is not used and excess of water is forced out of the mould by application of electromagnetic energy at a level which causes water boiling inside the mould.

[0109] In one embodiment, parts of the mould are composed of metal parts of the electromagnetic field delivery device. For example, parallel metal plates of a capacitor can also serve as upper or lower walls of the mould allowing to form larger sheets of material.

[0110] In another embodiment, parts of the mould or electromagnetic field delivery device have movable elements which allow automatizing the manufacturing process of material filling into the mould, travelling through the mould or removing it out of the mould after the formation of the final fibre network product.

[0111] According to another aspect of the invention a three-dimensional biodegradable fibre network product is provided, wherein the fibre network product is prepared from foamed natural organic fibres using electromagnetic energy, wherein the fibre network product has a density of 8 - 150 kg/m^3 and total porosity of more than 90%.

[0112] In one embodiment, the product has a density of 8 - 90 kg/m^3, preferably a density of 8 - 70 kg/m^3, more preferably a density of 8 - 50 kg/m^3, the most preferably a density of 8 - 30 kg/m^3.

[0113] The three-dimensional biodegradable fibre network product according to the present invention can be further characterized by one or more of the following features:

- Local inhomogeneity of material density - the density gradient can be controlled by power input and mould geometry;
- High stiffness relation to the weight by increasing the density in the outer layer of the structure, effectively forming shell;
- High porosity - the structure is bone-like and is made of intertwined and entangled fibres, providing a solid mechanical support, with a large share of free space for potential implementation of other substances;
- Shape memory - the structure behaves very resiliently in a wide range of deformations (e.g., a wet blanket with dimensions h = 4 cm, d = 4 cm, when compressed to h = 70% , returns to approx. h = 96%);
- High dimensional stability under the influence of moisture - after saturation with water, change of linear dimensions preferably does not exceed approx. 1%;
- fully biodegradable.

[0114] The physical properties of the structure according to the invention can be determined by the method described by the Research Station in Naaldwijk, Netherlands (Wever '2002). Used standards: PN-EN 13039 - determination of organic matter content, PN-EN 13041 - determination of total porosity, volume density, shrinkage, water and air capacity at a water potential of -10 cm H_2O.

[0115] In one embodiment, there is provided a fibre network product prepared by the method of the present invention having the following characteristics:

Density: 65-75 [kg/m^3];

pH 6.3-6.8;

EC (electrical conductivity) 0.07-0.10 [mS/cm];

General porosity of more than 95%;

The volume of water at the water potential of -10 cm of more than 45%;

The volume of air at the water potential of -10 cm of more than 48%;

[0116] Fig. 5 shows water retention curve for the fibre network product according to an embodiment of the present invention. The X-axis represents a potential from 0 to -10 cm H_2O, the Y-axis represents water volume (vol %). The fibre network product according to the embodiment of the present invention is characterized by high water and air capacity of more than 45%, which favours the growth of young plants such as seedlings. The tested fibre network product in a form of cubes also have an appropriate pH of 6 - 7 and are characterized by a very low EC, which greatly facilitates the selection of optimal fertilization. In an embodiment, the preferred density of the fibre network product is about 70 kg/m^3 (in the range of 65 - 75 kg/m^3). The fibre network product with such a density has the most advantageous air-water properties, similar to those of mineral wool.

[0117] The three-dimensional biodegradable fibre network product of the present invention can be preferably used as a plant growth substrate, filtration medium, filling and/or acoustic and mechanical damping structure.

[0118] The embodiments and examples of the present invention are to be regarded in all respects as merely illustrative and not restrictive. Therefore, the present invention may be embodied in other specific forms without deviating from its essence and the present invention, which is to be limited only by the scope of the claims.

Examples

Example 1

[0119] The product prepared according to example 1 is illustrated in Fig. 9.

[0120] The product was prepared according to the following steps:

1. Wet defibrated paper cellulose with average fibre dimensions 3 mm in length and 0.01 mm in diameter was suspended in water, reaching a cellulose concentration of 12%.

2. Pure coco glucoside was used as a foaming agent.

3. As the binder 1, increasing the stiffness of the finished product, a 10% aqueous solution of corn starch, prepared by dissolving the starch in boiling water, was used.

4. Sodium carbonate was used as the blowing agent.

5. 170 g of 12% cellulose, 0.8 g of coco glucoside, 20 g of sodium carbonate and 120 g of 10% starch were combined in a vessel.

6. The mixture was foamed on a high-speed mixer to obtain a foam with a density of 600 g/dm^3.

7. 100 g of foam was placed in a Teflon cuboid mould with dimensions of 5 cm x 6.5 cm x 8 cm and 1.5 mm ventilation holes uniformly distributed on entire surface, with density 4 holes/cm^2. Foam in mould was

then placed in 2.4 GHz, 1850 W electromagnetic field, for 8 minutes.

8. After 8 minutes, the product was removed from the mould.

9. Finished product weighted 5.7 g.

[0121] The method presented in example 1 makes it possible to obtain structures with high mechanical strength and high impact strength in relation to their mass.

Example 2

[0122] The product prepared according to example 2 is illustrated in Fig. 10.

[0123] The product was prepared according to the following steps:

1. Wet defibrated papermaking cellulose with average fibre dimensions of 3 mm in length and 0.01 mm in diameter was adjusted to a concentration of 12%.

2. Hemp fibres of average dimensions 15 mm in length and 0.1 mm in diameter, were sterilized for 60 minutes in a boiling solution of 1% hydrogen peroxide, dried to 5% moisture, and then dry defibrated in a high-speed laboratory mill.

3. A 1% agar solution in demineralized water was used as binder 1.

4. As binder 2, a 1.5% chitosan solution in 1% acetic acid was used.

5. Pure coco glucoside was used as a foaming agent.

6. 170 g of 12% cellulose, 7 g of hemp fibres, 0.4 g of coco glucoside, 150 g of 0.5% agar solution, 10 g of 1.5% chitosan solution in 1.5 acetic acid were combined in a vessel.

7. The mixture was foamed on a high-speed mixer to obtain a foam with a density of 600 g/dm^3.

8. 50 g of the foam was placed in a Teflon cuboid with dimensions of 3 cm x 6 cm x 10 cm and 1.6 mm ventilation holes uniformly distributed on entire surface, with density 5 holes/cm^2. Foam in mould was then placed in a 2.4 GHz, 1850 W electromagnetic field for 5 minutes.

9. Finished product weighted 8.7 g.

[0124] The highest density gradient is at the outer walls of the product and reaches 15 kg/m^3 on each 1 mm towards outside direction. The method in example 2 allows to obtain a material with higher flexibility and is characterized by high acoustic insulation.

Example 3

[0125] The product prepared according to example 3 is illustrated in Fig. 11.

[0126] The product was prepared according to the following steps:

1. Pulp of wood with an average length of 3 mm and an average thickness of 0.1 mm was suspended in water to obtain a concentration of 12%.

2. Linen fibres 15 mm in length and 0.1 mm in diameter were dry defibrated in a high-speed laboratory mill.

3. As a binder, a 1% agar solution in demineralized water was used.

4. 100% pure coco glucoside was used as foaming agent.

5. 175 g of 12% wood pulp, 14 g of flax fibres, 0.8 g of coco glucoside, 150 g of 1% agar solution were combined in a vessel.

6. The mixture was foamed on a high-speed mixer to obtain a foam with a density of 600 g/dm^3.

7. 40 g of the foam was placed in a Teflon multi-form in 4 cylindrical moulds having internal dimensions: length = 4 cm, height = 4 cm and 2 mm ventilation holes uniformly distributed on entire surface, with density 7 holes/cm^2. Foam in mould was then placed in 27 MHz, 1 kW electromagnetic field for 4 minutes.

8. Finished product weighted 3.8 g.

[0127] The method provided in example 3 allows to obtain a material with good water absorption and favourable air-water relation for plant growth.

Example 4

[0128] The sample of the product was prepared according to the following steps:

1. Wet defibrated paper cellulose with average fibre dimensions 3 mm in length and 0.01 mm in diameter was suspended in water, reaching a cellulose concentration of 12%.

2. Dry hemp fibres with max fibre dimensions 40 mm in length and 4 mm in diameter was defibrated mechanically.

2. 25% aqueous coco glucoside solution was used as a foaming agent.

3. As foam stabilisers was used 1% aqueous agar solution and 1.5% chitosan solution in 0.6% formic acid.

4. 350 g of 12% cellulose, 14 g of hemp fibres, 20 g of 1.5% chitosan solution, 150 g of 1.5% aqueous sodium phosphate solution, 150 g of 1% aqueous agar solution and 1.6 g of 25% aqueous coco glucoside solution were combined in a vessel.

5. The mixture was foamed on a high-speed mixer to obtain a foam with a density of 500 kg/m^3.

6. 300.1 g of foam was placed in a peek cuboid mould with dimensions of 102 mm x 102 mm x 60 mm and 1.6 mm ventilation holes uniformly distributed on entire surface, the area of the holes is 16% of the mould area.

7. Foam in mould was then placed in 2.4 GHz, 3 kW electromagnetic field.

8. During the electromagnetic field running with air flowing, the leakage of the liquid and steam was removed outside of the operation of electromagnetic field.

9. The time from the appearance of the first drop of the liquid on the mould surface to the end of leakage was 71 s.

10. At the time of the end of the leak, the mould was removed from the electromagnetic field, finished product weighted 131.9 g.

Claims

1. An apparatus for the preparation of a three-dimensional biodegradable fibre network product, the apparatus comprising:

a mould comprising a plurality of pores and configured to be filled with foamed natural organic fibres in aqueous solution;
an electromagnetic energy provider for providing electromagnetic energy to the foamed natural organic fibres inside the mould; and
a controller component configured to control the electromagnetic energy provided by the electromagnetic energy provider to control a pressure build-up internally within the mould, wherein the three-dimensional biodegradable fibre network product is prepared based on evacuating liquid and steam from the mould through the pores by the provided electromagnetic energy.

2. The apparatus according to claim 1, wherein a surface share of the pores with regard to the surface encapsulating the volume within the mould is small such that internal pressure can build up, wherein

a. for an internal mould volume of up to 1 litre the surface share of the pores is between 0.2% and 20%, preferably between 1% and 15% and most preferably between 4% and 12%,
b. for the volume between 1 litre and 10 litres the surface share of the pores is between 0.5% and 40%, preferably between 2% and 20% and most preferably between 6% and 14%, and
c. for the volume between 10 litres and 100 litres the surface share of the pores is between 1% and 60%, preferably between 4% and 40% and most preferably between 10% and 30%.

3. The apparatus according to any of the preceding claims, wherein the controller component is configured to control the electromagnetic energy dependent on a distribution and/or size of the pores of the mould and a desired pressure within the mould.

4. The apparatus according to any of the preceding claims, wherein the pores are shaped as round holes and a diameter of the pores is between 0.2 mm and 3 mm, preferably between 0.5 mm and 2 mm and most preferably between 0.8 mm and 1.5 mm.

5. The apparatus according to any of the preceding claims, wherein the mould comprises or consists of a dielectric material having a softening point above 100°C.

6. The apparatus according to any of the preceding claims, wherein the mould comprises or consists of metal, wherein the mould is a functional part of the electromagnetic energy provider.

7. The apparatus according to any of the preceding claims, wherein the electromagnetic energy provider comprises a cavity and is configured to provide electromagnetic energy, in particular a radio frequency (RF) alternating electromagnetic field, radio wave or microwave electromagnetic radiation, over the cavity.

8. The apparatus according to claim 7, wherein the mould limits at least part of the cavity such that the foamed natural organic fibres in aqueous solution fully fill the cavity of the electromagnetic energy provider.

9. The apparatus according to claim 7 or 8, wherein the mould is implemented as closed porous mould,

wherein the final product is removed from the mould after opening the closed porous mould.

10. The apparatus according to any of the preceding claims, wherein the electromagnetic energy provider comprises two substantially parallel plates acting as electrodes.

11. The apparatus according to any of the preceding claims, wherein the mould is made separate from the electromagnetic energy provider and insertable into and removable therefrom.

12. The apparatus according to claim 10, wherein at least one of the faces of the mould is integrally formed by one of the electrodes.

13. The apparatus according to any of the preceding claims, wherein the mould is open in one spatial direction such as to enable continuous bulk material production along that direction.

14. A method for the preparation of three-dimensional biodegradable fibre network product, the method comprising the following steps:

a. foaming natural organic fibres in an aqueous solution to obtain a foamed aqueous solution;
b. filling a mould with the foamed aqueous solution obtained in step a), wherein the mould has a plurality of pores;
c. forming a three-dimensional biodegradable fibre network product by providing electromagnetic energy to the foamed aqueous solution obtained in step a) to control a pressure build-up internally within the mould;

wherein the plurality of pores is adapted to evacuate liquid and steam generated by providing electromagnetic energy to the foamed natural organic fibres.

15. The method according to claim 14, wherein during proving the electromagnetic energy to the foamed natural organic fibres in step c) at least a portion of the liquid and steam evacuating through the plurality of pores is removed outside of the area of electromagnetic energy operation.

16. The method according to any of claims 14 to 15, wherein the mould has a plurality of pores each having a pore size of 0.01 to 3 mm, preferably of 0.5 to 2 mm, most preferably from 0.8 to 1.5 mm.

17. The method according to any of claims 14 to 16, wherein a share of a total pore area in relation to a internal mould volume is between 0.05 and 0.15 cm^{-1}, preferably is between 0.05 and 0.1 cm^{-1}, most preferably is 0.1 cm^{-1}.

18. The method according to any of claims 14 to 16, wherein a surface share of the pores with regard to the surface encapsulating the volume within the mould is small such that internal pressure can build up, wherein

a. for an internal mould volume of up to 1 litre the surface share of the pores is between 0.2% and 20%, preferably between 1% and 15% and most preferably between 4% and 12%,
b. for the volume between 1 litre and 10 litres the surface share of the pores is between 0.5% and 40%, preferably between 2% and 20% and most preferably between 6% and 14%, and
c. for the volume between 10 litres and 100 litres the surface share of the pores is between 1% and 60%, preferably between 4% and 40% and most preferably between 10% and 30%.

19. The method according to any of claims 14 to 18, wherein a power density of electromagnetic energy provided to the foamed natural organic fibres in step c) is of 0.5 to 100 kW per kg of the foamed aqueous solution obtained in step a), preferably is of 1 to 25 kW per kg of the foamed aqueous solution obtained in step a), most preferably of 2 to 5 kW per kg of the foamed aqueous solution obtained in step a).

20. The method according to any of claims 14 to 19, wherein an aqueous solution used for foaming natural organic fibres comprises at least one biodegradable non-fibrous additive selected from a foam stabilizer, surfactant, biodegradable blowing agent or combination thereof.

21. The method according to any of claims 14 to 20, wherein aqueous solution used for foaming natural organic fibres further comprises adding at least one further additive for controlling biomechanical properties of the fibre network product, wherein said further additive is selected from a polysaccharide, polysaccharide derivative, lignin, lignin derivative, cellulose, and a cellulose derivative.

22. The method according to any of claims 14 to 21, wherein an aqueous solution used for foaming natural organic fibres comprises chitosan and/or agar.

23. The method according to any of claims 14 to 22, wherein an aqueous solution used for foaming natural organic fibres comprises coco glucoside.

24. The method according to any of claims 14 to 23, wherein the mould is made of dielectric material, having a softening point above 100°C.

25. The method according to any of claims 14 to 24, wherein electromagnetic energy used for forming a

three-dimensional biodegradable fibre network product has a frequency in a range of 10 - 100 MHz.

26. The method according to any of claims 14 to 25, wherein electromagnetic energy used for forming a three-dimensional biodegradable fibre network product has a frequency in a range of 300 MHz - 25 GHz.

27. A three-dimensional biodegradable fibre network product prepared by the method according to any one of claims 14 - 26.

28. Use of a three-dimensional biodegradable fibre network product according to claim 27 as a plant growth substrate, filtration medium, filling and/or acoustic and mechanical damping structure, thermal isolator, efficient moisture absorber and evaporator.

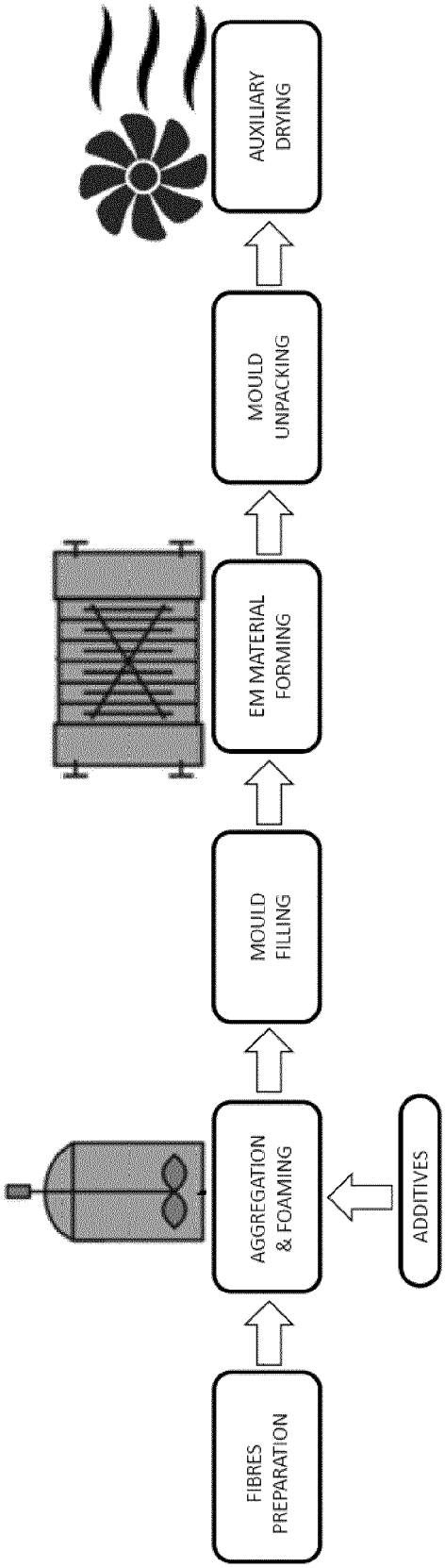
FIBRES PREPARATION
AGGREGATION & FOAMING
ADDITIVES
MOULD FILLING
EM MATERIAL FORMING
MOULD UNPACKING
AUXILIARY DRYING

Fig. 1

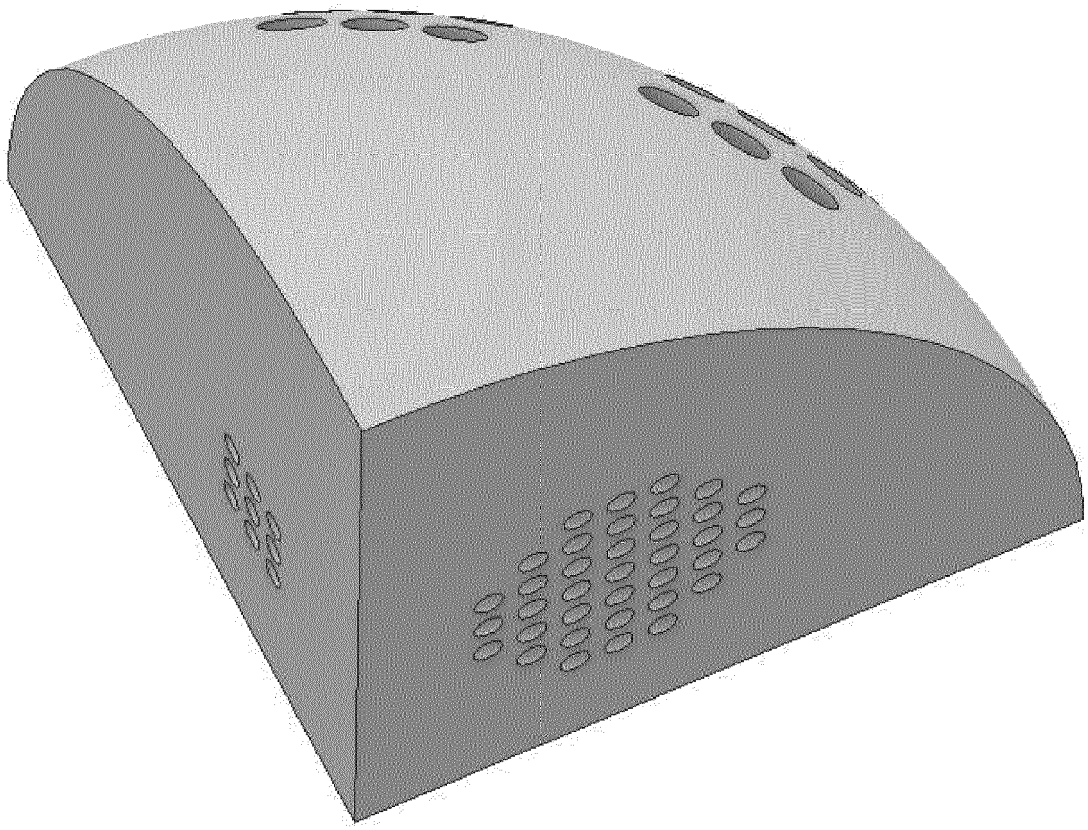

Fig. 2

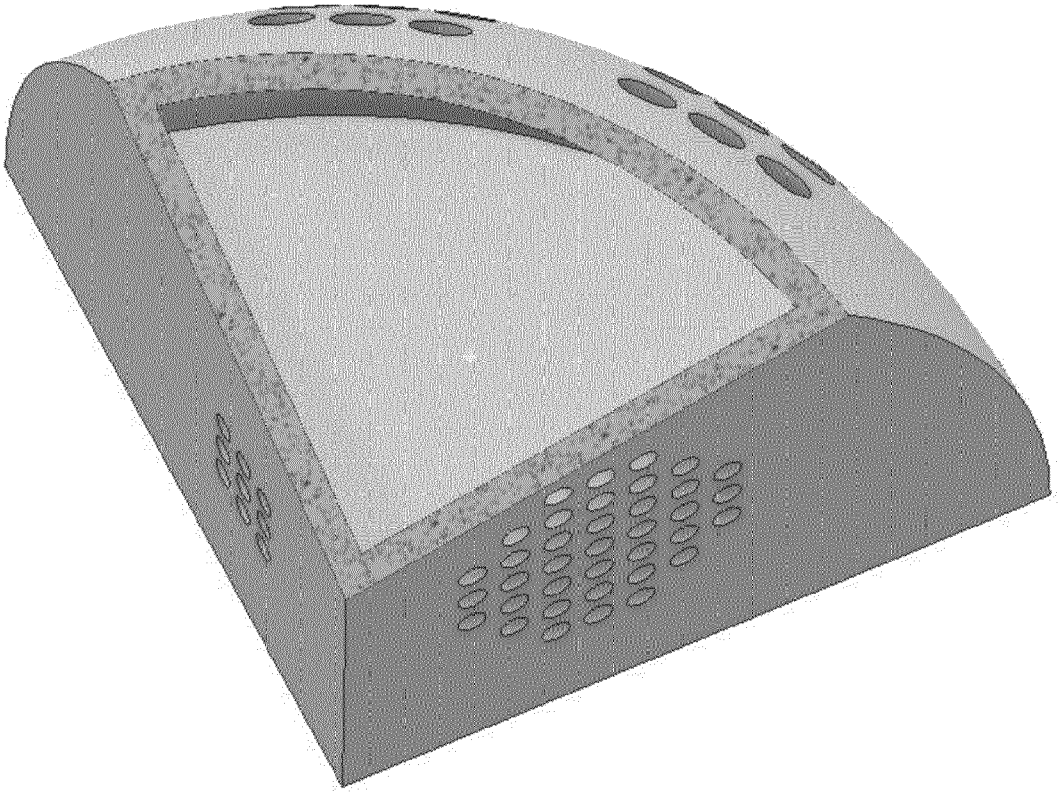

Fig. 3

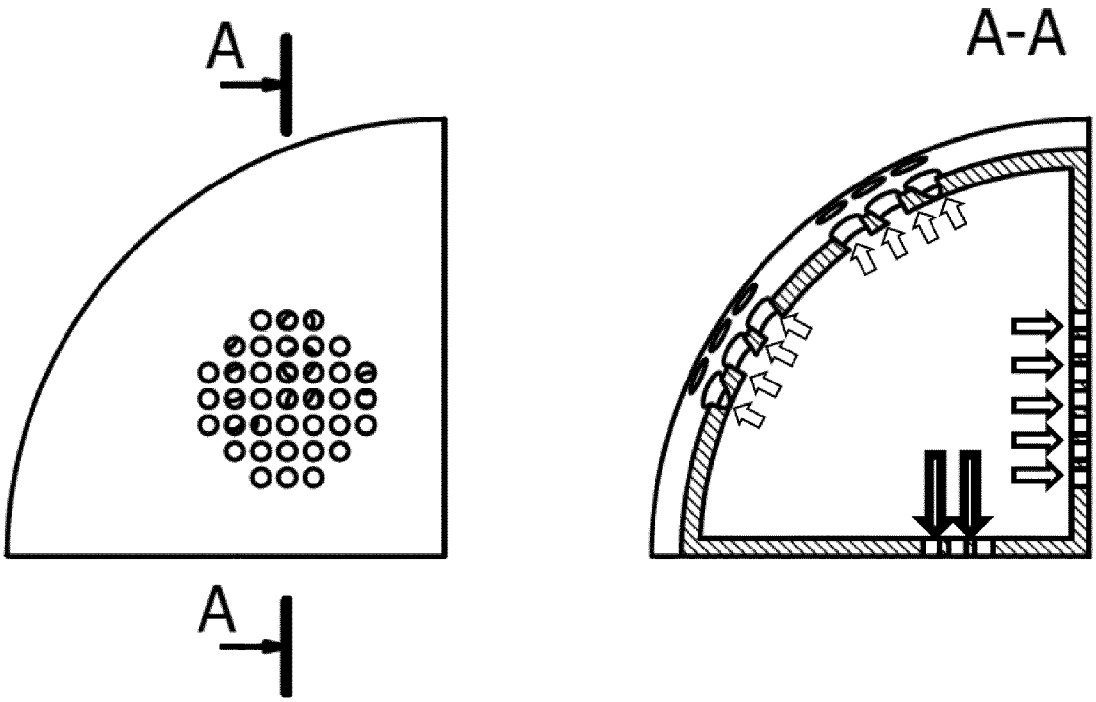

Fig. 4

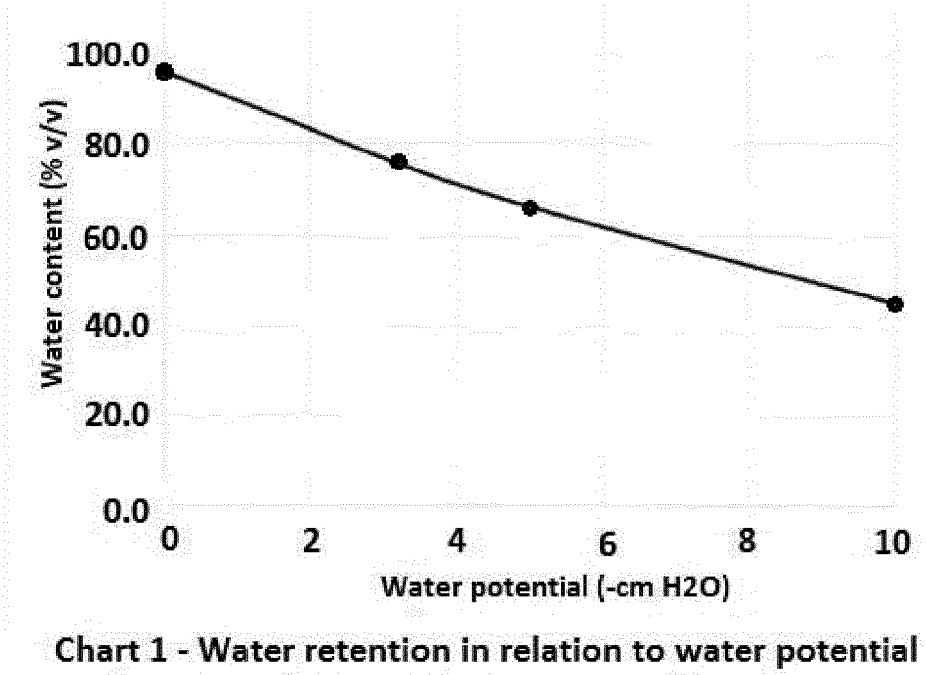
100.0
80.0
60.0
40.0
20.0
0.0
Water content (% v/v)
0
2
4
6
8
10
Water potential (-cm H2O)
Chart 1 - Water retention in relation to water potential

Fig. 5

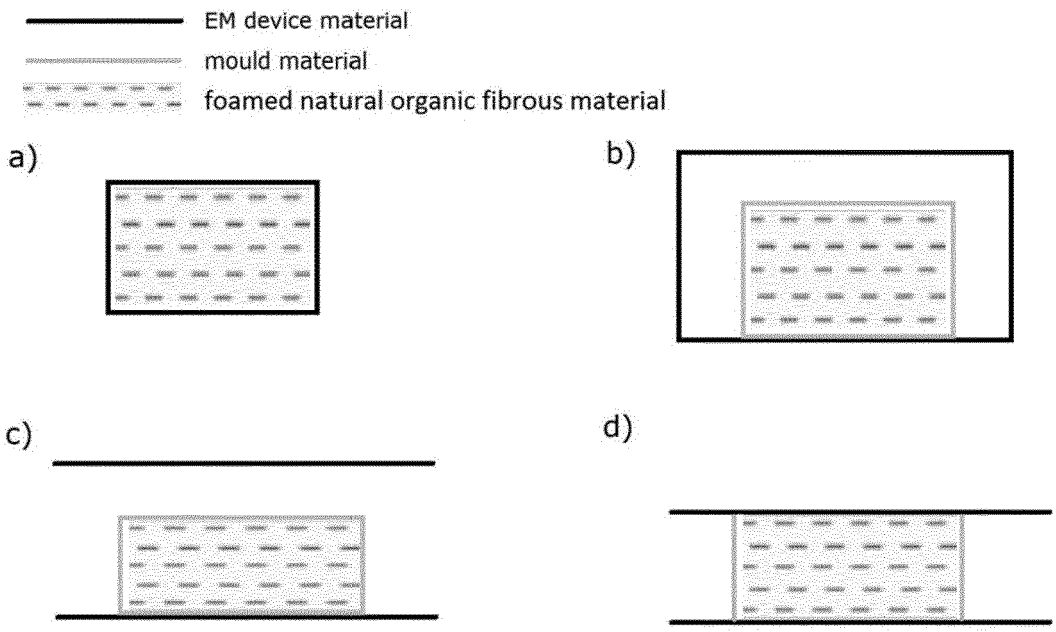
EM device material
mould material
foamed natural organic fibrous material
a)
b)
c)
d)

Fig. 6

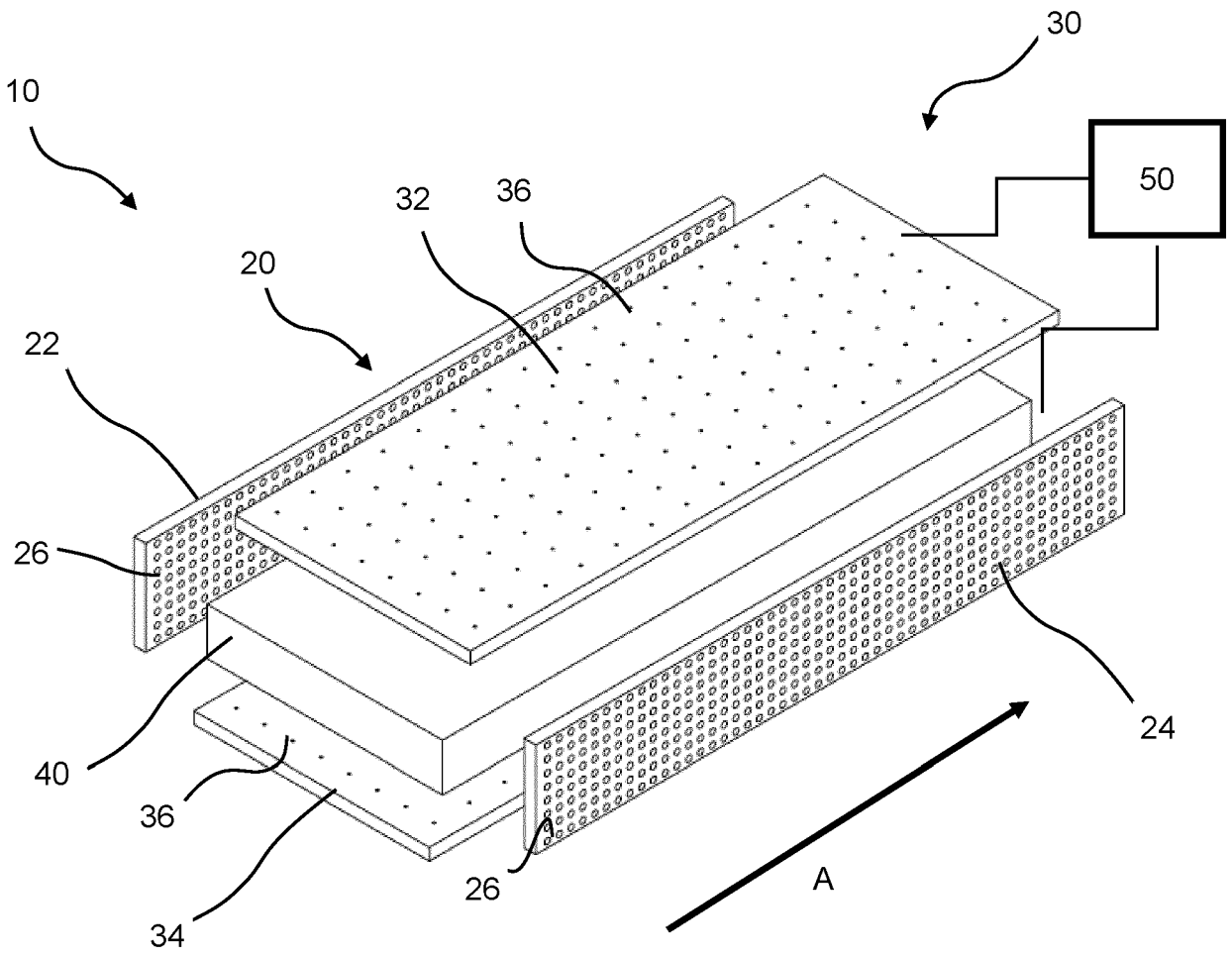

Fig. 7

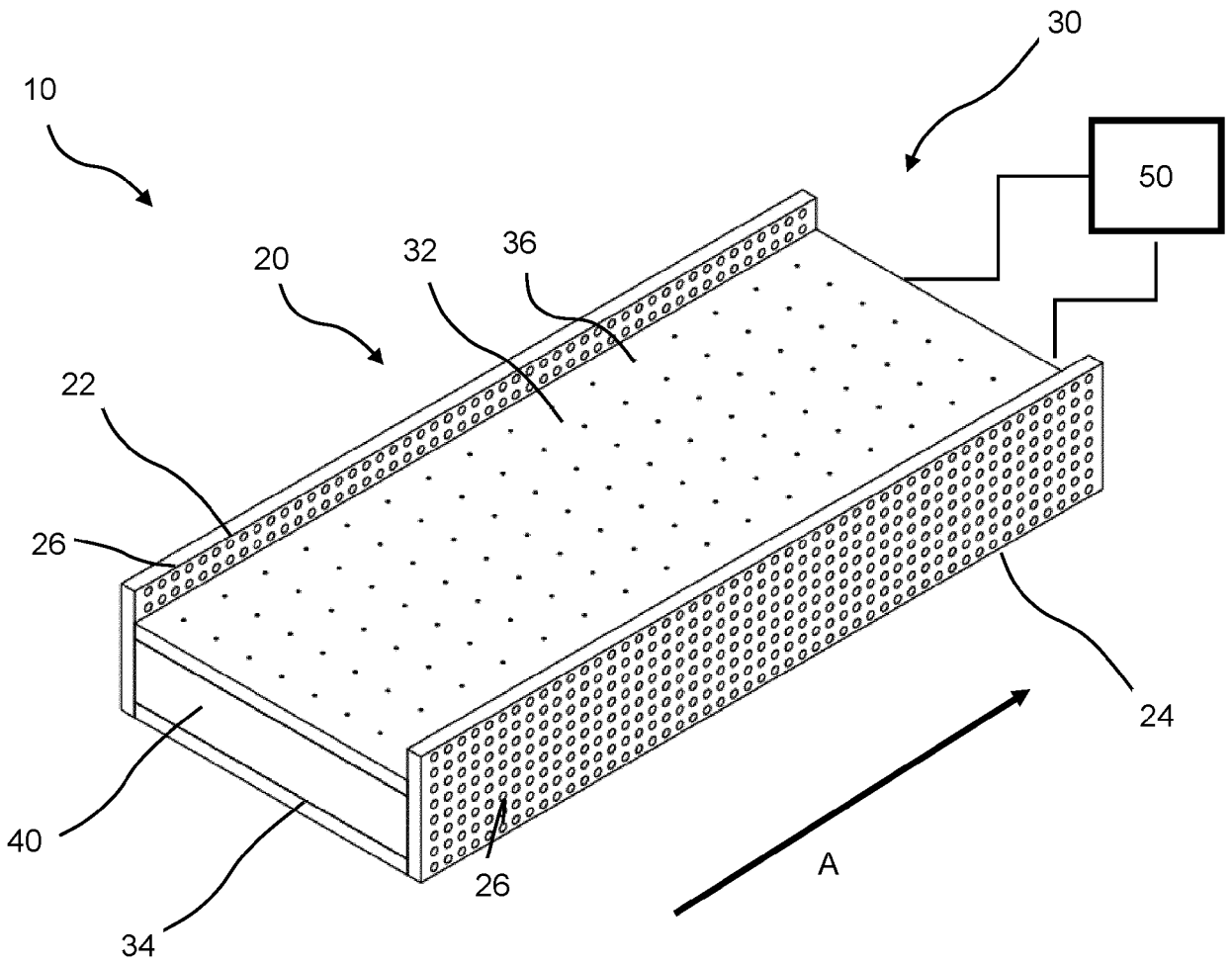

Fig. 8

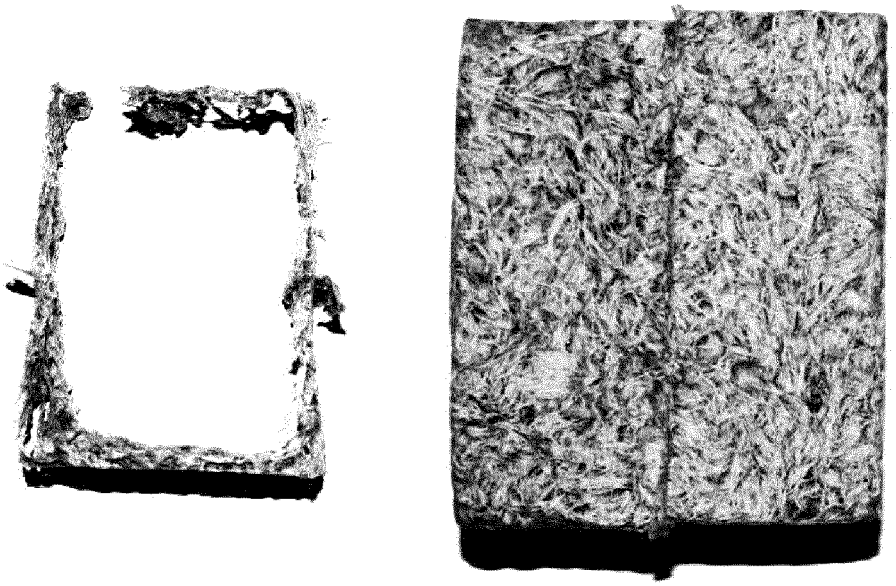

Fig. 9

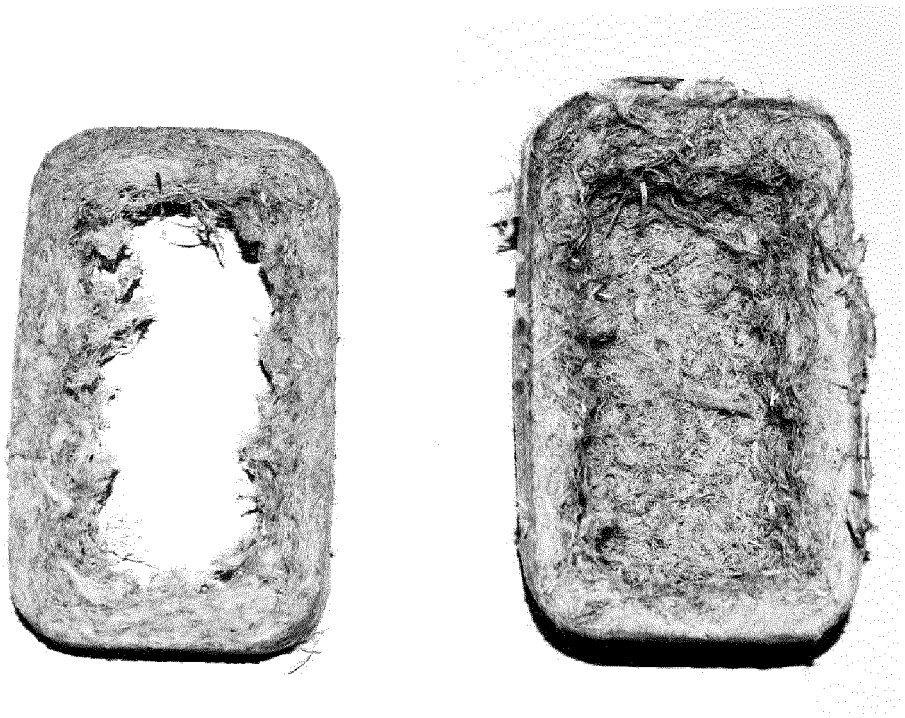

Fig. 10

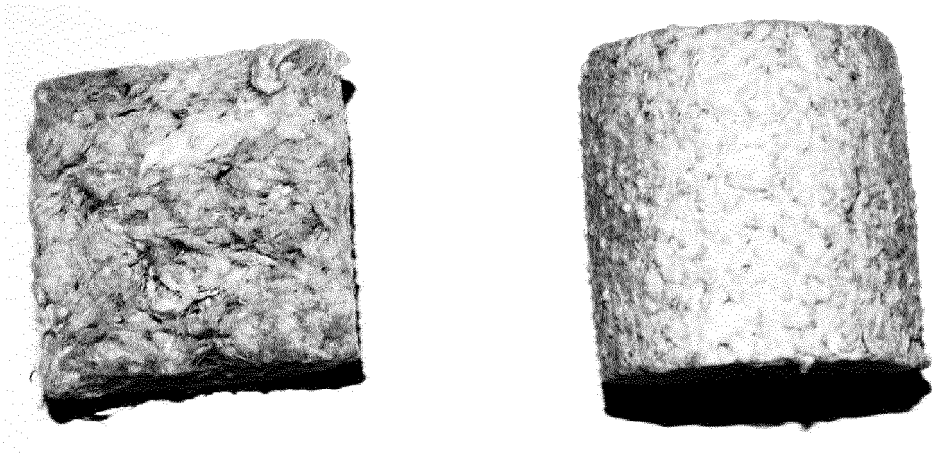

Fig. 11

Europäisches Patentamt
European Patent Office
Office européen des brevets

EUROPEAN SEARCH REPORT

Application Number
EP 22 15 4829

DOCUMENTS CONSIDERED TO BE RELEVANT

Category	Citation of document with indication, where appropriate, of relevant passages	Relevant to claim	CLASSIFICATION OF THE APPLICATION (IPC)
X	US 2001/024716 A1 (CHEN FUNG-JOU [US] ET AL) 27 September 2001 (2001-09-27)	27,28	INV. D21J3/00
A	* paragraphs [0079], [0087], [0133], [0140], [0160], [0196]; figures *	1-26	

A	WO 2018/237279 A1 (MAT NV [BE]; MAT USA LLC [US]) 27 December 2018 (2018-12-27) * paragraphs [0009], [0070], [0085]; figures *	1-28	

TECHNICAL FIELDS SEARCHED (IPC)

D21J

The present search report has been drawn up for all claims

Place of search	Date of completion of the search	Examiner
Munich	21 June 2022	Pregetter, Mario

CATEGORY OF CITED DOCUMENTS

X : particularly relevant if taken alone
Y : particularly relevant if combined with another document of the same category
A : technological background
O : non-written disclosure
P : intermediate document

T : theory or principle underlying the invention
E : earlier patent document, but published on, or after the filing date
D : document cited in the application
L : document cited for other reasons
.....
& : member of the same patent family, corresponding document

1

EPO FORM 1503 03.82 (P04C01)

ANNEX TO THE EUROPEAN SEARCH REPORT ON EUROPEAN PATENT APPLICATION NO. EP 22 15 4829

This annex lists the patent family members relating to the patent documents cited in the above-mentioned European search report.
The members are as contained in the European Patent Office EDP file on
The European Patent Office is in no way liable for these particulars which are merely given for the purpose of information.

21-06-2022

Patent document cited in search report	Publication date	Patent family member(s)	Publication date
US 2001024716 A1	27-09-2001	AR 016990 A1	01-08-2001
		AU 746047 B2	11-04-2002
		BR 9910660 A	30-01-2001
		CN 1310741 A	29-08-2001
		CO 5090910 A1	30-10-2001
		EP 1082380 A1	14-03-2001
		HK 1039625 A1	03-05-2002
		JP 2002516368 A	04-06-2002
		KR 20010025076 A	26-03-2001
		US 6261679 B1	17-07-2001
		US 2001024716 A1	27-09-2001
		US 2003220039 A1	27-11-2003
		WO 9961518 A1	02-12-1999
		ZA 200006424 B	14-05-2001
WO 2018237279 A1	27-12-2018	EP 3642417 A1	29-04-2020
		US 2022002951 A1	06-01-2022
		WO 2018237279 A1	27-12-2018

EPO FORM P0459

For more details about this annex : see Official Journal of the European Patent Office, No. 12/82

REFERENCES CITED IN THE DESCRIPTION

This list of references cited by the applicant is for the reader's convenience only. It does not form part of the European patent document. Even though great care has been taken in compiling the references, errors or omissions cannot be excluded and the EPO disclaims all liability in this regard.

Patent documents cited in the description

- US 2001024716 A1 **[0008]**
- WO 2018237279 A **[0009]**

Non-patent literature cited in the description

- **BURKE et al.** Properties of lightweight fibrous structures made by a novel foam-forming technique. *Cellulose,* 2019, vol. 26, 2529-2539 **[0004]**
- **TIMOFEEV et al.** Drying of foam-formed mats from virgin pine fibers. *Drying Technology,* 2016, vol. 34 (10), 1210-1218 **[0005]**
- **ALIMADADI et al.** 3D-oriented fiber networks made by foam forming. *Cellulose,* 2016, vol. 23, 661-671 **[0006]**