Jan. 13, 1959 C. E. HUNZIKER 2,868,379

SPRAYING MEANS

Filed June 5, 1956 3 Sheets-Sheet 1

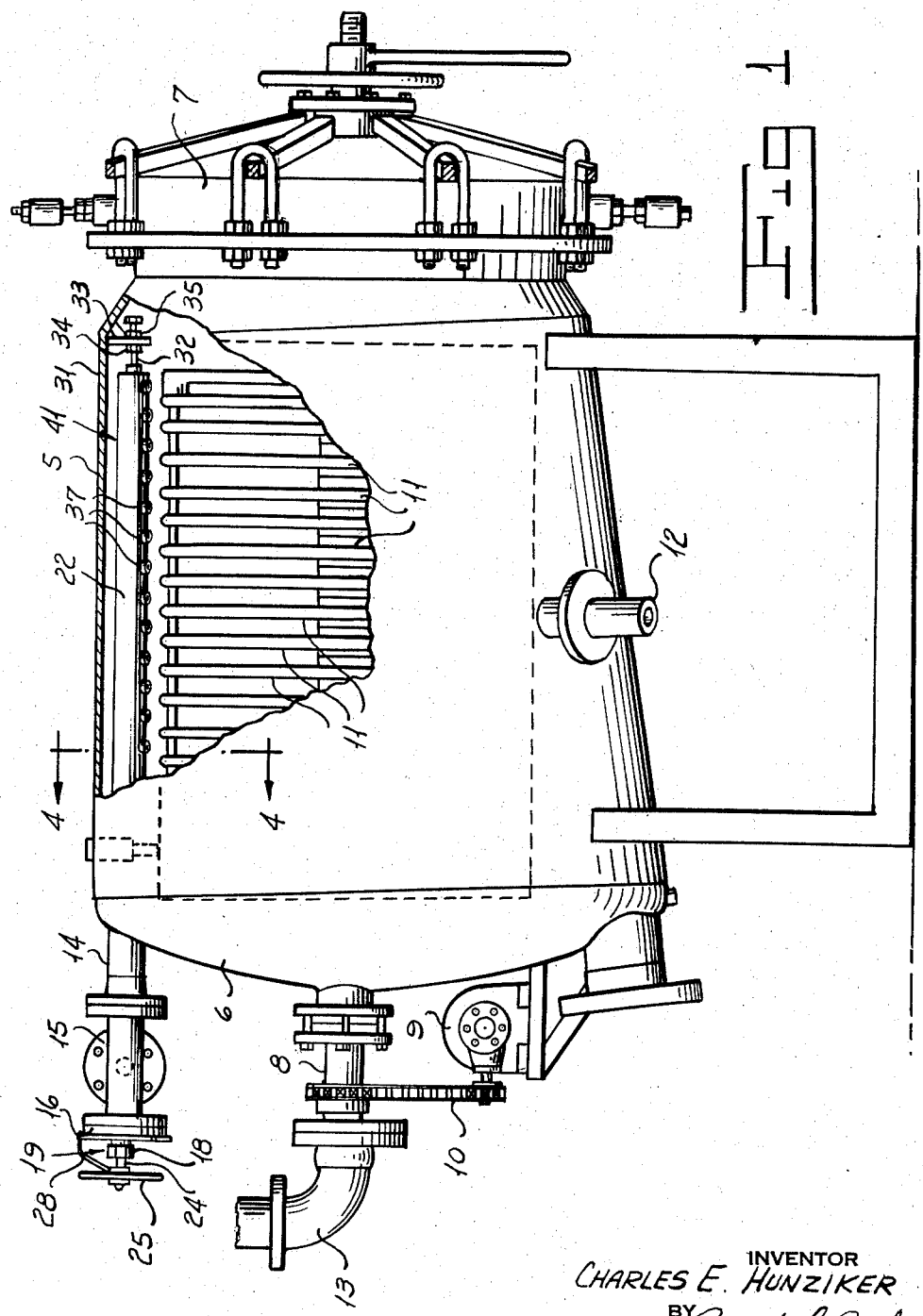

INVENTOR
CHARLES E. HUNZIKER
BY
Robert F. Beck
ATTORNEY

Jan. 13, 1959 C. E. HUNZIKER 2,868,379

SPRAYING MEANS

Filed June 5, 1956 3 Sheets-Sheet 2

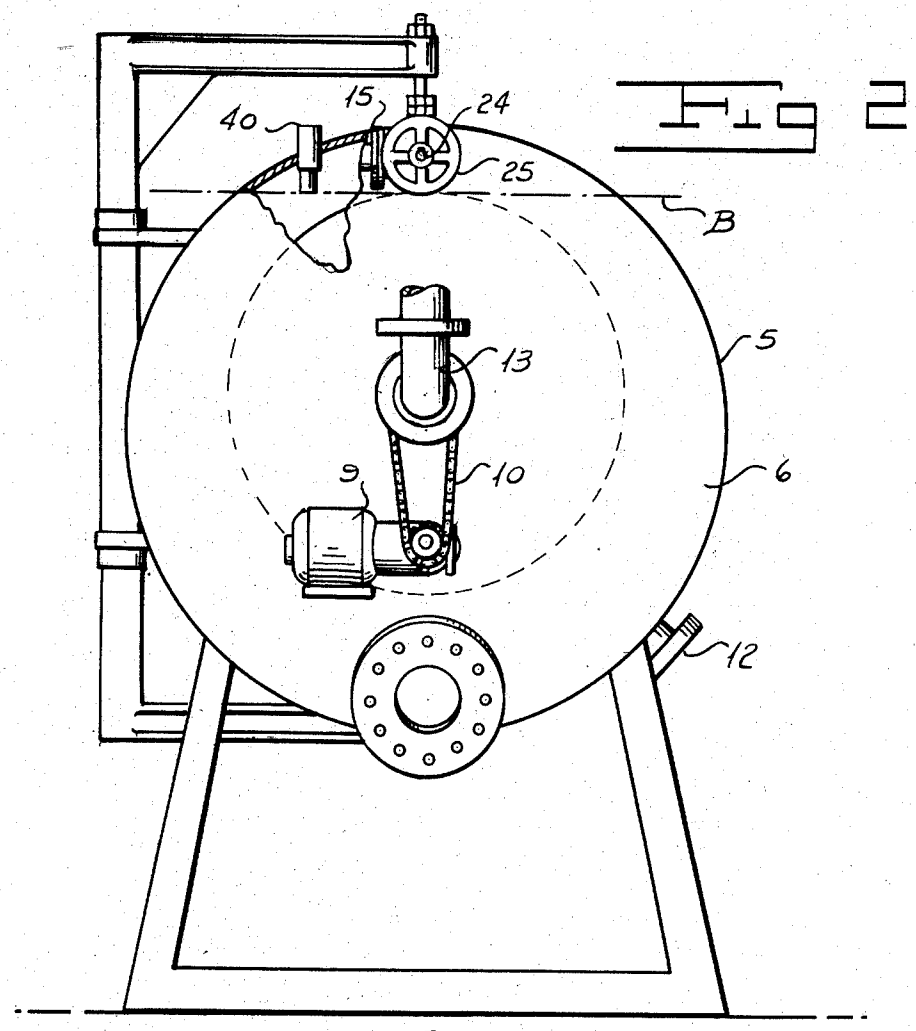

Fig 2

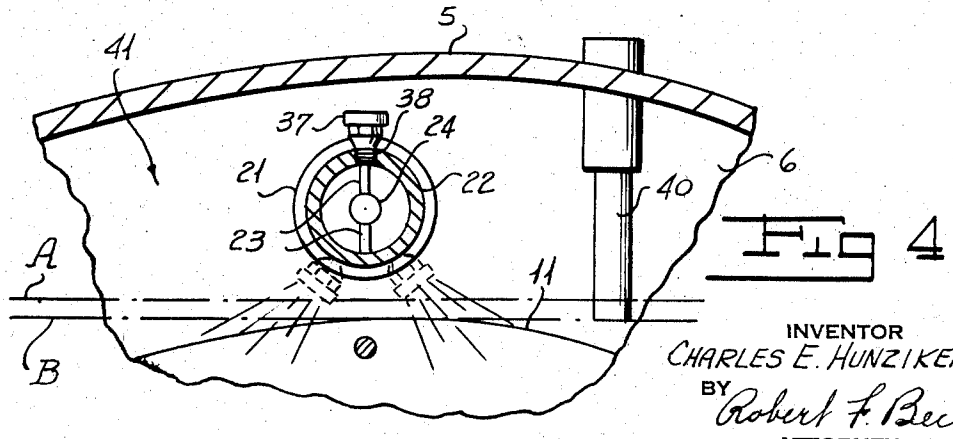

Fig 4

INVENTOR
CHARLES E. HUNZIKER
BY Robert F. Beck
ATTORNEY

Jan. 13, 1959 C. E. HUNZIKER 2,868,379

SPRAYING MEANS

Filed June 5, 1956 3 Sheets-Sheet 3

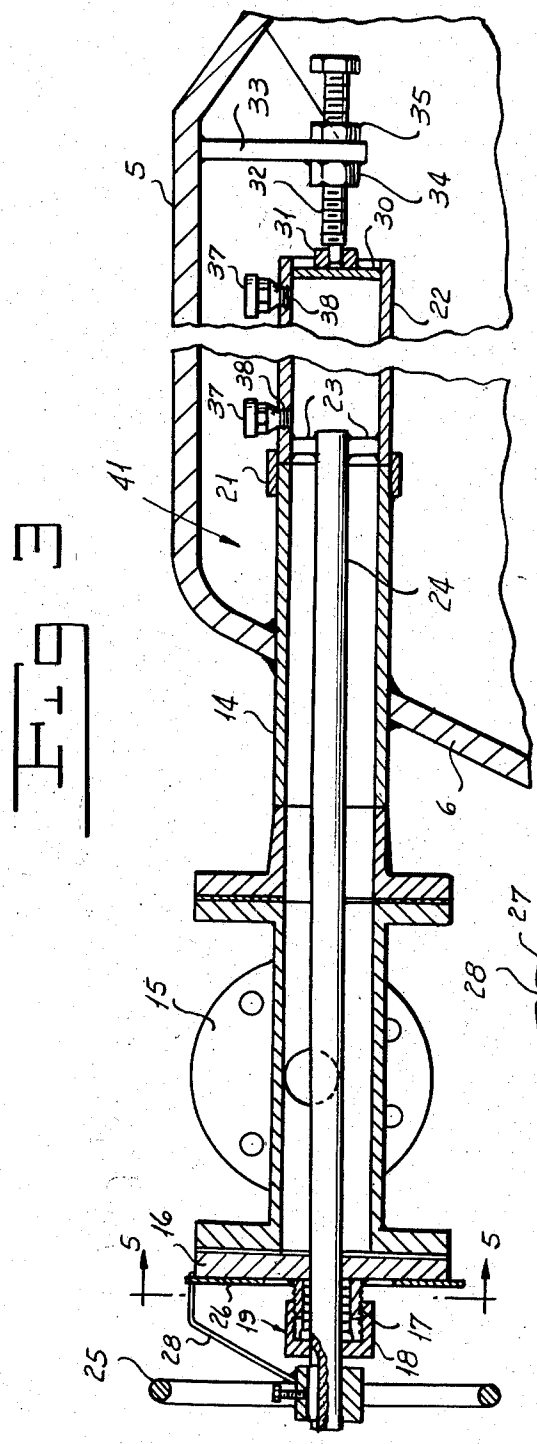

FIG. 5

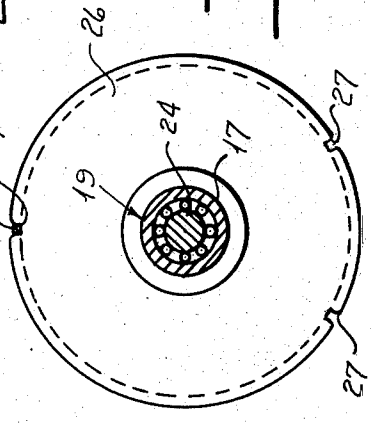

INVENTOR
CHARLES E. HUNZIKER
BY Robert F. Beck
ATTORNEY

United States Patent Office 2,868,379 Patented Jan. 13, 1959

2,868,379

SPRAYING MEANS

Charles E. Hunziker, Ridgewood, N. J.

Application June 5, 1956, Serial No. 589,511

8 Claims. (Cl. 210—91)

One of the objects of my invention is to provide a pressure leaf filter equipped with means for effecting cleaning of the leaves of the filter pack and which means is so arranged and operated with respect to the leaves as to insure maximum cleaning and operating efficiency.

Another object of my invention is to provide a pressure leaf filter of the foregoing described character wherein spray nozzles are employed for cleaning the leaves of the filter pack and which nozzles are arranged an appreciable distance from the leaves and isolated with respect to the liquid being filtered by the leaves to thus prevent clogging of the nozzles by said liquid.

A further object of my invention is to provide a pressure leaf filter of the foregoing described character wherein an air pocket or chamber is provided superjacent the filter pack and in which chamber is disposed a conduit or a header equipped with the spray nozzles to thus protect the nozzles from liquid forced into the filter casing for filtering by the leaves.

An important object of my invention is to provide a pressure filter of the foregoing described character wherein the header is rotated within the chamber to direct spray from the nozzles upon the leaves over desired portions thereof and to position the nozzles within the upper zone of the chamber when not in use, and thus effect maximum protection with respect to clogging.

Another object of my invention is to provide a filter of the foregoing described character which is simple in construction, durable in use, efficient in operation, economical in manufacture, and which lends itself to ready assembly and disassembly with respect to the header and associated components.

With the above and other objects in view, as will hereinafter appear, the invention consists in the combination and arrangement of parts hereinafter set forth and illustrated in the accompanying drawings from which the several features of the invention and the advantages attained thereby will be readily understood by those skilled in the art.

Referring to the drawings wherein like reference characters designate like parts throughout the several views:

Figure 1 is a side elevation, partly in section, of a filter equipped with my invention.

Figure 2 is an end elevation, partly in section, of the filter.

Figure 3 is a fragmentary longitudinal section on an enlarged scale.

Figure 4 is a detail sectional view taken on the line 4—4 of Figure 1.

Figure 5 is a sectional view taken on the line 5—5 of Figure 3.

In practicing my invention, as illustrated in the drawings, I provide a pressure leaf filter of the rotary leaf type comprising an outer cylindrical casing or shell 5 mounted above a suitable base, the ends of the casing being closed by a wall 6 at one end and a door 7 at the opposite end. Extending into the casing 5, through the wall 6, for rotation within the casing, is a hollow shaft 8 drivingly connected to a reversible motor 9 by means of a pulley and belt assembly 10 or the like, the motor being secured to a platform fixed to the end 6. A filter pack is mounted upon the shaft 8, within the casing 5, for rotation by the shaft and is fashioned with a plurality of spaced discal filter leaves 11 each provided with a peripheral portion to which the outer ends of screening is secured to filter liquid introduced into the casing, under pressure, through an inlet 12. In this type of filter, the leaves 11 are precoated with a suitable filtering medium contained in a liquid, the latter being filtered through the coated screening into the interior of the leaves and thence discharged from the leaves through the hollow shaft into an outlet pipe 13 connected to the shaft as is the practice in such construction. Inasmuch as the leaves 11 and the foregoing described components are of ordinary constructions, and form no part of the present invention per se, a more detailed description thereof is not deemed necessary.

Above the filter pack, the wall 6 has fixed thereto and extending therethrough a pipe or sleeve 14 having its outer end connected to an outlet side of a T 15. The opposite side of the T 15 has bolted thereto a flange 16 equipped with an exteriorly threaded collar 17 on which is threaded a packing nut 18 of a packing gland or stuffing box 19. The inlet side of the T 15 is connected to a supply pipe for a suitable fluid for cleaning the leaves 11 as hereinafter more fully described. The inner end of the sleeve 14 has fixed thereabout a collar 21 extending outwardly from said inner end and coacting with the latter to form a seat which accommodates therein one end of a header or conduit 22.

The end of the header 22, adjacent the collar 21, has disposed therein a plurality of spaced radial arms 23 having their outer and inner ends fixed to the interior face of the header and to the inner end of a rotatable operating rod 24, respectively. The rod extends through the sleeve 14, T 15, flange 16 and box 19 and has its opposite or outer end projecting beyond the lock nut 18 and equipped with a hand wheel 25. The flange 16 has fixed thereto a disc 26 provided on its peripheral face with circumspaced notches 27 for selectively receiving therein the outer end of a flexible indicating finger 28 affixed to the hand wheel 25, whereby, the notches cooperate with the finger to denote various rotational positions of the rod as hereinafter more fully described.

The opposite end of the header 22 is closed by means of an end plate 30 fixed therein and provided on its outer face with a seat-ring 31 in which is normally accommodated the dog point of a set-screw or bolt 32 extending through a depending bracket 33 fixed to the top wall of the casing, the bracket 33 being equipped with a nut 34 through which the bolt 32 is threaded. The bolt 32 is provided with a lock nut 35 to maintain the bolt against accidental movement relative to the header and thus maintain the header against longitudinal movement between the sleeve 14 and the bracket 33 while permitting rotation of the head upon manipulation of the hand wheel 25. The header, on its peripheral face, is provided with lengthwise aligned spaced nozzles 37 for spraying fluid onto the radial faces of the leaves to clean the same, the nozzles having shanks 38 threaded in the header as clearly disclosed in the drawings.

Means is provided to preclude clogging of the nozzles 37 by the liquid to be filtered during filtering operations, said means including positioning the header within the uppermost zone of the casing above the filter pack to position the outer ends of the nozzles an appreciable distance above the leaves when the nozzles are in their lowermost operating positions, as indicated by the dot and dash nozzle line A, disposing the tops of the leaves 11 an appreciable distance below the topmost point of the inner circumferential face of the casing 5, as indi-

cated by the dot and dash liquid level line B, and extending a vent pipe **40** into the casing **5** through the top thereof and terminating the inner end of the pipe **40** in a plane substantially coincident with that of the tops of the leaves as defined by the liquid level line B. Thus, when liquid under pressure is introduced into the casing **5** through the inlet **12** for filtering by the leaves **11**, the vent pipe **40** serves to vent liquid tending to rise above the liquid level line B and thus maintain the level of the liquid along the tops of the leaves thereby establishing or providing an air pocket or chamber **41** within the casing above the leaves in which are disposed the spray nozzles. Obviously, liquid forced into the casing for filtering by the leaves will be precluded from reaching and clogging the spray nozzles by the filtering medium contained in said liquid.

In use—assuming that a filtering operation has been completed, the inlet **12** closed, the nozzles **37** disposed in their uppermost positions adjacent the top of the casing, and the casing drained—the header is rotated to dispose the nozzles in one of the spraying positions, for instance, in proximity to the dextral side of the casing with respect to Figure 4 of the drawings. In this position of the nozzles, the leaves are rotated counterclockwise and fluid introduced into the header from the supply pipe and sprayed by the nozzles upon the radial faces of the leaves to effect cleaning thereof. In some instances, in order to insure a thorough cleaning, the header is moved to position the nozzles in proximity to the sinistral side of the casing and the leaves rotated clockwise by reversing the motor **9**. During cleaning of the leaves, the header may be oscillated to move the nozzles from side to side during rotation of the leaves in any direction, thus effecting not only a cleaning but a rinsing of the leaves. When the leaves have thus been cleaned, the flow of fluid through the header is cut off and the header rotated to position the nozzles in proximity to the top of the casing or pocket **41** to insure maximum protection against clogging during a subsequent filtering operation. From the foregoing, it will be apparent that the header is moved in a manner to position the nozzles for spraying the leaves as the latter rotate towards the nozzles, it being noted that the respective notches **27** in the disc **26** indicate the uppermost position of the nozzles during filtering operations and the dextral and sinistral position of the nozzles during counter-clockwise and clockwise rotation of the leaves with respect the sides of the casing as shown in Figure 4. Inasmuch as the finger **28** moves in unison with the rod **24** it coacts with the notches to indicate the positions of the nozzles within the casing thus serving as a tell-tale for the operator in the manipulation of the header.

When it is desired to remove the header **14** from the casing, the hand wheel is removed from the rod **24**, nut **18** on the stuffing box **19** loosened, flange **16** disconnected from the T **15**, lock nut **35** loosened on the bolt **32** and the latter backed away from the plate **30** of the header whereupon the end of the header is withdrawn from within the collar **21**, tilted and removed together with the rod **24** through the door **7**. A reverse of the foregoing operations serves to assemble the header within the casing for use.

Without further elaboration, the foregoing will so fully explain the invention that others may, by applying current knowledge, readily adapt the same for use under various conditions of service. Moreover, it is not indispensable that all the features of the invention be used conjointly since they may be employed advantageously in various combinations and subcombinations.

It is obvious that the invention is not confined solely to the use herein disclosed in connection therewith as it may be utilized for any purpose to which it is adaptable. It is therefore to be understood that the invention is not limited to the specific construction as illustrated and described, as the same is only illustrative of the principles involved which are capable of extended application in various forms, and the invention comprehends all construction within the scope of the appended claims.

What I claim is:

1. In a filter construction, a casing provided with a filter pack spaced from the top of said casing and equipped with a liquid vent so arranged as to define a high level for liquid to be filtered by said pack and with said level being substantially coincident with the top of said pack, said vent being effective to preclude the rise of liquid above said level, to thus provide an air chamber within said casing above said pack, said casing being equipped with a header deposed within said chamber between the tops of said casing and said pack, said header being provided with spray nozzles terminating within the confines of said chamber for discharging cleaning fluid from said header onto the leaves of said pack.

2. In a filter construction, a casing provided with a rotatable filter pack spaced from the top of said casing and equipped with a liquid vent so arranged as to define a high level for liquid to be filtered by said pack and with said level being substantially coincident with the top of said pack, said vent being effective to preclude the rise of liquid above said level, to thus provide an air chamber within said casing above said pack, said casing being quipped with a header deposed within said chamber between the top of said casing and said pack, said header being provided with spray nozzles terminating within the confines of said chamber for discharging cleaning fluid from said header onto the leaves of said pack, and manually actuated means connected to said header and arranged outside of said pack for rotating said header to various selected positions within said chamber.

3. In a filter construction, a casing provided with a filter pack spaced from the top of said casing and equipped with a liquid vent pipe extending into said casing and terminating therein at a height to define a high level for liquid to be filtered by said pack and with said level being substantially coincident with the top of said pack, said pipe being effective to preclude the rise of liquid above said level, to thus provide an air chamber within said casing above said pack, a conduit, spray nozzles connected to said conduit and being confined solely within said chamber for discharging cleaning fluid from said nozzles onto the leaves of said pack, said conduit being shiftable within said casing and relative to said leaves for directing the spray from said nozzles over preselected areas of said leaves.

4. In a filter construction, a casing provided with a filter pack spaced from the top of said casing and equipped with a liquid vent pipe extending into said casing and terminating therein at a height to define a high level for liquid to be filtered by said pack and with said level being substantially coincident with the top of said pack, said pipe being effective to preclude the rise of liquid above said level, to thus provide an air chamber within said casing above said pack, a conduit, spray nozzles connected to said conduit and terminating within the confines of said chamber for discharging cleaning fluid from said conduit onto the leaves of said pack, said conduit being rotatable within said casing for directing the spray from said nozzles over preselected areas of said leaves, operating means connected to said conduit for rotating the latter, and indicating means coacting with said operating means for denoting positions of said nozzles in said chamber.

5. In a filter construction, a casing provided with a filter pack spaced from the top of said casing and equipped with a liquid vent so arranged as to define a liquid level for liquid to be filtered by said pack and with said level being substantially coincident with the top of said pack, said vent being effective to preclude the rise of liquid above the top of said pack, to thus provide an air chamber within said casing above said pack, and spray means mounted within the confines of said chamber

and above said pack for discharging cleaning fluid from outside of said casing onto the leaves of said pack, said spray means being adjustable within said chamber to confine the discharge of the fluid to preselected portions of said leaves.

6. In combination, a filter casing provided with a filter pack disposed within and spaced from the top of said casing, a liquid inlet conduit extending into said casing and having an outlet end terminating within said casing, a header interposed between the top of said casing and the top of said pack and having open and closed ends with said open end being detachably connected to said outlet end for establishing communication between said conduit and said header, a support means carried by said casing and equipped with manually actuated means detachably connected to said closed end and coacting with said conduit for maintaining said header in connected relation with said conduit above said pack, said header being provided with spray nozzles disposed over said pack for discharging cleaning liquid from said header onto the leaves of said pack for cleaning the latter, said manually actuated means being operable to effect detachment of said closed end from said supporting means to permit said header to be disconnected from said conduit for removal from said casing.

7. In combination, a filter casing provided with a filter pack disposed within and spaced from the top of said casing, a liquid inlet conduit extending into said casing and having an outlet end terminating within said casing, a header interposed between the top of said casing and the top of said pack and having open and closed ends with said open end being detachably and

rotatably connected to said outlet end for establishing communication between said conduit and said header, support means carried by said casing and detachably connected to said closed end for maintaining said header in connected relation with said conduit above said pack, said header being provided with spray nozzles disposed over said pack for discharging cleaning liquid from said header onto the leaves of said pack for cleaning the latter, said support means including manually actuated means for detaching said closed end from said supporting means to permit said header to be disconnected from said conduit for removal from said casing, and a member extending through said conduit and connected to said header for rotating the latter within said casing to shift said nozzles to various positions relative to said pack.

8. The structure of claim 7 as set forth and defined therein including, a liquid vent pipe extending downwardly into said casing and terminating therein below said nozzles and above said pack for venting liquid to preclude the rise thereof above the top of said pack.

References Cited in the file of this patent

UNITED STATES PATENTS

1,370,469	Martel	Mar. 1, 1921
1,446,448	Brown	Feb. 27, 1923
1,510,568	Sweetland	Oct. 7, 1924
1,764,155	Daniels	June 17, 1930
2,406,065	Dickinson et al.	Aug. 20, 1946
2,711,465	Sanborn	June 21, 1955
2,731,157	Purmort	Jan. 17, 1956