No. 768,288. PATENTED AUG. 23, 1904.

E. W. KELLY.

INTERRUPTER.

APPLICATION FILED MAR. 28, 1904

NO MODEL. 2 SHEETS—SHEET 1.

Fig 1.

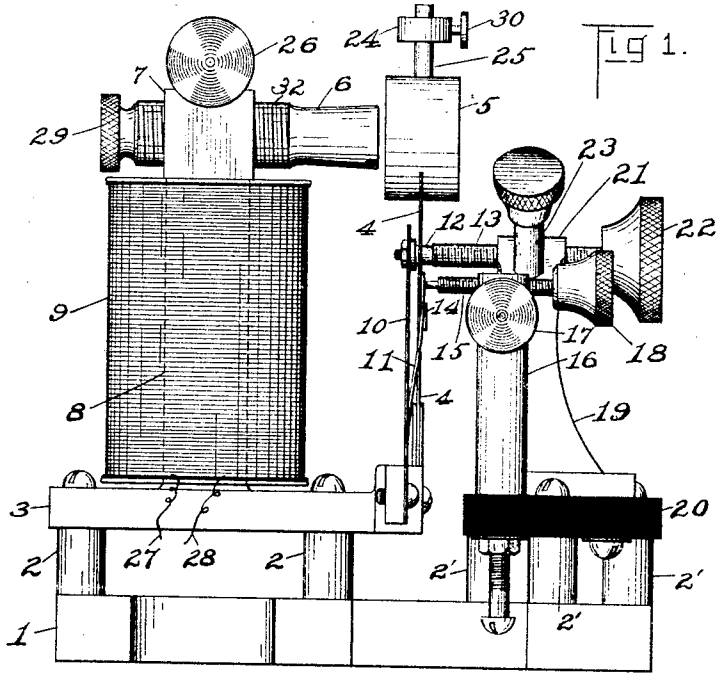

Fig 2.

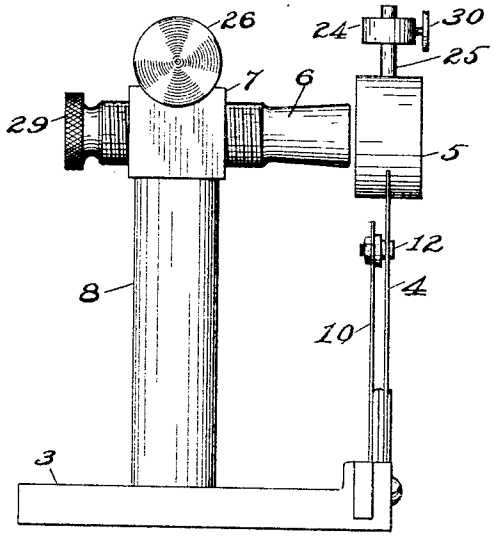

Fig 3.

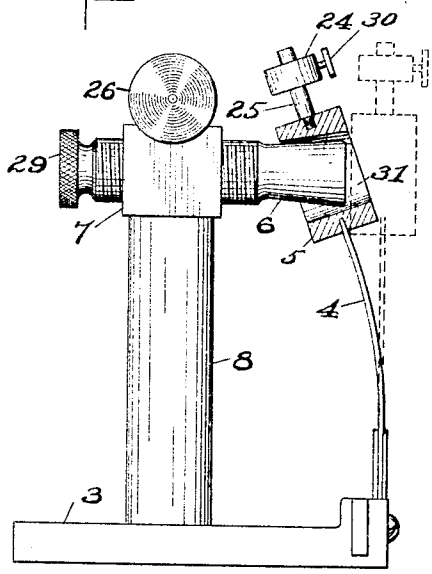

Witnesses
James M. Sawyer.
Lilian M. Creamer

Inventor
Edwin W. Kelly
By Cornelius J. Ehret
his Attorney

No. 768,288. PATENTED AUG. 23, 1904.

E. W. KELLY.

INTERRUPTER.

APPLICATION FILED MAR. 28, 1904.

NO MODEL. 2 SHEETS—SHEET 2.

Fig 4.

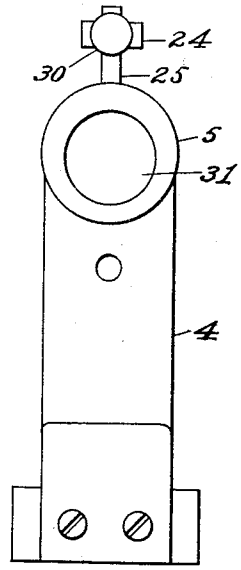

Fig 5.

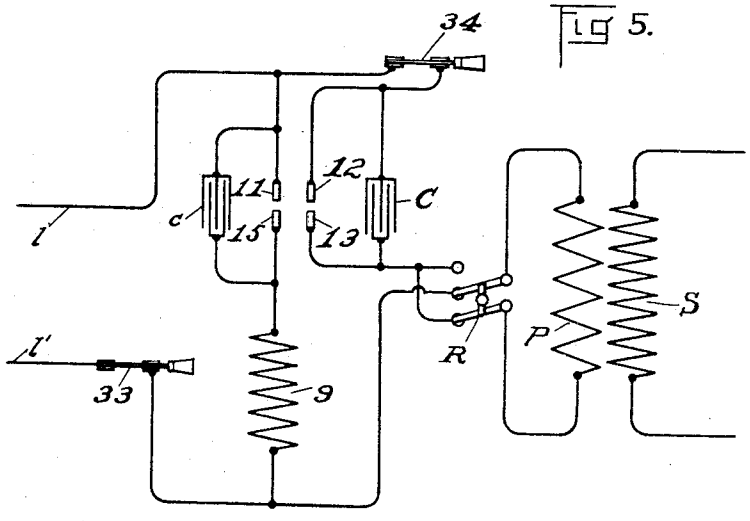

Witnesses
James M. Sawyer.
W. Hamilton

Inventor
Edwin W. Kelly
by Cornelius D. Ehret
his Attorney

No. 768,288. Patented August 23, 1904.

UNITED STATES PATENT OFFICE.

EDWIN W. KELLY, OF PHILADELPHIA, PENNSYLVANIA, ASSIGNOR TO ROENTGEN MANUFACTURING COMPANY, OF PHILADELPHIA, PENNSYLVANIA, A CORPORATION OF PENNSYLVANIA.

INTERRUPTER.

SPECIFICATION forming part of Letters Patent No. 768,288, dated August 23, 1904.

Application filed March 28, 1904. Serial No. 200,354. (No model.)

To all whom it may concern:

Be it known that I, EDWIN W. KELLY, residing at Philadelphia, in the city and county of Philadelphia and State of Pennsylvania, have invented a new and useful Interrupter, of which the following is a specification.

My invention relates to means for interrupting the circuit of the primary winding of a Ruhmkorff or induction coil, such as employed in X-ray work, wireless telegraphy, or any other art.

My invention consists of a self-starting interrupter for induction-coils and the like, and comprises a magnetic circuit which is practically entirely through iron or steel.

My invention consists of a practically closed magnetic-circuit self-starting interrupter, whose exciting-coil may be included in the circuit to be interrupted or, preferably, in an independent circuit, in which latter case the moving element of the interrupter is caused to break two independent circuits, one of them including the exciting-coil of the interrupter, the other including the primary of the induction-coil.

In the case of interrupters heretofore used on induction-coils of large capacity it has been necessary to start the vibrating member by hand or otherwise, such member after having been once started continuing in motion under the influence of the magnet. This necessity for manual starting is a disadvantage, especially in X-ray work and wireless telegraphy, where it is essential that the vibrator shall immediately be set in motion upon each closure of the circuit of the exciting-coil.

My invention consists also of other features hereinafter described.

Reference is to be had to the accompanying drawings, in which—

Figure 1 is a side view of a form of interrupter embodying my invention. Fig. 2 is a side view of a portion of the interrupter. Fig. 3 is a side view, part in section, of parts of Fig. 2, the vibrator being shown in deflected position. Fig. 4 is a front view in elevation of the movable portion of the magnetic circuit. Fig. 5 is a diagrammatic view of the circuits of the interrupter and induction-coil.

At 1 is shown a subbase, preferably of non-magnetic metal, having the posts 2 2 integral therewith and also the three posts 2′ integral with it. Upon the posts 2 2 is secured by screws the horizontally-disposed member 3, of iron.

4 is a steel vibrator member of considerable thickness and of considerable width. The vibrator 4 is secured at its lower end to the member 3, being held between two short pieces of spring-steel. The member 5 is secured at the upper end of the vibrator 4 and consists of a hollow cylinder of iron adapted to embrace or pass over the conically-shaped pole-piece 6, formed on the end of an iron member 32, engaging by screw-threads in the split head 7 of the magnet-core 8. The milled head 29 serves to adjust the pole-piece 6 toward or from the armature member 5, and the thumb-screw 26 serves to clamp the member 6 in the desired position.

The pole-piece is made conical, as shown, in order to accommodate the armature 5 when in its deflected position. To this end the armature 5 is also conical in shape in its interior and upper side, as shown in Fig. 3. The bore 31 is partly conical and partly simply cylindrical.

9 is the magnet-winding surrounding the core 8, the terminals of the winding being shown at 27 and 28, respectively.

As seen in Fig. 2, the magnetic circuit of the interrupter comprises the member 3, vibrator 4, armature 5, pole-piece 6, head 7, and core 8. There is of course an air-gap between 5 and 6; but the reluctance of such air-gap is quite small, and the reluctance of the entire magnetic circuit is relatively small, since the cross-sections of the metal parts are relatively great. The spring 4 being relatively thick and wide and relatively short has relatively small reluctance and affords a good path for lines of force. With the parts in the position as shown in Fig. 1 the reluctance of the magnetic circuit is practically at

its minimum, with the result that the maximum pull or maximum magnetic force acting on the armature 5 occurs when it is in its normal position of rest. Immediately upon the closure of the circuit through the coil 9 this maximum attractive force is exerted upon the armature 5, and it is drawn toward the pole-piece 6, and when the armature 5 begins to inclose the pole-piece 6 the reluctance of the magnetic circuit does not further materially decrease and the pull on the armature 5 ceases. The momentum gained, however, carries armature 5 slightly over the pole-piece 6, at which time the circuit through the coil 9 is broken at contacts 11 and 14 and the armature returns and passes slightly beyond its position of rest. At this time, however, coil 9 is again energized and the armature 5 attracted again until the point where it just begins to embrace or inclose the pole-piece 6. It continues, due to its momentum, and embraces the pole-piece 6 by a considerable amount. The cycle of operation is repeated, the armature swinging through greater and greater amplitudes, the magnetic attraction operating, however, only to the point where the armature 5 begins to embrace the pole-piece 6. From the fact that the maximum pull on the armature 5 occurs when it is in its position of rest the interrupter is self-starting and accelerates very quickly.

It is not essential that the armature member shall embrace or inclose the pole-piece, for the equivalent arrangement of pole-piece inclosing or embracing the armature member may be adopted. Furthermore, any other structure permitting of the maximum pull upon the armature member when in its position of rest and permitting the continued movement of the armature member after the maximum pull has been exerted may be employed in place of the armature 5 and pole-piece 6, as herein shown.

The contact 12, of platinum, as usual, is secured to the spring 10, itself secured to the member 3. The spring 10 is, however, independent of the vibrator 4, and the contact 12 extends through the spring 4 without being touched thereby. The contact 12 coöperates with the platinum contact on the screw 13, having the milled head 22 serving for adjustment of the duration of contact between 12 and 13. The screw 13 engages in the head 21 of the bracket 19, secured to the rubber base 20, which is in turn secured to the posts 2′. The head 21 is split and provided with a clamping-screw 23, which serves to clamp the screw 13 in any desired position. The contacts 12 and 13 are in the circuit of the primary of the induction-coil.

A spring 11, secured at its lower end to the member 3, carries at its upper end a platinum contact, which engages a platinum contact in the end of the adjusting-screw 15, engaging in the post 16, which is also mounted upon the rubber base 20. The top of the post 16 is split, and the thumb-screw 17 serves to clamp the screw 15 in any desired position. These last-mentioned contacts on 11 and 15 are in the circuit of the coil 9.

14 is a bar secured to the vibrator 4 and extends horizontally to a position in front of the spring 11.

The operation of the device is as follows: With the parts at rest, as shown in Fig. 1, upon the closure of the circuit of the coil 9 such coil energizes the magnetic circuit, causing the attraction of the armature 5, such attraction being very powerful, since the reluctance of the magnetic circuit is very low. In consequence the armature 5 is promptly started and quickly gains full amplitude of vibration. In this motion of the armature 5 toward the pole-piece 6 the spring 4 engages the spring 10, deflecting it toward the left also, thus carrying contact 12 away from 13 and breaking the primary circuit of the induction-coil. During this same motion of the armature 5, however, the bar 14 engages in the spring 11, deflecting it also, and thus breaking circuit between 11 and 15, or, in other words, breaking the circuit of the coil 9. Instantly the armature 5 is returned the contact between 12 and 13 and the contact between 11 and 15 are again restored. Immediately, however, the same cycle of operation is repeated, so that the primary circuit of the induction-coil is repeatedly closed and interrupted.

Secured to the armature 5 is the upwardly-extending rod 25, carrying a weight 24, adjustable to any position on the rod 25 by means of the screw 30. This adjustable weight serves to adjust the natural period of vibration of the system and to add to its inertia, which will insure positiveness and suddenness in the break of the circuits.

Referring to Fig. 5, 1 and 1′ are conductors leading from any suitable source of energy. 33 is any suitable switch adapted to close or interrupt connection with said source of energy. Connected across the conductors 1 and 1′ are the windings 9 of the interrupter and the contacts 11 and 15. In shunt to the contacts 11 and 15 is connected a small condenser *c*, adapted to reduce sparking at contacts 11 and 15 in a well-known manner. The contacts 12 and 13, also controlled by the movable member of the interrupter, are connected in series with the switch 34 and the primary P of an induction-coil whose secondary is represented at S. R is a reversing-switch or pole-changer for changing the direction of current through the primary P. C is a condenser in shunt to contacts 12 and 13 for the purpose of reducing sparking in a well-known manner. In starting the apparatus switch 33 is closed first, and instantly the interrupter

starts and quickly gains full amplitude. Then switch 34 is closed, whereupon an interrupted or intermittent current flows through the primary P, producing currents of high potential in the secondary circuit, as well known in the art.

What I claim is—

1. In an interrupter for induction-coils, a practically closed magnetic circuit, an exciting-coil associated with said magnetic circuit and energizing the same, and a plurality of pairs of contacts controlled by a movable portion of said magnetic circuit, said movable portion being subjected to practically maximum magnetic force when in position of rest.

2. In a self-starting interrupter for induction-coils, a practically closed magnetic circuit, comprised in part of an armature member adapted to inclose a pole-piece as said armature is deflected, and a winding for energizing said magnetic circuit.

3. In an interrupter for induction-coils, a practically closed magnetic circuit, an exciting-winding associated therewith, and a pair of contacts controlled by a movable portion of said magnetic circuit, said movable portion being subjected to practically maximum magnetic force when in position of rest, whereby the interrupter is self-starting.

4. In an interrupter for induction-coils, a practically closed magnetic circuit, an exciting-coil for energizing the same, a movable portion of said magnetic circuit comprising a spring, said movable portion being acted upon most strongly when in a position approximately that of rest, and a contact controlled by said spring for interrupting a circuit of an induction-coil.

5. In an interrupter for induction-coils, a practically closed magnetic circuit, a winding for energizing the same, a pole-piece, a movable portion of said magnetic circuit comprising a spring, an armature member carried by said spring and adapted to inclose said pole-piece as said armature is deflected, said spring and armature comprising a hammer for controlling a contact in a circuit of an induction-coil.

6. In an interrupter for induction-coils, a practically closed magnetic circuit, an exciting-winding for energizing the same, a movable member of said magnetic circuit subjected to approximately maximum magnetic force when in position of rest, a pair of contacts controlling the circuit of said winding, and a pair of contacts controlling a circuit of an induction-coil, said movable member controlling said pairs of contacts.

7. In an interrupter for induction-coils, a practically closed magnetic circuit, a winding for energizing the same, and a movable portion of said magnetic circuit subjected to approximately maximum magnetic force when in position of rest and serving simultaneously to afford a path for the magnetism and to resiliently oppose its own motion, and a contact in a circuit of an induction-coil controlled by said movable member.

8. In an interrupter for induction-coils, a practically closed magnetic circuit, a winding for energizing the same, a movable portion of said magnetic circuit comprising a spring and subjected to approximately maximum magnetic force when in position of rest, a pair of contacts in a circuit of an induction-coil and controlled by said movable member, and means for adjusting the duration of engagement of said contacts, said duration of engagement being independent of said movable member.

9. In an interrupter for induction-coils, a practically closed magnetic circuit, a winding for energizing the same, a movable portion of said magnetic circuit comprising a spring and subjected to approximately maximum magnetic pull when in position of rest, a pair of contacts controlling a circuit of an induction-coil and controlled by said movable member, a pair of contacts controlling the circuit of said winding and controlled by said movable member, and means for independently adjusting the duration of engagement between the contacts of each pair.

10. A self-starting interrupter for induction-coils comprising a practically closed magnetic circuit, a winding for energizing the same, a movable member of said magnetic circuit comprised in part of an armature member adapted to inclose a pole-piece, and means for periodically interrupting the circuit of said winding.

11. In an interrupter for induction-coils, a magnet, an armature member coöperating therewith and subjected to approximately maximum pull by said magnet when in position of rest, and a contact controlled by said armature member.

12. In an interrupter for induction-coils, a magnet, an armature member coöperating therewith and adapted to inclose a portion of said magnet, and a contact controlled by said armature member.

13. In an interrupter for induction-coils, a magnet, an armature coöperating therewith, a spring supporting said armature, said armature being subjected to approximately maximum pull by said magnet when in position of rest, and a contact controlled by said armature.

14. In an interrupter for induction-coils, a magnet, a vibrating armature coöperating therewith and subjected to approximately maximum pull by said magnet when in position of rest, and a contact controlled by said armature.

15. In an interrupter for induction-coils, a magnet, an armature member coöperating therewith and subjected to approximately

maximum pull by said magnet when in position of rest and adapted to inclose a portion of said magnet when moved from position of rest, and a contact controlled by said armature member.

16. A self-starting interrupter for induction-coils comprising a magnet, an armature member coöperating therewith and subjected to approximately maximum pull by said magnet when in position of rest, and a contact controlled by said armature member.

17. A self-starting interrupter for induction-coils comprising a magnet, a vibrating armature coöperating therewith and subjected to approximately maximum pull by said magnet when in position of rest, and a contact controlled by said armature.

18. A self-starting interrupter for induction-coils, comprising a magnet, an armature coöperating therewith, a resilient member supporting said armature, said armature being subjected to approximately maximum pull by said magnet when in position of rest, and a contact controlled by said armature.

19. A self-starting interrupter for induction-coils, comprising a magnet, an armature member coöperating therewith and subjected to approximately maximum pull by said magnet when in position of rest, a contact in the circuit of said magnet controlled by said armature member, and a contact in the circuit of an induction-coil controlled by said armature member.

20. A self-starting interrupter for induction-coils comprising a magnet, an armature member coöperating therewith and subjected to approximately maximum pull by said magnet when in position of rest and adapted to inclose a portion of said magnet when moved from position of rest, and a contact controlled by said armature member.

21. In combination, a source of energy, a winding of an induction-coil supplied thereby, a pair of contacts controlling the circuit of said winding, and a self-starting interrupter for periodically bringing said contacts into engagement comprising a magnet, and an armature member coöperating therewith and subjected to approximately maximum pull by said magnet when in position of rest.

22. A self-starting interrupter for induction-coils comprising a magnet, an adjustable pole-piece, a vibratory armature adapted to inclose said pole-piece, and a contact controlled by said armature.

23. A self-starting interrupter for induction-coils comprising a magnet, an adjustable pole-piece, a vibratory armature coöperating therewith and subjected to approximately maximum pull by said pole-piece when in position of rest, and a contact controlled by said armature.

24. A self-starting interrupter for induction-coils comprising a magnet, a pole-piece, an armature coöperating therewith, said pole-piece having maximum cross-section at the end presented to said armature and diminishing in cross-section toward the magnet-core, and a contact controlled by said armature.

25. A self-starting interrupter for induction-coils comprising a magnet, a pole-piece, an armature coöperating therewith, said pole-piece having maximum cross-section at the end presented to said armature and diminishing in cross-section toward the magnet-core, means for adjusting said pole-piece with respect to said armature, and a contact controlled by said armature.

EDWIN W. KELLY.

Witnesses:
LILIAN M. CREAMER,
C. D. EHRET.